HIGHLAND HIGH SCHOOL

CAFETERIA REHABILITATION AND MODERNIZATION
2900 ROYAL SCOTS WAY
FOR
KERN HIGH SCHOOL DISTRICT
BAKERSFIELD, KERN COUNTY, CALIFORNIA

PROJECT DATA

LEGEND

SYMBOLS

- GRID LINES
- GATE SYMBOL
- DOOR SYMBOL / DOOR NUMBER
- WINDOW SYMBOL / WINDOW NUMBER / T = TEMPERED WH/OCCURS
- REVISION NUMBER
- WORK POINT / CONTROL PT./DATUM PT. / ELEVATION
- MATCH LINE (SHADED PORTION IS THE SIDE SHOWN)
- NORTH ARROW (PLAN NORTH / TRUE NORTH)
- BUILDING SECTION / SHEET NUMBER
- WALL SECTION / SHEET NUMBER
- DETAIL NUMBER / SHEET NUMBER
- ROOM NUMBER / NAME / SHEET REFERENCE OF ROOM (101 OFFICE / A9.0)
- REVISED FINISH GRADE / EXISTING GRADE CALLED (E)
- KEYNOTE
- SIGNS SEE SCHEDULE A5.0
- KITCHEN EQUIPMENT
- ADA CLEARANCE SEE SCHEDULE

ABBREVIATIONS

GENERAL NOTES

NOTHING IN THE DRAWINGS AND/OR THE SPECIFICATIONS SHALL BE CONSTRUED TO PERMIT AN INSTALLATION THAT COULD BE IN VIOLATION OF THE APPLICABLE CODES, ORDINANCES, REGULATIONS, RESTRICTIONS, ETC. ALL WORK PERFORMED UNDER THIS CONTRACT SHALL BE IN FULL ACCORDANCE WITH ALL APPLICABLE CODES, ORDINANCES, REGULATIONS.

THE CONTRACTOR SHALL VERIFY ALL DIMENSIONS IN THE FIELD AND SHALL NOTIFY THE ARCHITECT OF ANY DISCREPANCIES IMMEDIATELY. DISCREPANCIES BETWEEN FIELD CONDITIONS AND THE DRAWINGS SHALL CAUSE THE CONTRACTOR TO NOTIFY THE ARCHITECT PRIOR TO MAKING ANY CHANGES IN THE WORK.

THE DRAWINGS, IDEAS, DESIGNS AND ARRANGEMENTS REPRESENTED HEREBY ARE AND SHALL REMAIN THE PROPERTY OF THE ARCHITECT/OWNER AND NO PART THEREOF SHALL BE COPIED OR DISCLOSED TO OTHERS OR USED IN CONNECTION WITH ANY WORK OR PROJECT OTHER THAN THE SPECIFIC PROJECT FOR WHICH THESE DOCUMENTS HAVE BEEN PREPARED AND DEVELOPED WITHOUT THE WRITTEN CONSENT OF THE ARCHITECT. VISUAL CONTACT WITH THESE DRAWINGS CONSTITUTES CONCLUSIVE EVIDENCE OF ACCEPTANCE OF THESE RESTRICTIONS.

WRITTEN DIMENSIONS ON THESE DRAWINGS SHALL HAVE PRECEDENCE OVER SCALED DIMENSIONS. CONTRACTOR SHALL VERIFY AND BE RESPONSIBLE FOR ALL DIMENSIONS AND CONDITIONS ON THE JOB AND THE ARCHITECT MUST BE NOTIFIED OF ANY VARIATIONS FROM THE DIMENSIONS AND CONDITIONS SHOWN BY THESE DRAWINGS.

MISPLACEMENT, ADDITION, OR OMISSION OF ANY WORD, LETTER, FIGURE, PUNCTUATION MARK, ETC., SHALL IN NO WAY CHANGE OR ALTER THE TRUE INTENT, SPIRIT, OR MEANING OF THE DRAWINGS. THE CONTRACTOR SHALL STUDY AND COMPARE ALL DRAWINGS AND SHALL REPORT ANY ERRORS, OMISSIONS, OR INCONSISTENCIES TO THE ARCHITECT BEFORE COMMENCING WORK IN THAT AREA.

ALL WORK SHALL BE IN CONFORMANCE WITH THE CURRENTLY ADOPTED EDITION OF THE:

PART 1	2022 CALIFORNIA ADMINISTRATIVE CODE (CAC), TITLE 24 C.C.R.
PART 2	2022 CALIFORNIA BUILDING CODE (CBC), TITLE 24 C.C.R. (2021 INTERNATIONAL BUILDING CODE, VOLUME 1 & 2 AND 2022 CALIFORNIA AMENDMENTS)
PART 3	2022 CALIFORNIA ELECTRICAL CODE (CEC), TITLE 24 C.C.R. (2020 EDITION OF NFPA 70 AND 2022 CALIFORNIA AMENDMENTS)
PART 4	2022 CALIFORNIA MECHANICAL CODE (CMC), TITLE 24 C.C.R. (2021 IAPMO UNIFORM MECHANICAL CODE AND 2022 CALIFORNIA AMENDMENTS)
PART 5	2022 CALIFORNIA PLUMBING CODE (CPC), TITLE 24 C.C.R. (2021 IAPMO UNIFORM PLUMBING CODE AND 2022 CALIFORNIA AMENDMENTS)
PART 6	2022 CALIFORNIA ENERGY CODE (CEC), TITLE 24 C.C.R.
PART 9	2022 CALIFORNIA FIRE CODE (CFC), TITLE 24 C.C.R (2021 INTERNATIONAL FIRE CODE AND 2022 CALIFORNIA AMENDMENTS)
PART 10	2022 CALIFORNIA EXISTING BUILDING CODE, TITLE 24 C.C.R. (2021 INTERNATIONAL EXISTING BUILDING CODE AND 2022 CALIFORNIA AMENDMENTS)
PART 11	2022 CALIFORNIA GREEN BUILDING STANDARDS CODE (CAL GREEN), TITLE 24 C.C.R.
PART 12	2022 CALIFORNIA REFERENCED STANDARDS CODE, TITLE 24 C.C.R.

TITLE 19 C.C.R., PUBLIC SAFETY, STATE FIRE MARSHALL REGULATIONS
2016 A.S.M.E. A17.1/CSA B44-16 SAFETY CODE FOR ELEVATORS AND ESCALATORS (PER 2022 CBC PART 2 CH. 35)
NOTE: CAL/OSHA ELEVATOR UNIT ENFORCES C.C.R. TITLE 8 AND USES THE 2004 A.S.M.E. A17.1 BY ADOPTION.

PARTIAL LIST OF APPLICABLE STANDARDS:

NFPA 13	STANDARD FOR THE INSTALLATION OF SPRINKLER SYSTEMS (CALIFORNIA AMENDED)	2022 EDITION
NFPA 14	STANDARD FOR THE INSTALLATION OF STANDPIPE AND HOSE SYSTEMS (CALIFORNIA AMENDED)	2019 EDITION
NFPA 17	STANDARD FOR DRY CHEMICAL EXTINGUISHING SYSTEMS	2021 EDITION
NFPA 17A	STANDARD FOR WET CHEMICAL EXTINGUISHING SYSTEMS	2021 EDITION
NFPA 20	STANDARD FOR THE INSTALLATION OF STATIONARY PUMPS FOR FIRE PROTECTION	2019 EDITION
NFPA 22	STANDARD FOR WATER TANKS FOR PRIVATE FIRE PROTECTION	2023 EDITION
NFPA 24	STANDARD FOR THE INSTALLATION OF PRIVATE FIRE SERVICE MAINS AND THEIR APPURTENANCES (CALIFORNIA AMENDED)	2019 EDITION
NFPA 72	NATIONAL FIRE ALARM CODE AND SIGNALING CODE (CALIFORNIA AMENDED)	2022 EDITION
NFPA 80	STANDARD FOR FIRE DOORS AND OTHER OPENING PROTECTIVES	2019 EDITION
NFPA 2001	STANDARD ON CLEAN AGENT FIRE EXTINGUISHING SYSTEMS (CALIFORNIA AMENDED)	2018 EDITION
UL300	STANDARD FOR FIRE TESTING OF FIRE EXTINGUISHING SYSTEMS FOR PROTECTION OF COMMERCIAL COOKING EQUIPMENT	2005 (R2010)
UL464	AUDIBLE SIGNALING DEVICES FOR FIRE ALARM AND SIGNALING SYSTEMS, INCLUDING ACCESSORIES	2003 EDITION
UL 521	STANDARD FOR HEAT DETECTORS FOR FIRE PROTECTIVE SIGNALING SYSTEMS	1999 EDITION W/REV'S THROUGH JULY, 20, 2005
UL 1971	STANDARD FOR SIGNALING DEVICES FOR THE HEARING IMPAIRED	2002 (R2012)
ICC 300	STANDARDS FOR BLEACHERS, FOLDING AND TELESCOPIC SEATING, AND GRANDSTANDS	2017 EDITION

FOR A COMPLETE LIST OF APPLICABLE NFPA STANDARDS REFER TO 2022 CBC (SFM) CHAPTER 35 AND CALIFORNIA FIRE CODE (CFC) CHAPTER 80.

SEE CALIFORNIA BUILDING CODE, CHAPTER 35, FOR STATE OF CALIFORNIA AMENDMENTS TO THE NFPA STANDARDS.
*ALL PARTS OF THE 2022 CALIFORNIA BUILDING CODE BECOME EFFECTIVE JANUARY 1, 2023.

IF CONFLICTS BETWEEN VARIOUS ELEMENTS (ARCHITECTURAL, STRUCTURAL, MECHANICAL, PLUMBING, ELECTRICAL) OF THE WORK OF THE DRAWINGS ARE DISCOVERED, THEY SHALL BE BROUGHT TO THE ATTENTION OF THE ARCHITECT IN ACCORDANCE WITH THE CONDITIONS OF THE CONTRACT.

THESE PROPOSED PLANS WERE BASED ON PLANS BY OTHERS, FURNISHED BY THE OWNER, INDICATING WORK OF PREVIOUS CONTRACTS. THE EXISTING PLANS WILL BE MADE AVAILABLE FOR THE CONTRACTOR'S REVIEW UPON REQUEST. THE OWNER, THE ARCHITECT AND THE ENGINEERS SHALL ASSUME NO RESPONSIBILITY FOR THE EXISTING CONDITIONS AND MEASUREMENTS INDICATED ON THESE PROPOSED PLANS. THE CONTRACTOR SHALL FIELD VERIFY ALL EXISTING MEASUREMENTS AND CONDITIONS NECESSARY TO PROVIDE COMPLETE WORK AS INDICATED BY THE INTENT OF THESE PLANS PRIOR TO PROCEEDING WITH WORK OF THIS CONTRACT.

EXISTING DIMENSIONS INDICATED ON THESE PROPOSED DRAWINGS HAVE BEEN PROVIDED FROM INFORMATION OBTAINED FROM THE DISTRICT. THE CONTRACTOR SHALL USE WHAT MEANS NECESSARY TO VERIFY THE DIMENSIONS IN THE AREAS OF DESIGNATED WORK. THE CONTRACTOR SHALL REPORT ANY DISCREPANCIES TO THE ARCHITECT PRIOR TO STARTING WORK IN THE AREA OF QUESTION.

CHANGES TO THE APPROVED DRAWINGS AND SPECIFICATIONS SHALL BE MADE BY AN ADDENDA, A CONSTRUCTION CHANGE DOCUMENT (CCD TYPE A) APPROVED BY THE DIVISION OF THE STATE ARCHITECT, AS REQUIRED BY SECTION 4-338, PART 1, TITLE 24, CCR.

ALL SUBSTITUTIONS OF PRODUCTS OR DESIGNS WHICH AFFECT THE STRUCTURAL SAFETY, FIRE AND LIFE-SAFETY, OR ACCESSIBILITY OF THE WORK MUST BE SUBMITTED TO DSA AS A CCD FOR REVIEW AND APPROVAL.

A "CLASS 2" PROJECT INSPECTOR EMPLOYED BY THE DISTRICT (OWNER) AND APPROVED BY THE DIVISION OF THE STATE ARCHITECT SHALL PROVIDE CONTINUOUS INSPECTION OF THE WORK. THE DUTIES OF THE INSPECTOR ARE DEFINED IN SECTION 4-342, PART 1, TITLE 24, CCR.

GRADING PLANS, DRAINAGE IMPROVEMENTS, ROAD AND ACCESS REQUIREMENTS AND ENVIRONMENTAL HEALTH CONSIDERATIONS SHALL COMPLY WITH ALL LEGAL ORDINANCES.

THE INTENT OF THESE DRAWINGS AND SPECIFICATIONS IS THAT THE WORK OF THE ALTERATIONS, REHABILITATION OR RECONSTRUCTION IS TO BE IN ACCORDANCE WITH TITLE 24, CALIFORNIA CODE OF REGULATIONS. SHOULD ANY EXISTING CONDITION SUCH AS DETERIORATION OR NON-COMPLYING CONSTRUCTION BE DISCOVERED WHICH IS NOT COVERED BY THE CONTRACT DOCUMENTS WHERE THE FINISHED WORK WILL NOT COMPLY WITH TITLE 24, CALIFORNIA CODE OF REGULATIONS, A CONSTRUCTION CHANGE DOCUMENT (CCD TYPE A) OR A SEPARATE SET OF PLANS AND SPECIFICATIONS, DETAILING AND SPECIFYING THE REQUIRED REPAIR WORK SHALL BE SUBMITTED TO AND APPROVED BY DIVISION OF THE STATE ARCHITECT BEFORE PROCEEDING WITH THE REPAIR WORK.

CUTTING, BORING, SAWCUTTING OR DRILLING THROUGH NEW OR EXISTING STRUCTURAL ELEMENTS TO BE DONE ONLY WHEN SO DETAILED IN THE DRAWINGS OR ACCEPTED BY THE ARCHITECT AND ENGINEER WITH THE APPROVAL OF DSA REPRESENTATIVE.

A DSA ACCEPTED TESTING LABORATORY DIRECTLY EMPLOYED BY THE SCHOOL BOARD SHALL CONDUCT ALL REQUIRED TESTS AND INSPECTIONS FOR THE PROJECT.
DRINKING WATER WELL SHALL COMPLY WITH ALL LOCAL HEALTH DEPARTMENT REQUIREMENTS

NOTIFY ARCHITECT AND THE DIVISION OF THE STATE ARCHITECT FIELD ENGINEER IF ANY DISCREPANCIES OCCUR.

FIRE SAFETY DURING CONSTRUCTION AND DEMOLITION SHALL BE IN COMPLIANCE WITH CFC CH 33.

SCOPE OF WORK

SUMMARY:

THE SCOPE OF WORK FOR THIS APPLICATION IS FOR THE GENERAL ALTERATIONS TO HIGHLAND HIGH SCHOOL CAFETERIA UNIT #1000, INCLUDING RETROFIT ITEMS IDENTIFIED IN EDCR A#03-122973 -- ROOF DIAPHRAGM REPLACEMENT, WALL OUT-OF-PLANE ANCHORAGE UPGRADE, FOUNDATION STRENGTHENING, FOR ORIGINAL A#31597 AND WILL INCLUDE MODERNIZATION OF KITCHEN, DINING, WALK-IN COOLER AND FREEZER, DRY STORAGE, OFFICE, FACULTY LOUNGE, RESTROOMS, ELECTRICAL, JANITORIAL AND STORAGE.

BASE BID:

THE SCOPE OF WORK INTENDED AS BASE BID SHALL INCLUDE BUT NOT LIMITED TO, INTERIOR DEMOLITION OF ROOFING, ROOF DECK, NON-BEARING WALLS, ELECTRICAL, FIRE ALARM, LIGHTING, PLUMBING, HVAC, KITCHEN EQUIPMENT, CEILINGS, FINISHES ETC AS REQUIRED FOR AND ALL IMPROVEMENTS TO THE EXISTING BUILDING INCLUDING BUT NOT LIMITED TO ALL UTILITIES, FOUNDATIONS, CONCRETE SITE WORK, ROOF DECK, ROOFING, FIREPROOFING, STRUCTURAL STEEL, NON-BEARING WALLS, ELECTRICAL, FIRE ALARM, PLUMBING, HVAC, KITCHEN EQUIPMENT, COLD BOX, FREEZER, ROOFING, CEILINGS, LIGHTING, INTERIOR FINISHES, DOORS AND HARDWARE ETC AS REQUIRED TO ENSURE A COMPLETE & FUNCTIONAL PROJECT READY FOR OCCUPANCY.

CA ENERGY CODE

THE CALIFORNIA ENERGY CODE SECTION 10-103 REQUIRES ACCEPTANCE TESTING ON ALL NEWLY INSTALLED LIGHTING CONTROLS, MECHANICAL SYSTEMS, ENVELOPES, AND PROCESS EQUIPMENT AFTER INSTALLATION AND BEFORE PROJECT COMPLETION. AN ACCEPTANCE TEST IS A FUNCTIONAL PERFORMANCE TEST TO HELP ENSURE THAT NEWLY INSTALLED EQUIPMENT IS OPERATING AND IN COMPLIANCE WITH THE ENERGY CODE.

LIGHTING CONTROLS ACCEPTANCE TESTS MUST BE PERFORMED BY A CERTIFIED LIGHTING CONTROLS ACCEPTANCE TEST TECHNICIAN (ATT).

MECHANICAL SYSTEM ACCEPTANCE TESTS MUST BE PERFORMED BY A CERTIFIED MECHANICAL ATT FOR PROJECTS SUBMITTED ON OR AFTER OCTOBER 1, 2021.

ENVELOPE AND PROCESS EQUIPMENT ACCEPTANCE TESTS SHALL BE PERFORMED BY THE INSTALLING CONTRACTOR, ENGINEER/ARCHITECT OF RECORD OR THE OWNER'S AGENT.

A LISTING OF CERTIFIED ATT CAN BE FOUND AT:
HTTPS://WWW.ENERGY.CA.GOV/PROGRAMS-AND-TOPICS/PROGRAMS/ACCEPTANCE-TEST-TECHNICIAN-CERTIFICATION-PROVIDER-PROGRAM/ACCEPTANCE.

THE ACCEPTANCE TESTING PROCEDURES MUST BE REPEATED, AND DEFICIENCIES MUST BE CORRECTED BY THE BUILDER OR INSTALLING CONTRACTOR UNTIL THE CONSTRUCTION/INSTALLATION OF THE SPECIFIED SYSTEMS CONFORM AND PASS THE REQUIRED ACCEPTANCE CRITERIA.

PROJECT INSPECTORS WILL COLLECT THE FORMS TO CONFIRM THAT THE REQUIRED ACCEPTANCE TESTS HAVE BEEN COMPLETED.

SITE DATA

SEISMIC DESIGN LOADS:

SEISMIC IMPORTANCE FACTOR I_E	1.25
RISK CATEGORY	III
S_S	0.918
S_1	0.329
SEISMIC SITE CLASS	D
S_{DS}	0.734
S_{D1}	N/A
SEISMIC DESIGN CATEGORY	D
ULTIMATE DESIGN WIND SPEED	101
WIND EXPOSURE	C
TOPOGRAPHIC FACTOR	1.0
CLIMATE ZONE	13
FLOOD HAZARD	DESIGNATION: ZONE X, (FIRM) PANEL 1845, SEPTEMBER 26, 2008

SHEET INDEX

(99) SHEETS TOTAL

TITLE
- T0.0 TITLE SHEET, SHEET INDEX & VICINITY MAP

CIVIL
- C1 SITE PLAN
- C2 GRADING PLAN, GRADING NOTES
- C3 EROSION CONTROL PLAN
- C4 BMP DETAILS

ARCHITECTURAL
- A1.0 OVERALL SITE PLAN
- A1.1 PARTIAL SITE PLAN, PARTIAL DEMO SITE PLAN & SITE ELEVATIONS
- A2.0 PARTIAL DEMO FLOOR PLAN - UNIT 1000
- A2.1 PARTIAL DEMO FLOOR PLAN - UNIT 1000
- A2.2 FLOOR PLAN - UNIT 1000
- A3.0 PARTIAL FLOOR PLAN - UNIT 1000
- A3.1 PARTIAL CEILING JOIST PLAN
- A4.0 REFLECTED CEILING PLAN - UNIT 1000
- A5.0 DOOR SCHEDULE, ROOM FINISH SCHEDULE & DETAILS
- A6.0 DEMO ROOF PLAN - UNIT 1000
- A6.1 ROOF PLAN - UNIT 1000
- A7.0 EXTERIOR ELEVATIONS & ROOF WELL ELEVATIONS
- A8.0 BUILDING SECTIONS
- A9.0 INTERIOR ELEVATIONS
- A9.1 INTERIOR ELEVATIONS
- A9.2 INTERIOR ELEVATIONS
- A9.3 INTERIOR ELEVATIONS
- A10.0 DETAILS
- A10.1 DETAILS
- A10.2 DETAILS
- A10.3 DETAILS
- A10.4 DETAILS
- A10.5 DETAILS

STRUCTURAL
- S0.1 GENERAL NOTES
- S0.2 GENERAL NOTES
- S1.1 TYPICAL DETAILS
- S1.2 TYPICAL DETAILS
- S1.3 TYPICAL DETAILS
- S2.1 FOUNDATION PLAN
- S2.2 ROOF FRAMING PLAN
- S2.3 PARTIAL LOW ROOF FRAMING PLAN
- S3.1 MISC PLANS AND DETAILS
- S4.1 SECTIONS AND DETAILS
- S4.2 SECTIONS AND DETAILS

PLUMBING
- P1.0 PLUMBING SITE PLAN, NOTES, & SCHEDULES
- P1.1 PLUMBING SITE PLAN, NOTES, & SCHEDULES
- P2.0 PLUMBING DEMO PLAN
- P3.0 PLUMBING PLAN (WASTE, & VENT)
- P3.1 PLUMBING PLAN (WATER)
- P3.2 PLUMBING PLAN (GAS & CONDENSATE)

FIRE SPRINKLER
- FP0.0 FIRE SPRINKLER COVER SHEET, INDEX & LEGENDS
- FP0.1 FIRE SPRINKLER NOTES
- FP2.0 FIRE SPRINKLER PIPING PLAN, CROSS SECTION & DETAILS

MECHANICAL
- M1.0 MECHANICAL NOTES & SCHEDULES
- M1.1 MECHANICAL DETAILS
- M1.2 MECHANICAL DETAILS
- M1.3 MECHANICAL DETAILS
- M2.0 MECHANICAL DEMOLITION PLAN BLD. 1000
- M2.1 MECHANICAL DEMOLITION PLAN BLD. 1100
- M3.0 MECHANICAL PLAN SOUTH BUILDING 1000
- M3.1 MECHANICAL PLAN NORTH BUILDING 1000
- M3.2 MECHANICAL PLAN BUILDING 1100
- M4.0 MECHANICAL ROOF PLAN AND SECTION
- M4.1 MECHANICAL ROOF PLAN AND SECTION
- M5.0 KITCHEN EX. HOOD SCHEDULE
- M5.1 KITCHEN HOOD DETAILS
- M5.2 KITCHEN EX. FAN AND WIRING
- M5.3 KITCHEN MAKE-UP-AIR UNIT
- M5.4 KITCHEN FIRE SUPPRESSION SYSTEM
- M5.5 KITCHEN SYSTEMS WIRING AND CONTROLS
- M5.6 KITCHEN SYSTEMS HMI CONTROLS
- M6.0 TITLE-24

ELECTRICAL
- E1.00 ELECTRICAL SITE PLAN, SYMBOL LEGEND AND NOTES
- E1.10 ELECTRICAL SINGLE LINE DIAGRAM AND FEEDER SCHEDULE
- E1.20 SCHEDULES, CALCULATIONS AND DETAILS
- E2.10 DEMOLITION PLAN, LIGHTING PLAN, DETAILS AND NOTES
- E2.20 POWER & MECH POWER FLOOR PLANS, DETAILS AND NOTES
- E3.00 FIRE ALARM SITE PLAN AND SYMBOL LEGEND
- E3.10 FIRE ALARM FLOOR PLAN AND NOTES
- E3.20 FIRE ALARM SINGLE LINE DIAGRAM, CALC'S, SCHEDULES AND NOTES
- E4.00 NRCC
- E5.00 TITLE 24 INDOOR
- E5.01 TITLE 24 OUTDOOR

RICCA DESIGN STUDIOS
- QF000-1 INDEX SHEET
- QF100-1 FOODSERVICE KEY PLAN
- QF400-1A FOODSERVICE EQUIPMENT PLAN
- QF400-1B FOODSERVICE EQUIPMENT SCHEDULE
- QF400-1C FOODSERVICE 3D VIEWS
- QF400-2A FOODSERVICE UTILITY SCHEDULE
- QF400-2B FOODSERVICE UTILITY SCHEDULE
- QF400-3 FOODSERVICE BUILDING CONDITIONS & VENTILATION PLAN
- QF400-4 FOODSERVICE PLUMBING PLAN
- QF400-5 FOODSERVICE ELECTRICAL PLAN
- QF500-1 FOODSERVICE ELEVATIONS
- QF500-2 FOODSERVICE ELEVATIONS
- QF500-3 FOODSERVICE ELEVATIONS
- QF501-1 FOODSERVICE DETAILS & SECTIONS
- QF501-2 FOODSERVICE DETAILS & SECTIONS
- QF501-3 FOODSERVICE DETAILS & SECTIONS
- QF501-4 FOODSERVICE DETAILS & SECTIONS
- QF501-5 FOODSERVICE DETAILS & SECTIONS
- QF700-1 FOODSERVICE REFRIGERATION SYSTEM DETAILS
- QF701-1 FOODSERVICE WALK-IN REFRIGERATOR DETAILS
- QF701-2 FOODSERVICE WALK-IN FREEZER DETAILS

HAZARDOUS MAT'L REMOVAL NOTES

1. THE GENERAL CONTRACTOR SHALL IMMEDIATELY NOTIFY BOTH THE OWNER AND THE ARCHITECT IF ASBESTOS OR OTHER HAZARDOUS CONTAINING MATERIALS ARE UNCOVERED IN ANY LOCATION OTHER THAN INDICATED IN THESE PLANS OR SPECIFICATIONS WHERE WORK OF THIS CONTRACT IS SCHEDULED.
2. COST OF HAZARDOUS MATERIAL REMOVAL/ASBESTOS ABATEMENT SHALL BE BORE BY THE GENERAL CONTRACTOR, AS PART OF THIS CONTRACT. ASBESTOS AND HAZARDOUS MATERIAL TESTING WORK AND SERVICES BY THE CERTIFIED ASBESTOS CONSULTANT ARE NOT A PART OF THIS CONTRACT. THE OWNER WILL EMPLOY THE CERTIFIED ASBESTOS ABATEMENT CONSULTANT AND PAY ALL COST OF TESTING.
3. THE COST OF AND SUBSEQUENT REMOVAL OF OTHER BUILDING MATERIALS CONTAINING HAZARDOUS MATERIALS SHALL BE A PART OF THIS CONTRACT. CONTRACTOR SHALL BE REQUIRED TO CONTRACT THE REMOVAL OF ANY AND ALL HAZARDOUS MATERIALS PER REQUIREMENTS AND REGULATIONS PER O.S.H.A., A.H.E.R.A. AND N.E.S.H.A.P. AND ANY OR ALL OTHER APPLICABLE FEDERAL AND STATE REGULATIONS.
4. IT SHALL BE CLEARLY UNDERSTOOD BY THE CONTRACTOR AND THE OWNER THAT THE ARCHITECT IS NOT RESPONSIBLE IN ANY WAY WHATSOEVER FOR THE DETECTION OF THE PRESENCE OF ANY HAZARDOUS MATERIALS OR THE ABATEMENT OR REMOVAL THERE OF.
5. AFTER THE CERTIFIED ASBESTOS CONSULTANT HAS CERTIFIED THE ENVIRONMENT IS FREE OF ASBESTOS FIBERS (AIR SAMPLES AND THE LABORATORY TESTS), THE GENERAL CONTRACTOR SHALL COMPLETE THE WORK OF THIS CONTRACT.
6. IT IS THE GENERAL CONTRACTOR'S RESPONSIBILITY TO KEEP THE OWNER AND THE ARCHITECT INFORMED AS OF WHEN THE ASBESTOS ABATEMENT AND HAZARDOUS MATERIALS CONTRACTOR WILL BE REQUIRED TO COMMENCE THEIR WORK.
7. IT SHALL BE UNDERSTOOD THAT THE OWNER, THE ARCHITECT AND THE ENGINEER MAKE NO IMPLIED OR EXPRESSED WARRANTY OR GUARANTEE THAT THE LIST OF PRODUCTS/ FINISHES CONTAINING HAZARDOUS BUILDING MATERIALS IS COMPREHENSIVE.
8. SEE SPECIFICATION SECTION 02 62 00 HAZARDOUS MATERIALS ABATEMENT AND REMOVAL FOR A LIST OF IDENTIFIED MATERIALS REQUIRING ABATEMENT.

DESIGN TEAM

OWNER
KERN HIGH SCHOOL DISTRICT
5801 SUNDALE AVE.
BAKERSFIELD, CA. 93309
(661) 827-3154
FAX (661) 827-3301

ARCHITECT
SCARCHITECT INC.
1601 NEW STINE ROAD, SUITE 280
BAKERSFIELD, CA. 93309
(661) 397-4377
FAX (661) 397-4378

CONSULTING ENGINEERS

CIVIL
SWANSON ENGINEERING
2000 OAK ST., SUITE 150
BAKERSFIELD, CA 93301
(661) 831-4919
FAX (661) 831-4929

STRUCTURAL
JOHN A. MARTIN & ASSOCIATES
950 SOUTH GRAND AVE.
LOS ANGELES, CA. 90015
(213) 483-6490
FAX (213) 744-1515

MECHANICAL/ PLUMBING
BASKIN MECHANICAL ENGINEERS INC.
5500 MING AVE., SUITE 251
BAKERSFIELD, CA. 93309
(661) 397-2114
FAX (661) 397-2116

ELECTRICAL
DPG ENGINEERING, INC.
6702 N. CEDAR AVE., SUITE 205
FRESNO, CA. 93710
(559) 276-5144
FAX (559) 900-4929

FOOD SERVICE
RICCA DESIGN STUDIOS
13772 BEWLEY ST.
GARDEN GROVE, CA. 92843
(562) 665-2076

VICINITY MAP

TRUE NORTH
SCALE : NTS

IDENTIFICATION STAMP
DIV. OF THE STATE ARCHITECT
APP: 03-122528 INC:
REVIEWED FOR
SS ☑ FLS ☑ ACS ☑
DATE: 01/06/2025

PTN : 63529-385 FILE: 15-H3

HIGHLAND HIGH SCHOOL
CAFETERIA REHABILITATION AND MODERNIZATION
2900 ROYAL SCOTS WAY
FOR
KERN HIGH SCHOOL DISTRICT
BAKERSFIELD, KERN COUNTY, CALIFORNIA

SC ARCHITECT Inc.
1601 NEW STINE ROAD, SUITE 280
BAKERSFIELD, CA 93309
PH: (661) 397-4377
FAX: (661) 397-4378
WWW.SCARCHITECT.COM

STEPHEN J. CORBIN, NCARB, AIA, LEED AP

CHECK AND VERIFY ALL DIMENSIONS BEFORE PROCEEDING WITH THE WORK. REPORT DISCREPANCIES TO THE ARCHITECT. ALL CONSTRUCTION SHALL CONFORM TO THE C.B.C.

TITLE SHEET, SHEET INDEX & VICINITY MAP

MARK	DATE	REVISIONS
1		
2		
3		

JOB NO. 1319
DRAWN: ED, FJS
CHECKED: BCW
DATE: 9/25/24

0.0
1 OF 99 SHEETS

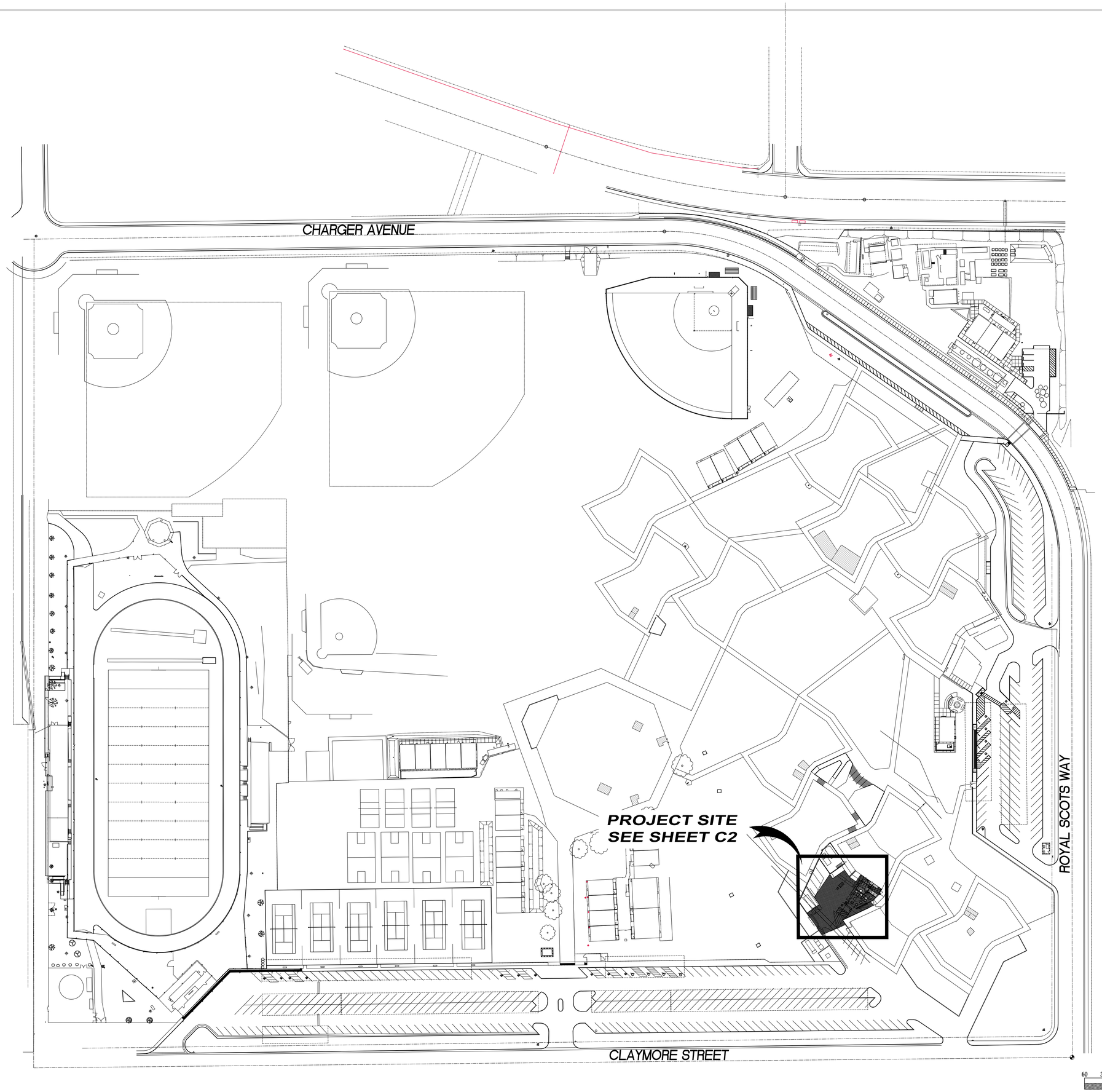

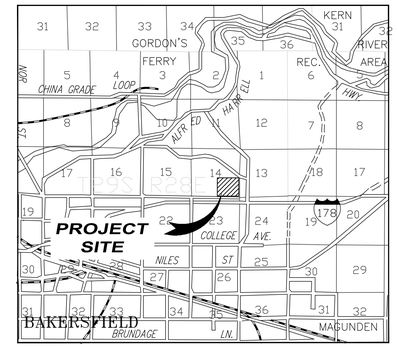

VICINTIY MAP
N.T.S.

LEGEND:

ABBREVIATIONS:

(E)	EXISTING
TYP.	TYPICAL
FD.	FOUND
BK.	BOOK
PG.	PAGE
C.O.K.	COUNTY OF KERN
C.O.B.	CITY OF BAKERSFIELD
CONC.	CONCRETE
A.C.	ASPHALT PAVEMENT
FG	FINISH GRADE
EP	EDGE OF PAVEMENT
TC	TOP OF CURB
FL	FLOWLINE
FF	FINISHED FLOOR
FP	FINISHED PAD
TP	TOP OF PAVEMENT
GB	GRADE BREAK
FS	FINISH SLAB

EXISTING FIRE HYDRANT
EXISTING POWER POLE
EXISTING STREET LIGHT
FOUND MONUMENT
EXISTING TRAFFIC SIGN
33.20 DESIGN CONTOUR
EXISTING STORM DRAIN LINE
EXISTING FIBER OPTIC LINE
EXISTING WATER LINE
EXISTING SEWER LINE
EXISTING GAS LINE
EXISTING FENCELINE
EXISTING ELECTRIC LINE
EXISTING OVERHEAD ELECTRIC LINE
EXISTING PROPERTY LINE
EXISTING RIGHT-OF-WAY
EXISTING CURB & GUTTER

BENCHMARK

TOP OF CAP ON CITY OF BAKERSFIELD CONCRETE MONUMENT IN LAMPHOLE AT THE CENTERLINE INTERSECTION OF AUBURN STREET AND PIPER WAY FOR CITY OF BAKERSFIELD BENCH MARK BOOK.

ELEVATION = 804.26'

BASIS OF BEARINGS

THE BEARING OF N89°17'26"E SHOWN FOR THE SOUTH LINE OF THE SOUTHEAST QUARTER OF SECTION 14, T.29S., R.28E., M.D.B.M. ON RECORD OF SURVEY, R.S. BOOK 9, PAGE 91, WAS USED AS THE BASIS OF BEARINGS HEREON.

LEGAL DESCRIPTION

BEING A PORTION OF THE SOUTHEAST QUARTER OF SECTION 14, T.29S., R.28E., M.D.B.M.

ADDRESS

2900 ROYAL SCOTS WAY

APN

146-020-23

UTILITY NOTE

NOT ALL UTILITIES WERE LOCATED BY THIS SURVEY AND SWANSON ENGINEERING, INC. ASSUMES NO RESPONSIBILITY FOR UNDERGROUND UTILITIES OR FACILITIES NOT SHOWN OR FOR INFORMATION OBTAINED FROM OUTSIDE SOURCES.

MISC. UTILITY NOTE

CONTRACTOR TO CALL FOR USA LOCATE AND POTHOLE ALL MARKED UTILITIES AND UTILITIES SHOWN ON THE PLANS IN CUT AREAS. VERTICAL AND HORIZONTAL LOCATION SHALL BE ASCERTAINED BY THE CONTRACTOR AHEAD OF ANY EXCAVATIONS TO VERIFY THAT THE PROPOSED DESIGN DOES NOT CONFLICT WITH ANY UTILITIES. IN THE EVENT A CONFLICT EXISTS THE ENGINEER SHALL BE NOTIFIED IN ORDER TO REDESIGN THE AFFECTED AREA. IF RELOCATION OF EXISTING UTILITIES IS DEEMED NECESSARY, THE CONTRACTOR SHALL BE COMPENSATED FOR INSTRUCTED RELOCATION. IN THE EVENT A UTILITY IS DAMAGED, THE CONTRACTOR SHALL BE WHOLLY RESPONSIBLE FOR ITS REPAIR.

SHEET INDEX

C1	SITE PLAN
C2	GRADING PLAN/GRADING NOTES
C3	EROSION CONTROL PLAN
C4	BMP DETAILS

N

SCALE: 1" = 60'
60 30 0 60 120

REGISTERED PROFESSIONAL ENGINEER
JEFFREY T. SWANSON
No. 43032
EXP. 3-31-26
STATE OF CALIFORNIA

SWANSON ENGINEERING, INC.
© 2001
2000 OAK STREET SUITE 150 ~ BAKERSFIELD, CA 93301
p:(661) 831-4919; f:(661) 873-4777

JOB# 22-045 RTS

IDENTIFICATION STAMP
DIV. OF THE STATE ARCHITECT
APP: 03-122528 INC:
REVIEWED FOR
SS ☑ FLS ☑ ACS ☑
DATE: 01/06/2025

PTN : 63529-385 FILE: 15-H3

HIGHLAND HIGH SCHOOL
CAFETERIA MODERNIZATION
2900 ROYAL SCOTS WAY
FOR
KERN HIGH SCHOOL DISTRICT
BAKERSFIELD, KERN COUNTY, CALIFORNIA

ARCHITECT SCA inc.
1601 NEW STINE ROAD, SUITE 280
BAKERSFIELD, CA 93309
PH: (661) 397-4377
FAX: (661) 397-4378
WWW.SCARCHITECT.COM
LICENSED ARCHITECT STEPHEN J. CORBIN C-16788 EXP. 12/31/25 STATE OF CALIFORNIA
STEPHEN J. CORBIN, NCARB, AIA, LEED ®-AP

CHECK AND VERIFY ALL DIMENSIONS BEFORE PROCEEDING WITH THE WORK. REPORT DISCREPANCIES TO THE ARCHITECT. ALL CONSTRUCTION SHALL CONFORM TO THE C.B.C.

KERN HIGH SCHOOL DISTRICT
Tradition of Excellence
Est. 1893

SITE PLAN

MARK	DATE	REVISIONS
1		
2		
3		

JOB NO.
DRAWN :
CHECKED :
DATE : 9-8-24

C

1
OF SHEETS

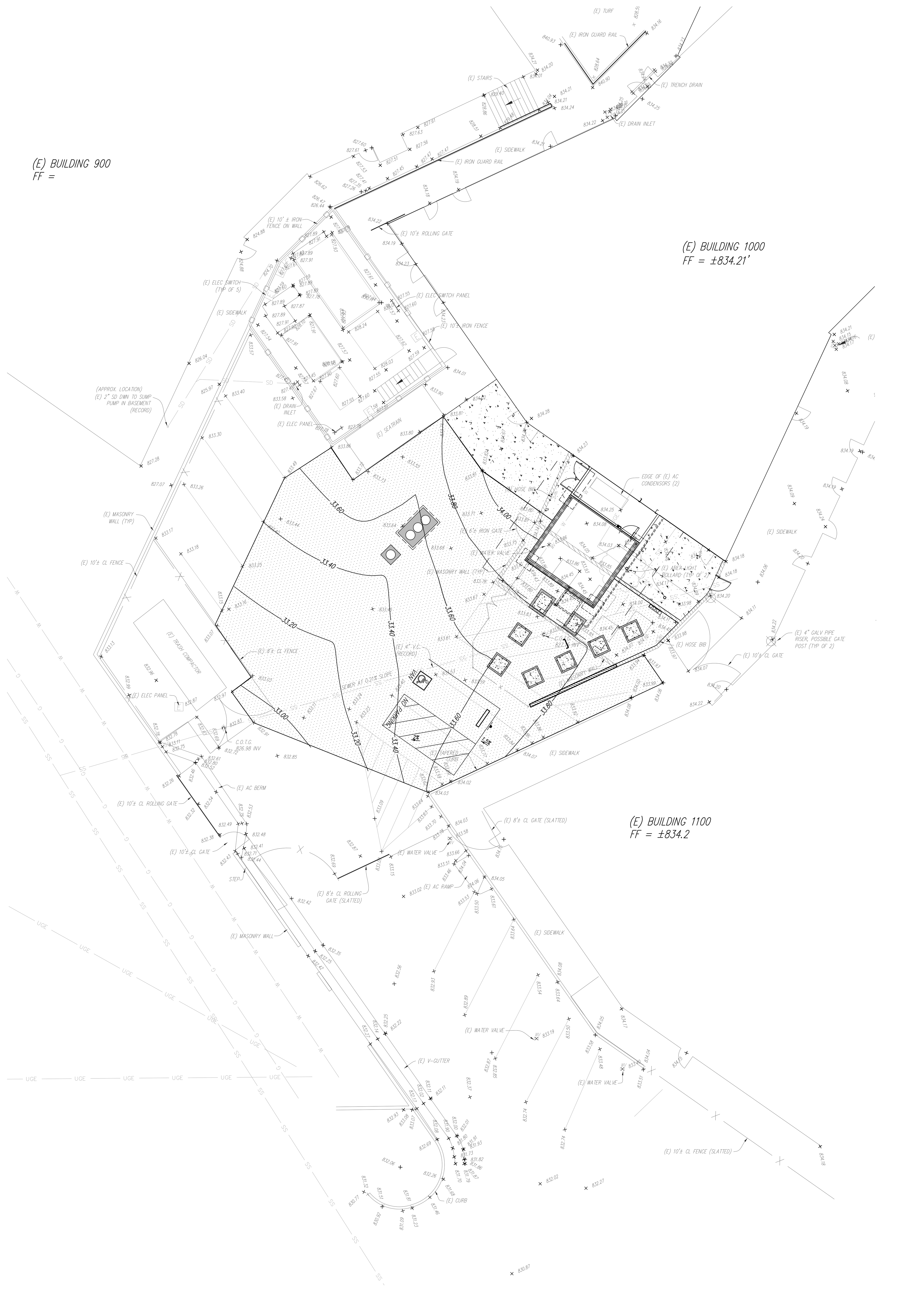

GRADING NOTES

1. ALL GRADING SHALL CONFORM TO THE CITY OF BAKERSFIELD ORDINANCES AND STANDARDS PERTAINING THERETO (CALIFORNIA BUILDING CODE, 2022) AND SHALL BE SUPERVISED AS ENGINEERED GRADING IN ACCORDANCE WITH CITY OF BAKERSFIELD ORDINANCES.

2. THE DESIGN ENGINEER SHALL EXERCISE SUFFICIENT SUPERVISORY CONTROL DURING GRADING AND CONSTRUCTION TO INSURE COMPLIANCE WITH THE PLANS, SPECIFICATIONS AND CODE WITHIN HIS PURVIEW.

3. THE SOIL ENGINEER, DESIGN ENGINEER, AND BUILDING OFFICIAL SHALL BE NOTIFIED 48 HOURS PRIOR TO PLACING ANY MATERIAL.

4. CONTRACTOR AGREES THAT HE SHALL ASSUME SOLE AND COMPLETE RESPONSIBILITY FOR JOB SITE CONDITIONS DURING THE COURSE OF CONSTRUCTION OF THIS PROJECT INCLUDING SAFETY OF ALL PERSONS AND PROPERTY; THAT THIS REQUIREMENT SHALL APPLY CONTINUOUSLY AND NOT BE LIMITED TO NORMAL WORKING HOURS; AND THAT THE CONTRACTOR SHALL DEFEND, INDEMNIFY, AND HOLD THE OWNER, ARCHITECT, AND THE ENGINEER HARMLESS FROM ANY LIABILITY, REAL OR ALLEGED, IN CONNECTION WITH THE PERFORMANCE OF WORK ON THIS PROJECT, EXCEPTING FOR LIABILITY ARISING FROM THE SOLE NEGLIGENCE OF THE OWNER, ARCHITECT, OR THE ENGINEER.

5. THE GRADING CONTRACTOR SHALL CONTACT ALL COMPANIES WITH UNDERGROUND FACILITIES PRIOR TO BEGINNING CONSTRUCTION AND VERIFY THE LOCATION AND DEPTH OF ALL UNDERGROUND FACILITIES, INCLUDING TELEPHONE, ELECTRIC, WATER, SEWER, OIL AND GAS LINES. THE ENGINEER ASSUMES NO RESPONSIBILITY FOR BURIED LINES NOT INDICATED ON THE PLAN OR FOR INFORMATION OBTAINED FROM OUTSIDE SOURCES. (USA – 811)

6. THE GRADING CONTRACTOR SHALL BE RESPONSIBLE FOR GRADING ALL AREAS TO + OR – 0.10 FOOT. IF AN AREA SHOULD BE FOUND TO BE MORE THAN 0.10 FOOT OUT OF TOLERANCE AFTER COMPACTING AND COMPLETION OF GRADING, THE CONTRACTOR SHALL RETURN AND CORRECT THE GRADING AT NO COST TO THE OWNER. GRADING TOLERANCE FOR BUILDING SLABS SHALL BE + 0.00 FOOT TO –0.05 FOOT.

7. THE CONTRACTOR SHALL WATER AS REQUIRED DURING THE GRADING OPERATIONS TO PREVENT THE OCCURRENCE OF A DUST NUISANCE AND SHALL PROTECT CURBS AND OTHER OBJECTS WHICH ARE TO REMAIN. DUST CONTROL SHALL CONFORM TO THE SAN JOAQUIN VALLEY UNIFIED AIR POLLUTION CONTROL DISTRICT REGULATIONS.

8. EXCAVATION – EXCAVATION SHALL CONSIST OF ALL EXCAVATION INVOLVED IN GRADING THE PROJECT AS SHOWN ON THE PLANS. THIS SHALL INCLUDE EXPORTING MATERIAL TO AN OFF–SITE LOCATION, AS REQUIRED.

9. EMBANKMENTS – EMBANKMENT CONSTRUCTION SHALL CONSIST OF CONSTRUCTING EMBANKMENTS, INCLUDING THE PREPARATION OF AREAS WHERE THEY ARE TO BE PLACED, THE CONSTRUCTION OF DIKES WITHIN OR OUTSIDE THE CONSTRUCTION AREA, THE PLACING AND COMPACTING OF APPROVED MATERIAL WITHIN THE CONSTRUCTION AREA WHERE UNSUITABLE MATERIAL HAS BEEN REMOVED, AND THE PLACING AND COMPACTING OF EMBANKMENT MATERIAL IN HOLES, PITS, AND DEPRESSIONS. IT SHOULD ALSO CONSIST OF PREPARING SUB–GRADE AT THE GRADING PLANE, CONFORMING TO THE GRADE TOLERANCE, DOING NECESSARY PLOWING OR BENCHING, IMPORTING OR EXPORTING, PLACING AND COMPACTING MATERIAL TO THE LINE AND GRADES SHOWN ON THE PLANS. ALL EMBANKMENT CONSTRUCTION SHALL BE CONSIDERED AS INCLUDED IN THE CONTRACT PRICE.

10. THE WORK EMBRACED HEREIN SHALL BE IN ACCORDANCE WITH THE STANDARD SPECIFICATIONS OF THE STATE OF CALIFORNIA DEPARTMENT OF TRANSPORTATION DATED JULY 2018 (UNLESS OTHERWISE SPECIFIED), INSOFAR AS THE SAME MAY APPLY IN ACCORDANCE WITH THE NOTES HERON. IN CASE OF CONFLICT WITH THE STANDARD SPECIFICATIONS AND ANY NOTES HEREON, THE NOTES HEREON SHALL TAKE PRECEDENCE OVER AND BE USED IN LIEU OF SUCH CONFLICTING PORTIONS. SAID SPECIFICATIONS SHALL APPLY BUT NOT BE LIMITED TO THE FOLLOWING:

A) ALL SITEWORK CONCRETE (CURBS, GUTTERS, SIDEWALKS) SHALL BE CLASS "3" USING TYPE II/V CEMENT AS IN ACCORDANCE WITH SECTION 90 AND SHALL HAVE AT LEAST 2500 PSI COMPRESSIVE STRENGTH AT 28 DAYS, PER CALTRANS STANDARD SPECIFICATIONS (2006) UNLESS OTHERWISE SPECIFIED.

B) ASPHALTIC CONCRETE SHALL BE TYPE "B", 1/2" MAXIMUM, MEDIUM GRADED, AND INTIMATELY MIXED WITH 5–6.5% ASPHALT PER CALTRANS STANDARD SPECIFICATIONS (2006). NO R.A.P. (RECLAIMED ASPHALT PAVEMENT) SHALL BE USED. ASPHALT SHALL BE PERFORMANCE GRADE PG64–10.

11. SWANSON ENGINEERING SHALL NOT BE RESPONSIBLE OR LIABLE FOR UNAUTHORIZED CHANGES TO, OR USES OF, THESE PLANS. ALL CHANGES TO THESE PLANS MUST BE APPROVED, IN WRITING, BY SWANSON ENGINEERING.

12. ALL GRADING SHALL CONFORM TO THE RECOMMENDATIONS CONTAINED IN THE PRELIMINARY SOILS REPORT, MADE A PART HEREOF, PREPARED BY SOILS ENGINEERING, INC., FILE NUMBER 22–18631, DATED DECEMBER 2, 2022, TITLED "GEOTECHNICAL INVESTIGATION REPORT FOR THE HIGHLAND HIGH SCHOOL CAFETERIA MODERNIZATION, 2900 ROYAL SCOTS WAY, BAKERSFIELD, CA", AND ALL ADDENDA THERETO. IN CASE OF A CONFLICT BETWEEN THE PLANS, SPECIFICATIONS, AND SOILS RECOMMENDATIONS, THE MORE STRINGENT REQUIREMENTS SHALL TAKE PRECEDENCE.

13. PRIOR TO COMMENCING CONSTRUCTION, CONTRACTOR SHALL POTHOLE ALL UTILITIES THAT WILL BE AFFECTED BY THIS CONSTRUCTION TO DETERMINE IF ANY UTILITY CONFLICTS EXIST. ANY UTILITY CONFLICTS SHALL BE BROUGHT TO THE ATTENTION OF THE ENGINEER SO THAT DESIGN CHANGES CAN BE MADE PRIOR TO THE START OF CONSTRUCTION.

14. UPON COMPLETION OF GRADING AND BEFORE THE START OF CONSTRUCTION, A FINAL SOILS REPORT SHALL BE PREPARED BY THE SOIL ENGINEER.

15. THE SOIL ENGINEER SHALL REVIEW ALL EXCAVATIONS PRIOR TO BACKFILLING AND SHALL BE NOTIFIED OF ANY ITEM ENCOUNTERED DURING THE GRADING OPERATIONS THAT MIGHT AFFECT FOUNDATION STABILITY SO THAT RECOMMENDATIONS CAN BE MADE BY THE SOIL ENGINEER.

16. CUT AND FILL SLOPES NEARER THAN FIVE FEET FROM THE BUILDING FOUNDATIONS SHALL NOT BE STEEPER THAN 5:1. CUT AND FILL SLOPES SHALL NOT BE STEEPER THAN 2:1 FOR SLOPES FARTHER THAN FIVE FEET FROM FOOTING LINES.

17. ALL SLOPES GREATER THAN THREE FEET IN VERTICAL HEIGHT SHALL BE PREPARED AND MAINTAINED TO PREVENT EROSION.

18. IMPORTED FILL MATERIAL SHALL BE GENERALLY HOMOGENOUS AND SHALL NOT CONTAIN CEMENTED OR CLAYEY AND/OR SILTY LUMPS LARGER THAN ONE INCH. WHEN SUCH LUMPS ARE PRESENT, THEY SHALL NOT REPRESENT MORE THAN TEN PERCENT OF THE MATERIAL BY DRY WEIGHT. SOIL SHALL CONSIST OF ESSENTIALLY GRANULAR, SILTY SANDS WITH LOW EXPANSION POTENTIAL AND FREE OF GRASSES, WEEDS, ROCKS LARGER THAN TWO INCHES IN DIAMETER, DEBRIS, AND SOLUBLE SULFATES IN EXCESS OF 200 PARTS PER MILLION. IMPORTED FILL SHOULD CONTAIN SUFFICIENT SILT AND CLAY BINDER TO RENDER THEM STABLE IN FOOTING TRENCHES AND CAPABLE OF MAINTAINING SPECIFIED ELEVATION TOLERANCES DURING PAVING OPERATIONS. ANY EARTHEN MATERIALS PROPOSED TO BE BROUGHT ONTO SCHOOL SITES ARE SUBJECT TO TESTING TO VERIFY THEY ARE IN COMPLIANCE WITH DTSC STANDARDS. OWNER SHALL DETERMINE IF TESTING OF MATERIALS IS REQUIRED PRIOR TO ANY MATERIAL BEING BROUGHT ONTO THE SITE. TESTING OF MATERIALS MAY TAKE UP TO TWO WEEKS TO VERIFY COMPLIANCE WITH DTSC STANDARDS.

IMPORTED SOILS SHOULD ALSO MEET THE FOLLOWING CRITERIA:

A) MAXIMUM % PASSING #200 SIEVE 40
B) MAXIMUM LIQUID LIMIT 40
C) MAXIMUM PLASTICITY INDEX 14
D) MINIMUM R–VALUE FOR PAVEMENT AREAS. 50
E) MAXIMUM EXPANSION INDEX 20
F) MAXIMUM PERCENT RETAINED 3" SIEVE 0
G) MAXIMUM PERCENT RETAINED 1–1/2" SIEVE FOR BUILDING AREAS 15
H) MAXIMUM PERCENT RETAINED ¾" SIEVE FOR LANDSCAPE AREAS 5

19. CLEARING AND GRUBBING – STRIP SURFACE VEGETATION AND HIGH–VOLUME ROOT MASSES. A STRIPPING DEPTH OF ONE TO THREE INCHES IS GENERALLY ADEQUATE. STRIPPED MATERIAL SHALL NOT BE USED AS ENGINEERED FILL OR BLENDED WITH OR INCORPORATED INTO ANY MATERIALS WHICH WILL UNDERLIE ANY STRUCTURES OR OTHER IMPROVEMENTS ON THE PROJECT. REMOVAL OF TREES OR OTHER LARGE PLANTS SHALL INCLUDE ALL ROOTS LARGER THAN ¾" DIAMETER. IF NECESSARY, ROOT REMNANTS ARE TO BE REMOVED BY HAND–PICKING. REMOVE EXISTING STRUCTURES AND IMPROVEMENTS, INCLUDING WITHIN THE LIMITS OF GRADING OR AS DEPICTED.

20. AREAS TO RECEIVE FILL SHALL BE SCARIFIED SIX INCHES, OR AS RECOMMENDED IN THE SOIL REPORT, WHICHEVER IS GREATER, UNTIL THE SURFACE IS FREE FROM RUTS, HUMMOCKS OR OTHER UNEVEN FEATURES WHICH WOULD TEND TO PREVENT UNIFORM COMPACTION BY THE EQUIPMENT TO BE USED. MOISTEN AND COMPACT TO AT LEAST 90% OF THE MAXIMUM DENSITY PER ASTM D1557 UNLESS OTHERWISE SPECIFIED.

21. ENGINEERED FILL MATERIALS SHOULD BE PLACED IN LAYERS WHICH, WHEN COMPACTED, SHALL NOT EXCEED SIX INCHES IN THICKNESS, BROUGHT TO NEAR THE OPTIMUM MOISTURE CONTENT OR TO A MOISTURE CONTENT COMMENSURATE WITH EFFECTIVE COMPACTION AND SOIL STABILITY, AND COMPACTED TO A MINIMUM OF 90 PERCENT OF THE MAXIMUM DENSITY OBTAINABLE BY ASTM TEST METHOD D1557.

22. THE ENGINEER MAKES NO WARRANTY OF THE ANTICIPATED SHRINKAGE FACTOR. THE GRADING PLAN DOES NOT NECESSARILY INDICATE A BALANCED SITE. CONTRACTOR SHALL BE RESPONSIBLE FOR IMPORTING MATERIALS FROM AN OFF–SITE LOCATION OR EXPORTING EXCESS MATERIAL TO AN OFF–SITE LOCATION, AS NEEDED.

23. CONTRACTOR TO VERIFY DIMENSIONS AND ELEVATIONS OF EXISTING IMPROVEMENTS IN THE FIELD BEFORE PROCEEDING WITH WORK. ANY DISCREPANCIES THAT WILL AFFECT TIE–INS TO EXISTING IMPROVEMENTS SHALL BE BROUGHT TO THE ATTENTION OF THE ENGINEER BEFORE PROCEEDING WITH ANY WORK.

24. BUILDING PAD PREPARATION: EXCAVATE EARTH MATERIAL TO A MINIMUM DEPTH OF TWO (2) FEET BELOW THE LOWEST GRADE OR ONE (1) FOOT BELOW THE LOWEST FOUNDATION IN THE BUILDING AREA, WHICHEVER IS GREATER. THE BOTTOM OF THE EXCAVATION SHALL BE REVIEWED BY THE SOIL ENGINEER OR HIS REPRESENTATIVE PRIOR TO ANY BACKFILL OPERATIONS. THE TOP EIGHT INCHES OF MATERIALS EXPOSED AT THE BOTTOM OF THE EXCAVATION SHALL BE SCARIFIED, MOISTURE CONDITIONED AND COMPACTED TO A MINIMUM OF 90 PERCENT OF ASTM D1557. MOISTEN BACKFILL SOILS TO NEAR THE OPTIMUM MOISTURE OR TO A MOISTURE CONSISTENT WITH EFFECTIVE COMPACTION AND SOILS STABILITY. COMPACT MOISTENED SOILS TO A MINIMUM OF 90 PERCENT OF THE MAXIMUM DENSITY OBTAINED BY ASTM TEST METHOD D1557. WORK TO LINES AT LEAST FIVE (5) FEET BEYOND THE OUTSIDE EDGES OF EXTERIOR FOOTINGS AND TWO FEET BEYOND PAVEMENT EDGES.

25. CONCRETE FLATWORK, SLAB–ON–GRADE, AND SIDEWALK AREAS: GROUND SURFACES TO RECEIVE CONCRETE FLATWORK AND SIDEWALK SHALL BE OVEREXCAVATED TWO FEET BELOW EXISTING GRADE OR TWO FEET BELOW BOTTOM OF THE CONCRETE, WHICHEVER IS GREATER. THE BOTTOM OF THE OVEREXCAVATION SHALL BE SCARIFIED AND COMPACTED TO A MINIMUM DEPTH OF EIGHT INCHES. THE UPPER TWO FEET OF THE FINISH GRADE MUST BE NON–EXPANSIVE MATERIAL. THE ON–SITE EXPANSIVE CLAYEY SOIL IS NOT SUITABLE FOR THE UPPER TWO FEET OF THE FINISH GRADE. COMPACTION IN PROPOSED CONCRETE FLATWORK AND SIDEWALK AREA SHALL BE A MINIMUM OF 90 PERCENT OF THE MAXIMUM DENSITY PER ASTM D–1557. WORK TO LINES TWO FEET BEYOND THE OUTSIDE EDGES OF CONCRETE.

26. BITUMINOUS PAVEMENT AREA PREPARATION: SCARIFY TO A MINIMUM DEPTH OF 12 INCHES BELOW THE GRADING PLANE IN CUT AREAS OR TO 12 INCHES IN AREAS TO RECEIVE FILL. MOISTEN TO AT OR ABOVE THE OPTIMUM MOISTURE CONTENT, AND RECOMPACT TO A MINIMUM OF 90% OF THE MAXIMUM DENSITY PER ASTM D1557. ENGINEERED FILL PLACED IN PROPOSED PAVEMENT AREAS SHALL BE COMPACTED TO A MINIMUM OF 90 PERCENT OF THE MAXIMUM DENSITY AS OBTAINED BY ASTM TEST METHOD D1557, AND SHOULD EXTEND TO A MINIMUM OF TWO FEET BEYOND THE OUTSIDE EDGES OF PAVEMENT.

27. ALL TRENCHES AND EXCAVATIONS SHALL BE CONSTRUCTED IN STRICT COMPLIANCE WITH THE APPLICABLE CALIFORNIA AND FEDERAL O.S.H.A. REQUIREMENTS AND OTHER APPLICABLE SAFETY ORDINANCES. CONTRACTOR SHALL BEAR FULL RESPONSIBILITY FOR TRENCH SHORING DESIGN AND INSTALLATION. CONTRACTORS SHALL OBTAIN APPLICABLE O.S.H.A. PERMITS WHEN WORKMEN MUST ENTER TRENCHES GREATER THAN FIVE FEET.

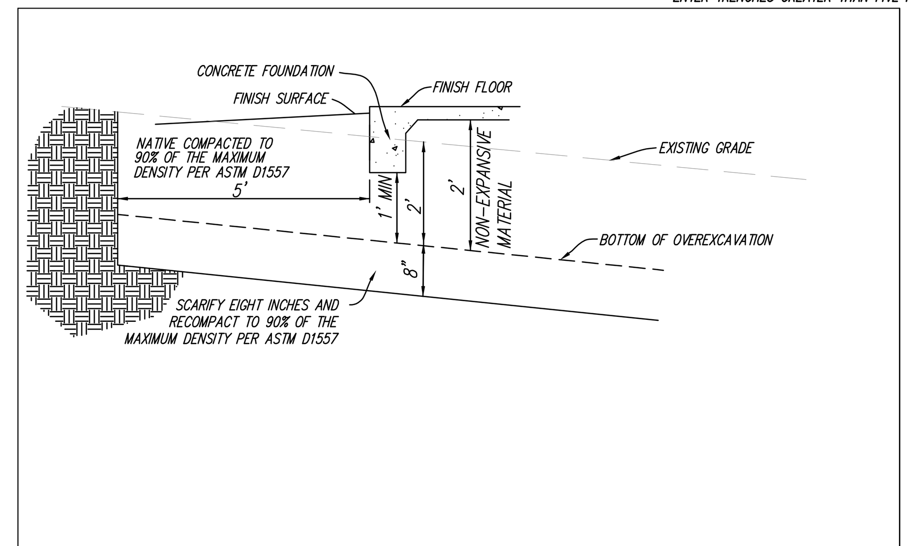

1 / C2 BUILDING OVEREXCAVATION SECTION
COMPLY WITH SOIL REPORT

N

SCALE: 1" = 10'
10 5 0 10 20

SWANSON ENGINEERING, INC.
2000 OAK STREET SUITE 150 • BAKERSFIELD, CA 93301
p (661) 831-4919; f (661) 873-4777
JOB# 22–045 RTS

REGISTERED PROFESSIONAL ENGINEER
No. 43032
EXP: 3-31-26
STATE OF CALIFORNIA

IDENTIFICATION STAMP
DIV. OF THE STATE ARCHITECT
APP: 03-122528 INC:
REVIEWED FOR
SS ☑ FLS ☑ ACS ☑
DATE: 01/06/2025

PTN : 63529-385 FILE: 15-H3

HIGHLAND HIGH SCHOOL
CAFETERIA MODERNIZATION
2900 ROYAL SCOTS WAY
FOR
KERN HIGH SCHOOL DISTRICT
BAKERSFIED, KERN COUNTY, CALIFORNIA

ARCHITECT SC inc.
1601 NEW STINE ROAD, SUITE 280
BAKERSFIED, CA 93309
PH: (661) 397-4377
FAX: (661) 397-4378
WWW.SCARCHITECT.COM

LICENSED ARCHITECT C-16793
STEPHEN J. CORBIN, NCARB, AIA, LEED ®-AP

CHECK AND VERIFY ALL DIMENSIONS BEFORE PROCEEDING WITH THE WORK. REPORT DISCREPANCIES TO THE ARCHITECT. ALL CONSTRUCTION SHALL CONFORM TO THE C.B.C.

KERN HIGH SCHOOL DISTRICT
Tradition of Excellence
Est. 1893

GRADING PLAN
GRADING NOTES

MARK	DATE	REVISIONS
1		
2		
3		

JOB NO. 22-045
DRAWN :
CHECKED :
DATE : 9-8-24

C
2 OF SHEETS

Fiber Rolls SE-5

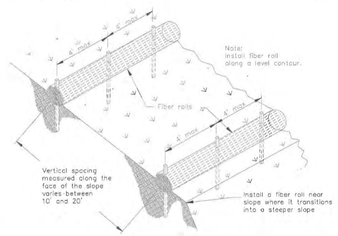

TYPICAL FIBER ROLL INSTALLATION
N.T.S.

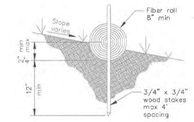

ENTRENCHMENT DETAIL
N.T.S.

Street Sweeping and Vacuuming SE-7

Categories		
EC	Erosion Control	
SE	Sediment Control	☒
TC	Tracking Control	☑
WE	Wind Erosion Control	
NS	Non-Stormwater Management Control	
WM	Waste Management and Materials Pollution Control	

Legend:
☑ Primary Objective
☒ Secondary Objective

Targeted Constituents	
Sediment	☒
Nutrients	
Trash	☑
Metals	
Bacteria	
Oil and Grease	☒
Organics	

Potential Alternatives

None

Description and Purpose

Street sweeping and vacuuming includes use of self-propelled and walk-behind equipment to remove sediment from streets and roadways, and to clean paved surfaces in preparation for final paving. Sweeping and vacuuming prevents sediment from the project site from entering storm drains or receiving waters.

Suitable Applications

Sweeping and vacuuming are suitable anywhere sediment is tracked from the project site onto public or private paved streets and roads, typically at points of egress. Sweeping and vacuuming are also applicable during preparation of paved surfaces for final paving.

Limitations

Sweeping and vacuuming may not be effective when sediment is wet or when tracked soil is caked (caked soil may need to be scraped loose).

Implementation

- Controlling the number of points where vehicles can leave the site will allow sweeping and vacuuming efforts to be focused, and perhaps save money.
- Inspect potential sediment tracking locations daily.
- Visible sediment tracking should be swept or vacuumed on a daily basis.
- Do not use kick brooms or sweeper attachments. These tend to spread the dirt rather than remove it.

Street Sweeping and Vacuuming SE-7

- If not mixed with debris or trash, consider incorporating the removed sediment back into the project

Costs

Rental rates for self-propelled sweepers vary depending on hopper size and duration of rental. Expect rental rates from $58/hour (3 yd³ hopper) to $88/hour (9 yd³ hopper), plus operator costs. Hourly production rates vary with the amount of area to be swept and amount of sediment. Match the hopper size to the area and expect sediment load to minimize time spent dumping.

Inspection and Maintenance

- Inspect BMPs in accordance with General Permit requirements for the associated project type and risk level. It is recommended that at a minimum, BMPs be inspected weekly, prior to forecasted rain events, daily during extended rain events, and after the conclusion of rain events.
- When actively in use, points of ingress and egress must be inspected daily.
- When tracked or spilled sediment is observed outside the construction limits, it must be removed at least daily. More frequent removal, even continuous removal, may be required in some jurisdictions.
- Be careful not to sweep up any unknown substance or any object that may be potentially hazardous.
- Adjust brooms frequently; maximize efficiency of sweeping operations.
- After sweeping is finished, properly dispose of sweeper wastes at an approved dumpsite.

References

Stormwater Quality Handbooks - Construction Site Best Management Practices (BMPs) Manual, State of California Department of Transportation (Caltrans), November 2000.

Labor Surcharge and Equipment Rental Rates, State of California Department of Transportation (Caltrans), April 1, 2002 – March 31, 2003.

FIBER ROLL PER CASQA DETAIL SE-5

SANDBAGS AROUND DRAIN INLET PER CASQA DETAIL SE-8 (TYP)

BMP NOTES:

1. NON-STORM WATER DISCHARGES ARE PROHIBITED FROM ENTERING ANY STORM DRAIN SYSTEM
2. POLLUTANTS SHALL BE REMOVED FROM STORM WATER DISCHARGES TO THE MAXIMUM EXTENT PRACTICAL.
3. PORTABLE SANITARY FACILITIES SHALL BE LOCATED ON RELATIVELY LEVEL GROUND AWAY FROM TRAFFIC AREAS, DRAINAGE COURSES, AND STORM DRAIN INLETS.
4. EMPLOYEES, SUBCONTRACTORS AND SUPPLIERS SHALL BE EDUCATED ON ALL BMPS, INCLUDING CONCRETE WASTE STORAGE AND DISPOSAL PROCEDURES.
5. SEDIMENT CONTROL PRACTICES SHALL EFFECTIVELY PREVENT A NET INCREASE OF SEDIMENT LOAD IN STORM WATER DISCHARGE.
6. WATER SITE IN COMPLIANCE W/ CASQA WE-1.
7. SWEEP STREET DAILY IN COMPLIANCE W/ CASQA SE-7.

N

SCALE: 1" = 10'

10 5 0 10 20

REGISTERED PROFESSIONAL ENGINEER
ROBERT T. SWANSON
No. 43032
EXP. 3-31-26
STATE OF CALIFORNIA

SWANSON ENGINEERING, INC.
© 2025
2000 OAK STREET SUITE 150 – BAKERSFIELD, CA 93301
p:(661) 831-4919; f:(661) 873-4777

JOB# 22-045 RTS

IDENTIFICATION STAMP
DIV. OF THE STATE ARCHITECT
APP: 03-122528 INC:
REVIEWED FOR
SS ☑ FLS ☑ ACS ☑
DATE: 01/06/2025

PTN: 63529-385 FILE: 15-H3

HIGHLAND HIGH SCHOOL
CAFETERIA MODERNIZATION
2900 ROYAL SCOTS WAY
FOR
KERN HIGH SCHOOL DISTRICT
BAKERSFIELD, KERN COUNTY, CALIFORNIA

ARCHITECT SCA INC.
1601 NEW STINE ROAD, SUITE 280
BAKERSFIELD, CA 93309
PH: (661) 397-4377
FAX: (661) 397-4378
WWW.SCARCHITECT.COM

LICENSED ARCHITECT
STEPHEN J. CORBIN
C-16785
EXP. 12-31-25
STATE OF CALIFORNIA

STEPHEN J. CORBIN, NCARB, AIA, LEED ®-AP

CHECK AND VERIFY ALL DIMENSIONS BEFORE PROCEEDING WITH THE WORK. REPORT DISCREPANCIES TO THE ARCHITECT. ALL CONSTRUCTION SHALL CONFORM TO THE C.B.C.

KERN HIGH SCHOOL DISTRICT
Tradition of Excellence
Est. 1893

EROSION CONTROL PLAN

MARK	DATE	REVISIONS
1		
2		
3		

JOB NO.
DRAWN :
CHECKED :
DATE : 9-8-24

C

3 OF SHEETS

Concrete Waste Management WM-8

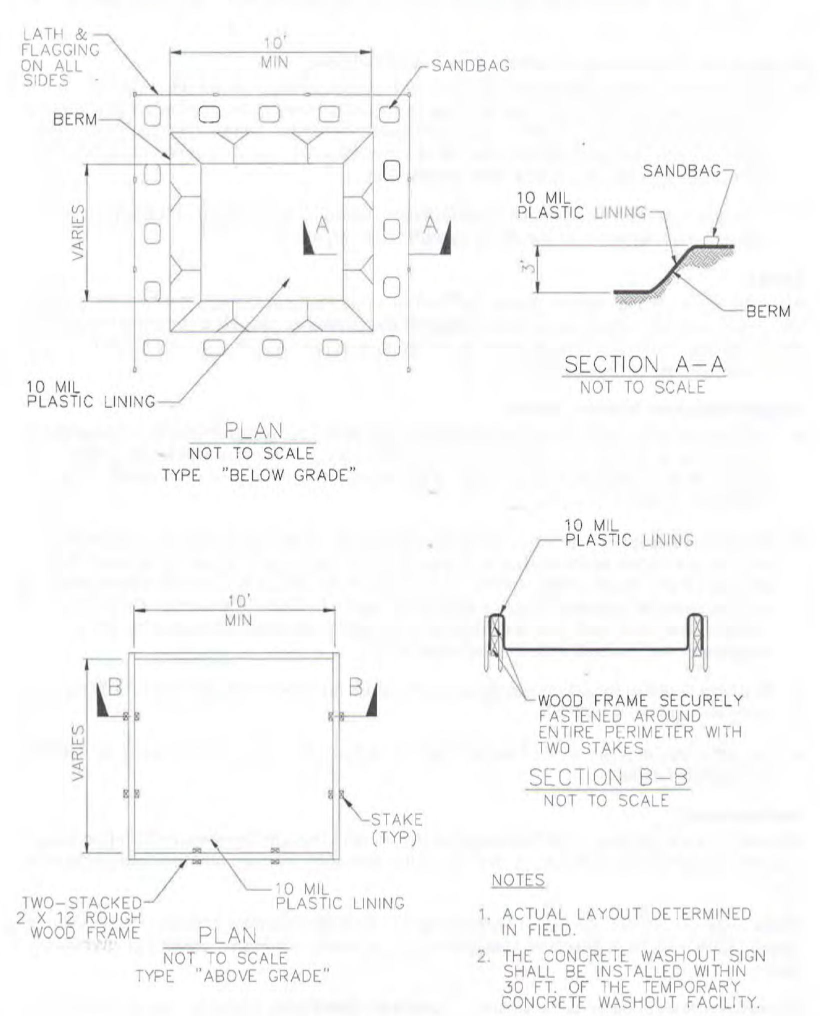

Concrete Waste Management WM-8

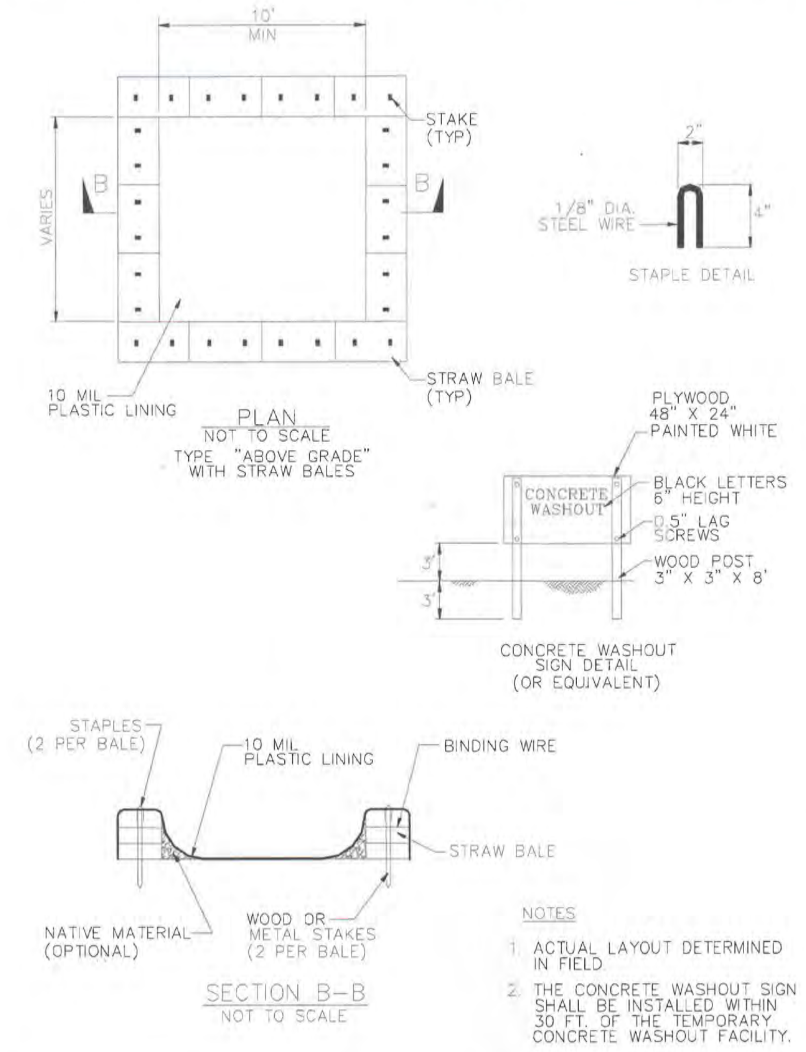

Sandbag Barrier SE-8

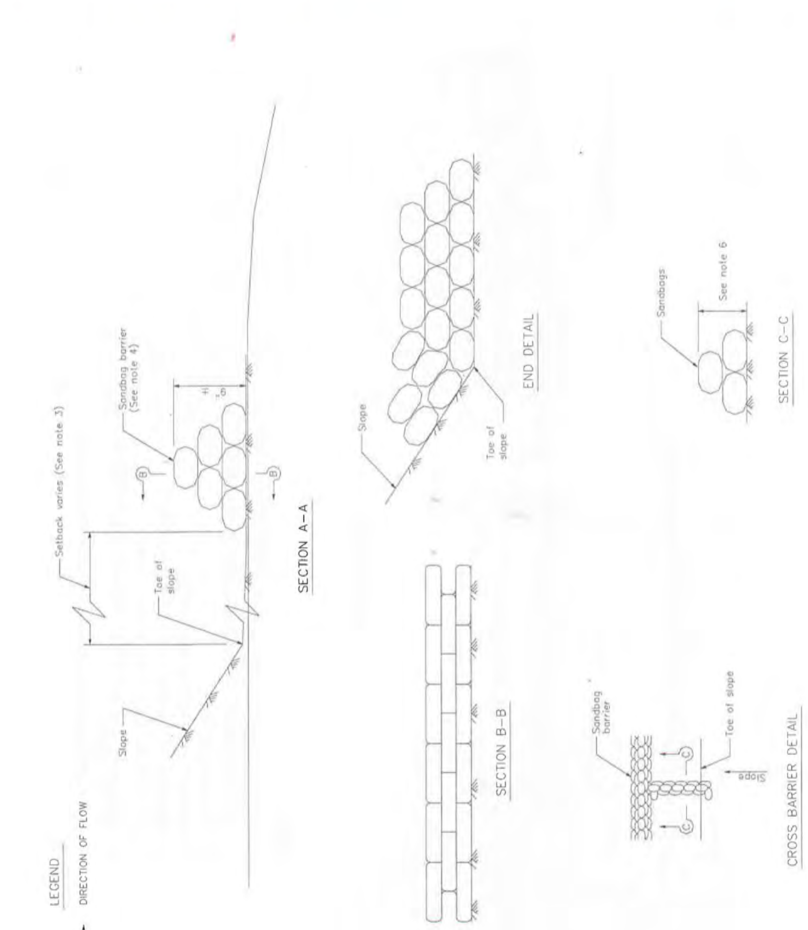

Sandbag Barrier SE-8

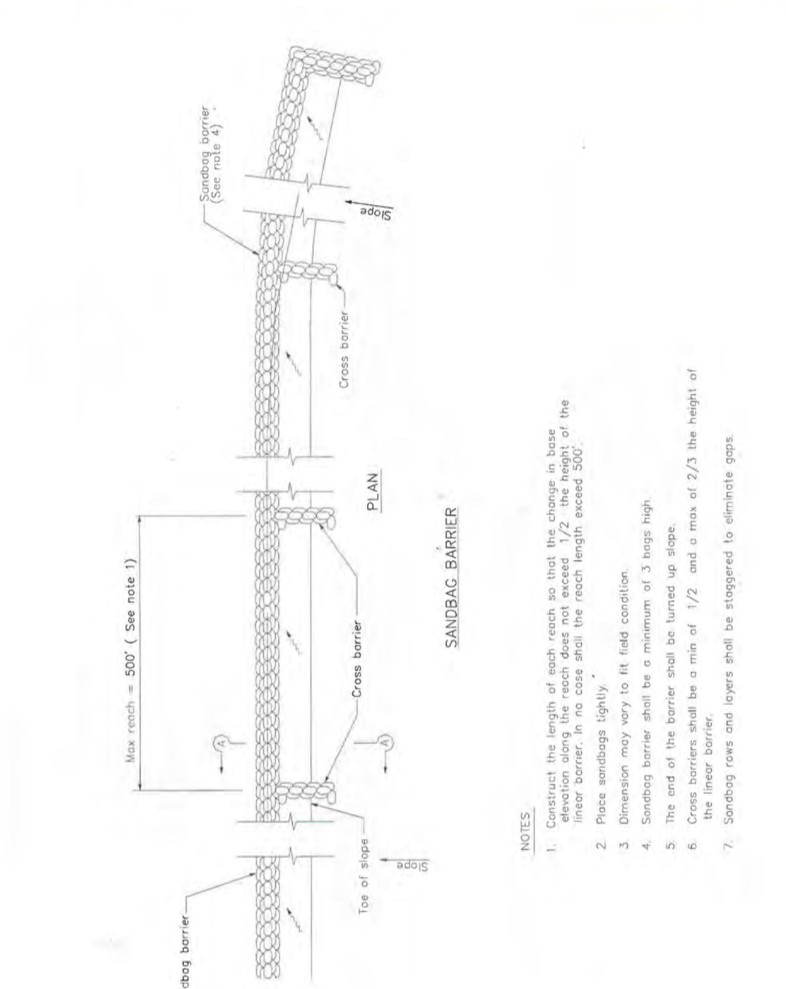

Wind Erosion Control WE-1

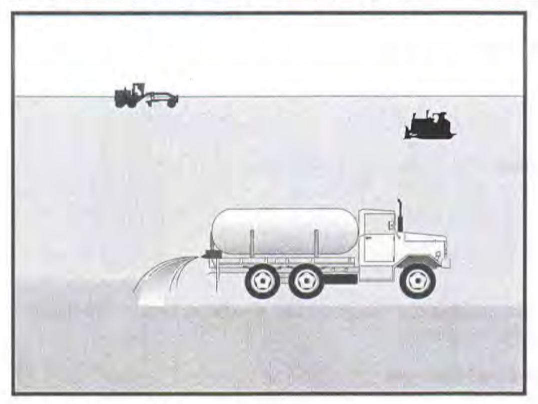

Categories

EC	Erosion Control	
SE	Sediment Control	☒
TC	Tracking Control	
WE	Wind Erosion Control	☑
NS	Non-Stormwater Management Control	
WM	Waste Management and Materials Pollution Control	

Legend:
☑ **Primary Category**
☒ **Secondary Category**

Targeted Constituents

Sediment	☑
Nutrients	
Trash	
Metals	
Bacteria	
Oil and Grease	
Organics	

Potential Alternatives

EC-5 Soil Binders

Description and Purpose

Wind erosion or dust control consists of applying water or other chemical dust suppressants as necessary to prevent or alleviate dust nuisance generated by construction activities. Covering small stockpiles or areas is an alternative to applying water or other dust palliatives.

California's Mediterranean climate, with a short "wet" season and a typically long, hot "dry" season, allows the soils to thoroughly dry out. During the dry season, construction activities are at their peak, and disturbed and exposed areas are increasingly subject to wind erosion, sediment tracking and dust generated by construction equipment. Site conditions and climate can make dust control more of an erosion problem than water based erosion. Additionally, many local agencies, including Air Quality Management Districts, require dust control and/or dust control permits in order to comply with local nuisance laws, opacity laws (visibility impairment) and the requirements of the Clean Air Act. Wind erosion control is required to be implemented at all construction sites greater than 1 acre by the General Permit.

Suitable Applications

Most BMPs that provide protection against water-based erosion will also protect against wind-based erosion and dust control requirements required by other agencies will generally meet wind erosion control requirements for water quality protection. Wind erosion control BMPs are suitable during the following construction activities:

CASQA
CALIFORNIA STORMWATER QUALITY ASSOCIATION

Wind Erosion Control WE-1

- Construction vehicle traffic on unpaved roads
- Drilling and blasting activities
- Soils and debris storage piles
- Batch drop from front-end loaders
- Areas with unstabilized soil
- Final grading/site stabilization

Limitations

- Watering prevents dust only for a short period (generally less than a few hours) and should be applied daily (or more often) to be effective.
- Over watering may cause erosion and track-out.
- Oil or oil-treated subgrade should not be used for dust control because the oil may migrate into drainageways and/or seep into the soil.
- Chemical dust suppression agents may have potential environmental impacts. Selected chemical dust control agents should be environmentally benign.
- Effectiveness of controls depends on soil, temperature, humidity, wind velocity and traffic.
- Chemical dust suppression agents should not be used within 100 feet of wetlands or water bodies.
- Chemically treated subgrades may make the soil water repellant, interfering with long-term infiltration and the vegetation/re-vegetation of the site. Some chemical dust suppressants may be subject to freezing and may contain solvents and should be handled properly.
- In compacted areas, watering and other liquid dust control measures may wash sediment or other constituents into the drainage system.
- If the soil surface has minimal natural moisture, the affected area may need to be pre-wetted so that chemical dust control agents can uniformly penetrate the soil surface.

Implementation

Dust Control Practices

Dust control BMPs generally stabilize exposed surfaces and minimize activities that suspend or track dust particles. The following table presents dust control practices that can be applied to varying site conditions that could potentially cause dust. For heavily traveled and disturbed areas, wet suppression (watering), chemical dust suppression, gravel asphalt surfacing, temporary gravel construction entrances, equipment wash-out areas, and haul truck covers can be employed as dust control applications. Permanent or temporary vegetation and mulching can be employed for areas of occasional or no construction traffic. Preventive measures include minimizing surface areas to be disturbed, limiting onsite vehicle traffic to 15 mph or less, and controlling the number and activity of vehicles on a site at any given time.

Wind Erosion Control WE-1

Chemical dust suppressants include: mulch and fiber based dust palliatives (e.g. paper mulch with gypsum binder), salts and brines (e.g. calcium chloride, magnesium chloride), non-petroleum based organics (e.g. vegetable oil, lignosulfonate), petroleum based organics (e.g. asphalt emulsion, dust oils, petroleum resins), synthetic polymers (e.g. polyvinyl acetate, vinyls, acrylic), clay additives (e.g. bentonite, montimorillonite) and electrochemical products (e.g. enzymes, ionic products).

Site Condition	Dust Control Practices							
	Permanent Vegetation	Mulching	Wet Suppression (Watering)	Chemical Dust Suppression	Gravel or Asphalt	Temporary Gravel Construction Entrances/Equipment Wash Down	Synthetic Covers	Minimize Extent of Disturbed Area
Disturbed Areas not Subject to Traffic	X	X	X	X	X			X
Disturbed Areas Subject to Traffic			X	X	X	X		X
Material Stockpiles		X	X	X			X	X
Demolition			X			X	X	
Clearing/ Excavation			X	X				X
Truck Traffic on Unpaved Roads			X	X	X	X	X	
Tracking					X	X		

Additional preventive measures include:

- Schedule construction activities to minimize exposed area (see EC-1, Scheduling).
- Quickly treat exposed soils using water, mulching, chemical dust suppressants, or stone/gravel layering.
- Identify and stabilize key access points prior to commencement of construction.
- Minimize the impact of dust by anticipating the direction of prevailing winds.
- Restrict construction traffic to stabilized roadways within the project site, as practicable.
- Water should be applied by means of pressure-type distributors or pipelines equipped with a spray system or hoses and nozzles that will ensure even distribution.
- All distribution equipment should be equipped with a positive means of shutoff.
- Unless water is applied by means of pipelines, at least one mobile unit should be available at all times to apply water or dust palliative to the project.
- If reclaimed waste water is used, the sources and discharge must meet California Department of Health Services water reclamation criteria and the Regional Water Quality

Wind Erosion Control WE-1

Control Board (RWQCB) requirements. Non-potable water should not be conveyed in tanks or drain pipes that will be used to convey potable water and there should be no connection between potable and non-potable supplies. Non-potable tanks, pipes, and other conveyances should be marked, "NON-POTABLE WATER - DO NOT DRINK."

- Pave or chemically stabilize access points where unpaved traffic surfaces adjoin paved roads.
- Provide covers for haul trucks transporting materials that contribute to dust.
- Provide for rapid clean up of sediments deposited on paved roads. Furnish stabilized construction road entrances and wheel wash areas.
- Stabilize inactive areas of construction sites using temporary vegetation or chemical stabilization methods.

For chemical stabilization, there are many products available for chemically stabilizing gravel roadways and stockpiles. If chemical stabilization is used, the chemicals should not create any adverse effects on stormwater, plant life, or groundwater and should meet all applicable regulatory requirements.

Costs

Installation costs for water and chemical dust suppression vary based on the method used and the length of effectiveness. Annual costs may be high since some of these measures are effective for only a few hours to a few days.

Inspection and Maintenance

- Inspect and verify that activity-based BMPs are in place prior to the commencement of associated activities.
- BMPs must be inspected in accordance with General Permit requirements for the associated project type and risk level. It is recommended that at a minimum, BMPs be inspected weekly, prior to forecasted rain events, daily during extended rain events, and after the conclusion of rain events.
- Check areas protected to ensure coverage.
- Most water-based dust control measures require frequent application, often daily or even multiple times per day. Obtain vendor or independent information on longevity of chemical dust suppressants.

References

Best Management Practices and Erosion Control Manual for Construction Sites, Flood Control District of Maricopa County, Arizona, September 1992.

California Air Pollution Control Laws, California Air Resources Board, updated annually.

Construction Manual, Chapter 4, Section 10, "Dust Control"; Section 17, "Watering"; and Section 18, "Dust Palliative", California Department of Transportation (Caltrans), July 2001.

IDENTIFICATION STAMP
DIV. OF THE STATE ARCHITECT
APP: 03-122528 INC:
REVIEWED FOR
SS ☑ FLS ☑ ACS ☑
DATE: 01/06/2025

PTN : 63529-385 FILE: 15-H3

HIGHLAND HIGH SCHOOL
CAFETERIA MODERNIZATION
2900 ROYAL SCOTS WAY
FOR
KERN HIGH SCHOOL DISTRICT
BAKERSFIED, KERN COUNTY, CALIFORNIA

ARCHITECT SC inc.
1601 NEW STINE ROAD, SUITE 280
BAKERSFIELD, CA 93309
PH: (661) 397-4377
FAX: (661) 397-4378
WWW.SCARCHITECT.COM

STEPHEN J. CORBIN, NCARB, AIA, LEED ®AP

CHECK AND VERIFY ALL DIMENSIONS BEFORE PROCEEDING WITH THE WORK. REPORT DISCREPANCIES TO THE ARCHITECT. ALL CONSTRUCTION SHALL CONFORM TO THE C.B.C.

KERN HIGH SCHOOL DISTRICT
Tradition of Excellence

BMP DETAILS

MARK	DATE	REVISIONS
1		
2		
3		

REGISTERED PROFESSIONAL ENGINEER
ROBERT T. SWANSON
No. 43032
EXP. 3-31-26
STATE OF CALIFORNIA

SWANSON ENGINEERING, INC.
© 2020
2000 OAK STREET SUITE 150 ~ BAKERSFIELD, CA 93301
p:(661) 831-4919; f:(661) 873-4777
JOB#– 22–045 RTS

JOB NO.
DRAWN :
CHECKED :
DATE : 9–8–24

C
4
OF SHEETS

DSA **810**

FIRE & LIFE SAFETY SITE CONDITIONS SUBMITTAL

Division of the State Architect (DSA) documents referenced within this publication are available on the DSA Forms or DSA Publications webpages.

To facilitate the Division of the State Architect's (DSA) fire and life safety plan review of project site conditions, DSA requires the design professional to provide the following information at time of project submittal for projects consisting of construction of a new campus, construction of new building(s), additions to existing buildings, and for site alternate design means for fire department emergency vehicle access, and fire suppression water supply.

Information associated with compliance items 1 through 3 below is to be provided for all project types indicated above. Information associated with items 4 through 7 is to be completed when an alternate means is utilized. Acknowledgement by the school district and signature from the Local Fire Authority (LFA) is only required when an alternate design means is being requested.

The Project Information and Fire & Life Safety Information sections are to be completed for all projects and imaged onto the fire access site plan. When an alternate design/means is proposed, all sections on pages 1 and 2 are to be completed and imaged on the fire access site plan.

For additional information refer to the instructions at the end of this form and DSA Policy *PL 09-01: Fire Flow for Buildings*.

PROJECT INFORMATION
School District/Owner: KERN HIGH SCHOOL DISTRICT
Project Name/School: CAFETERIA MODERNIZATION/ HIGHLAND HIGH SCHOOL
Project Address: 2400 ROYAL SCOTS WAY, BAKERSFIELD, CA, 93306

FIRE & LIFE SAFETY INFORMATION				
1.	Has a fire hydrant flow test been performed within the past 12 months? *(If yes, provide a copy of the test data.)*	Yes ☑		No ☐
2.	Was the fire hydrant water flow test performed as part of this LFA review?	Yes ☑		No ☐
3.	Is the project located within a designated fire hazard severity zone (FHSZ) as established by Cal-Fire? *(If yes, indicate FHSZ classification below.)*	Yes ☐		No ☑
	Refer to the following website for FHSZ locations: http://egis.fire.ca.gov/FHSZ/	Moderate ☐	High ☐	Very High ☐
	Wildland Interface Area (WIFA) *(If any designations are checked, project design must meet the requirements of CBC Chapter 7A.)*			WIFA ☐

	CONDITION MEANS AND METHODS RESOLUTION	ALTERNATE ACCEPTED Yes	No	N/A	N/R
4.	Emergency vehicle access roadways do not meet CFC requirements.			✓	
4a.	**Acceptable Alternate:** Emergency vehicle and personnel access as proposed by the project architect is acceptable for providing fire suppression and protection of life and property.				
5.	**Fire Hydrants:** Number and spacing does not meet CFC requirements.			✓	
5a.	**Acceptable Alternate:** Number of fire hydrants and spacing as proposed by the project architect is acceptable for fire suppression and protection of life and property.				
6.	**Fire Hydrants:** Water flow and pressure are less than CFC minimum.			✓	
6a.	**Acceptable Alternate:** The available flow and pressure is acceptable for providing fire suppression and protection of life and property.				
7.	Location of fire department connection(s) serving fire sprinkler systems or standpipe systems does not meet CFC requirements.				✓
7a.	**Acceptable Alternate:** The location of fire department connection serving the fire sprinkler system and/or standpipe system is acceptable for providing fire suppression and protection of life and property.				

School District Acceptance of Acceptable Design Alternates

By signing this form, the school district acknowledges and accepts the proposed design as an alternative to California Building Code (CBC) and California Fire Code (CFC) minimum requirements, as indicated by one or more of the conditions indicated at items 4a, 5a, 6a or 7a, for providing fire and life safety protection of life and property.

Accepted by: CHRIS KOURAFAS Title: Asst. Director Facilities Planning

Signature: _____ Date: _____

LOCAL FIRE AUTHORITY (LFA) INFORMATION	
LFA Agency Name: BAKERSFIELD FIRE DEPARTMENT	
LFA Review Official: ERNIE MEDINA	
Title: FIRE PLANS EXAMINER	Work Phone: (661) 326-3682
Work Email: EMEDINA@BAKERSFIELDFIRE.US	
LFA Reviewer's Signature: Ernie Medina	Date: 8/19/22

Hydrant Flow Test Report

Test Date 7/8/2022 **Test Time** 4:20 PM

Location
Highland High School
2900 Royal Scots Way
Bakersfield, CA 93306

Tested by
Another In The Fire
16022 San Marco Pl
Bakersfield, Ca. 93314
C-16 License #1078553
NICET Cert. #149354
David Holt & Robert Wroe

Notes
Hydrant #2

Read Hydrant
76 psi **static pressure**
31 psi **residual pressure**
1-6 ft **hydrant elevation**

Flow Hydrant(s)

Outlet	Elev	Size	C	Pitot Pressure	Flow
#1		4	.9	18	1823 gpm

Flow Graph

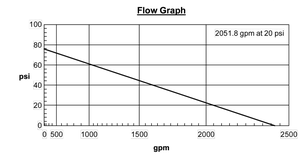

Created with the free hydrant flow test program from www.igneusinc.com

PARKING ANALYSIS

(E) PARKING LOT "A"
PER A#03-117215
REGULAR STALLS 5
ACCESSIBLE STALLS 1
ACCESSIBLE VAN STALL +1
TOTAL 7

(E) PARKING LOT "B"
PER A#03-105643
REGULAR STALLS 14
ACCESSIBLE STALLS 1
ACCESSIBLE VAN STALL +1
TOTAL 16

(E) PARKING LOT "C"
PER A#03-117215
REGULAR STALLS 8
ACCESSIBLE STALLS 1
ACCESSIBLE VAN STALL +2
TOTAL 29

(E) PARKING LOT "D"
PER A#03-120842
REGULAR STALLS 2
ACCESSIBLE STALLS 1
ACCESSIBLE VAN STALL +1
TOTAL 4

LEGEND:

- NO WORK SCHEDULE FOR THIS BUILDING
- AREA OF SCHEDULED WORK PER THIS APPLICATION
- CONCRETE WALK (5 / A1.0-4)
- AC PAVING (3 / A1.0-4)
- (E) ACCESSIBLE RESTROOM
- SAFE DISPERSAL AREA
- PATH OF TRAVEL
- PROPERTY LINE
- (E) STEEL FENCE
- (E) CHAIN LINK FENCE
- (E) FIRE DEPARTMENT ACCESS

PATH OF TRAVEL:

"DESIGN PROFESSIONAL IN GENERAL RESPONSIBLE CHARGE STATEMENT: THE POT IDENTIFIED IN THESE CONSTRUCTION DOCUMENTS IS COMPLIANT WITH THE CURRENT APPLICABLE CALIFORNIA BUILDING CODE ACCESSIBILITY PROVISIONS FOR PATH OF TRAVEL REQUIREMENTS FOR ALTERATIONS, ADDITIONS AND STRUCTURAL REPAIRS. AS PART OF THE DESIGN OF THIS PROJECT, THE POT WAS EXAMINED AND ANY ELEMENTS, COMPONENTS OR PORTIONS OF THE POT THAT WERE DETERMINED TO BE NONCOMPLIANT 1) HAVE BEEN IDENTIFIED AND 2) THE CORRECTIVE WORK NECESSARY TO BRING THEM INTO COMPLIANCE HAS BEEN INCLUDED WITHIN THE SCOPE OF THIS PROJECTS WORK THROUGH DETAILS, DRAWINGS AND SPECIFICATIONS INCORPORATED INTO THESE CONSTRUCTION DOCUMENTS. ANY NONCOMPLIANT ELEMENTS, COMPONENTS OR PORTIONS OF THE POT THAT WILL NOT BE CORRECTED BY THIS PROJECT BASED ON VALUATION THRESHOLD LIMITATIONS OR A FINDING OF UNREASONABLE HARDSHIP ARE SO INDICATED IN THESE CONSTRUCTION DOCUMENTS.

DURING CONSTRUCTION, IF POT ITEMS WITHIN THE SCOPE OF THE PROJECT REPRESENTED AS CODE COMPLIANT ARE FOUND TO BE NONCONFORMING BEYOND REASONABLE CONSTRUCTION TOLERANCES THEY SHALL BE BROUGHT INTO COMPLIANCE WITH THE CBC AS PART OF THIS PROJECT BY MEANS OF A CONSTRUCTION CHANGE DOCUMENT."

PATH OF TRAVEL, TECHNICAL REQUIREMENTS FOR ACCESSIBLE ROUTE:

"ACCESSIBLE PATH OF TRAVEL AS INDICATED ON PLAN IS A BARRIER-FREE ACCESS ROUTE WITHOUT ABRUPT LEVEL CHANGES EXCEEDING ½" IF BEVELED AT 1:2 MAXIMUM SLOPE OR VERTICAL LEVEL CHANGES NOT EXCEEDING ¼" MAXIMUM AND AT LEAST 48" IN WIDTH SURFACE IS STABLE, FIRM, AND SLIP-RESISTANT. CROSS-SLOPE SHALL NOT BE STEEPER THAN 1:48 AND SLOPE IN THE DIRECTION OF TRAVEL SHALL NOT BE STEEPER THAN 1:20. ACCESSIBLE PATH OF TRAVEL SHALL BE MAINTAINED FREE OF OVERHANGING OBSTRUCTIONS TO 80" MINIMUM AND FREE OF OBJECTS PROTRUDING MORE THAN 4" FROM THE WALL, ABOVE 27" AND LESS THAN 80" ABOVE THE FLOOR. ARCHITECT SHALL VERIFY THAT THERE ARE NO BARRIERS IN THE PATH OF TRAVEL."

BUILDING CODE ANALYSIS

BUILDING DESIGNATION	BLDG OCC. TYPE	TYPE OF CONST	BASIC ALLOWABLE AREA	ACTUAL HT STRY/FT	ALLOWABLE STORIES/ HT ABV GRADE	STRUCT'L FRAME	EXTERIOR BEARING WALLS	NON-BEARING WALLS	FLR CONST	ROOF CONST	ROOF COVER	ACTUAL AREA		TOTAL SQUARE FOOTAGE
													TOTAL	
(E) 1000 CAFETERIA	A-2 *PER DSA IR A-26; KITCHEN, 1.10.1	II-A	15,500	1 STRY/25'-0"	3 STRY/65'-0"	I-HR	I-HR	0-HR	I-HR NOTE; (E) SOG	I-HR PER TABLE 601	TABLE 1505.1 CLASS B	10,215	14,075	14,075 < 15,500 ∴ OK
COVERED WALKWAY												3,860		

SAFE DISPERSAL AREA

PER CBC 2022 1028.5 / 452.1.3 / 109.6.3

MAX OCCUPANTS
X 3# = MIN AREA #

MAX OCC/200 = 422 X 3# = 1,266#
MIN WHEELCHAIR SP 422/200 = 2.11
REQ'D, W 2 SP MIN

SAFE DISPERSAL AREA INCLUDING WHEELCHAIR SPACE PROVIDE 30"X48" MIN PER WHEELCHAIR → 1,266# REQUIRED 40'X33' = 1,320# W (2) WHEELCHAIR SPACES PROVIDED, SEE SHEET A1.0 AREA (A)

CAMPUS DIRECTORY

UNIT #	UNIT DESCRIPTION	DSA A# (CERT STATUS/DATE)
(E) 100	ADMINISTRATION	31547, 03-105643 (YES/08-02-11)
(E) 200	LIBRARY, COMPUTER LAB	31547, 03-105643 (YES/08-02-11)
(E) 300	CLASSROOM, TOILET, WORKOUT	31547, 03-105643 (YES/08-02-11)
(E) 400	CLASSROOMS, WORKROOM	31547, 03-105643 (YES/08-02-11)
(E) 500	CLASSROOMS, SCIENCE, WORKROOM	31547, 03-105643 (YES/08-02-11)
(E) 600	CLASSROOMS, SCIENCE, SPECIAL ED	31547, 03-105643 (YES/08-02-11)
(E) 700	CLASSROOMS, WORKROOM	31547, 03-105643 (YES/08-02-11)
(E) 800	ART, CHOIR, BAND	31547, 03-105643 (YES/08-02-11)
(E) 900	AUDITORIUM	31547, 03-106490 (YES/01-10-11)
(E) 1000	CAFETERIA	31547, 03-105643 (YES/08-02-11)
(E) 1100A & 1100B	CLASSROOMS	31547, 03-105643 (YES/08-02-11)
(E) 1200	CLASSROOMS, MAINTENANCE	31547, 03-105643 (YES/08-02-11)
(E) 1300	GYMNASIUM	31547, 03-113387 (YES/11-22-13)
(E) 4PC-4PG	RELOCATABLE CLASSROOMS	31547, 03-105643 (YES/08-02-11)
(E) 4PH & 4PI	RELOCATABLE CLASSROOMS	04-116484 (YES/09-14-23)
(E) 14PA & 14PB	RELOCATABLE CLASSROOMS	03-118081 (YES/01-05-18)
(E) 14PG-14PJ	RELOCATABLE CLASSROOMS	-
(E) UNIT 1 & 2	RELOCATABLE CLASSROOMS	03-116564 (YES/06-21-17)
(E) 15-RR, 15-R1 TO R7	RELOCATABLE CLASSROOMS	03-119944 (YES/04-21-21)
(E) 16-R1 TO R5	RELOCATABLE CLASSROOMS	03-120840 (YES/02-08-22)
(E) A6-R1 TO R3, A6-RR	RELOCATABLE CLASSROOMS, RESTROOM	03-120842 (YES/02-14-23)
(E) R-00	NURSE'S OFFICE	03-121910
-	-	03-111813 (YES/07-17-13)
-	-	03-117215 (YES/07-06-17)

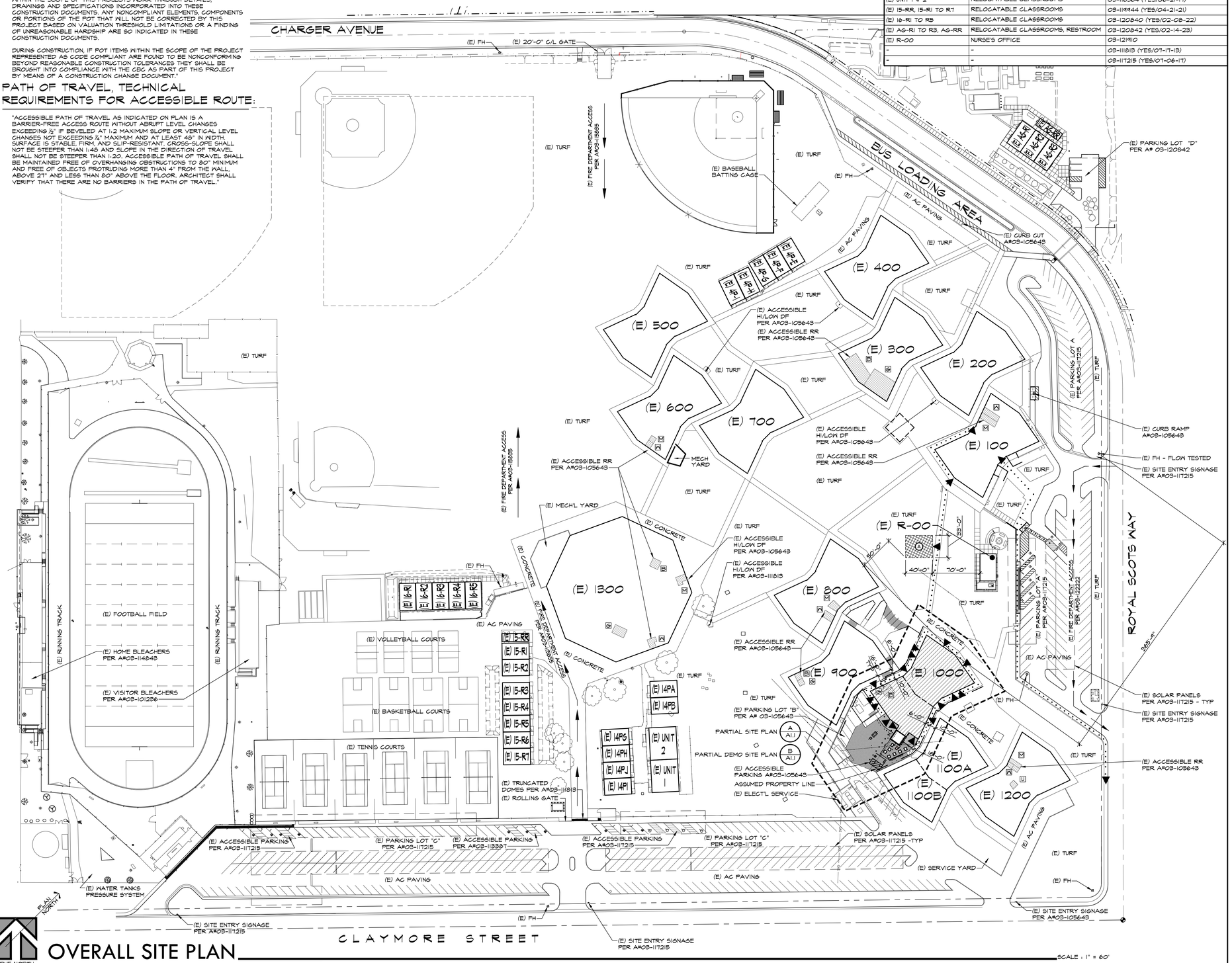

OVERALL SITE PLAN

SCALE : 1" = 60'

IDENTIFICATION STAMP
DIV. OF THE STATE ARCHITECT
APP: 03-122528 INC:
REVIEWED FOR
SS ☑ FLS ☑ ACS ☑
DATE: 01/06/2025

PTN : 63529-385 FILE: 15-H3

HIGHLAND HIGH SCHOOL

CAFETERIA REHABILITATION AND MODERNIZATION
2900 ROYAL SCOTS WAY
FOR
KERN HIGH SCHOOL DISTRICT
BAKERSFIELD, KERN COUNTY, CALIFORNIA

ARCHITECT SCI inc.
1601 NEW STINE ROAD, SUITE 280
BAKERSFIELD, CA 93309
PH: (661) 397-4377
FAX: (661) 397-4378
WWW.SCARCHITECT.COM

LICENSED ARCHITECT STEPHEN J. CORBIN C-16738 CALIFORNIA

STEPHEN J. CORBIN, NCARB, AIA, LEED ®-AP

CHECK AND VERIFY ALL DIMENSIONS BEFORE PROCEEDING WITH THE WORK. REPORT DISCREPANCIES TO THE ARCHITECT. ALL CONSTRUCTION SHALL CONFORM TO THE C.B.C.

KERN HIGH SCHOOL DISTRICT — Tradition of Excellence — Est. 1893

OVERALL SITE PLAN

MARK	DATE	REVISIONS
1		
2		
3		

JOB NO. 1319
DRAWN: ED, FJS
CHECKED: BCW
DATE: 9/25/24

1.0
5 OF 99 SHEETS

GATE SCHEDULE

GATE #	GATE SIZE (EACH LEAF)	MATL	FRAME MATL	HDWR #	ELEV	DETAIL	PANIC HDWR	REMARKS	GATE #
1	3'-0"x6'-8" (PAIR)	CL	MTL	-	-	23/A10.4	--	-	1
2	(E) 3'-4"x6'-0"	WI	MTL	-	-	-	--	-	2

LEGEND:

- AREA OF SCHEDULED WORK PER THIS APPLICATION
- CONCRETE WALK (5 / A10.4)
- AC PAVING (9 / A10.4)
- (E) CHAIN LINK FENCE

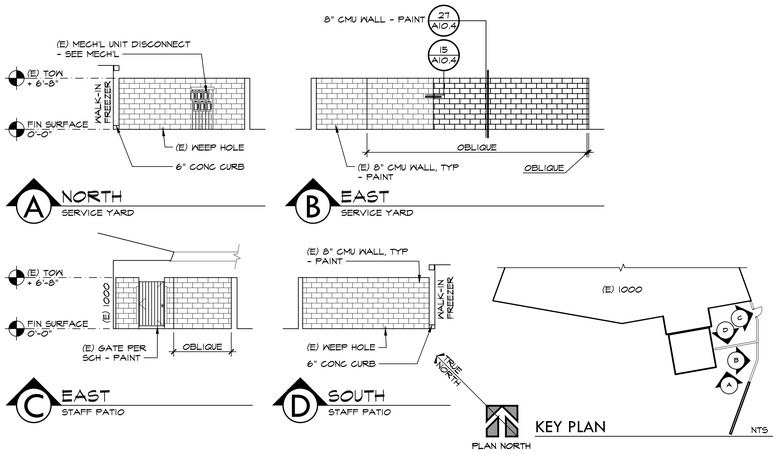

SITE ELEVATIONS

SCALE: 1/8" = 1'-0"

LEGEND:

- SAWCUT & DEMO (E) CONC WALK/ AC PAVING AS REQ'D (4 / A10.4)
- DEMO AS REQ'D

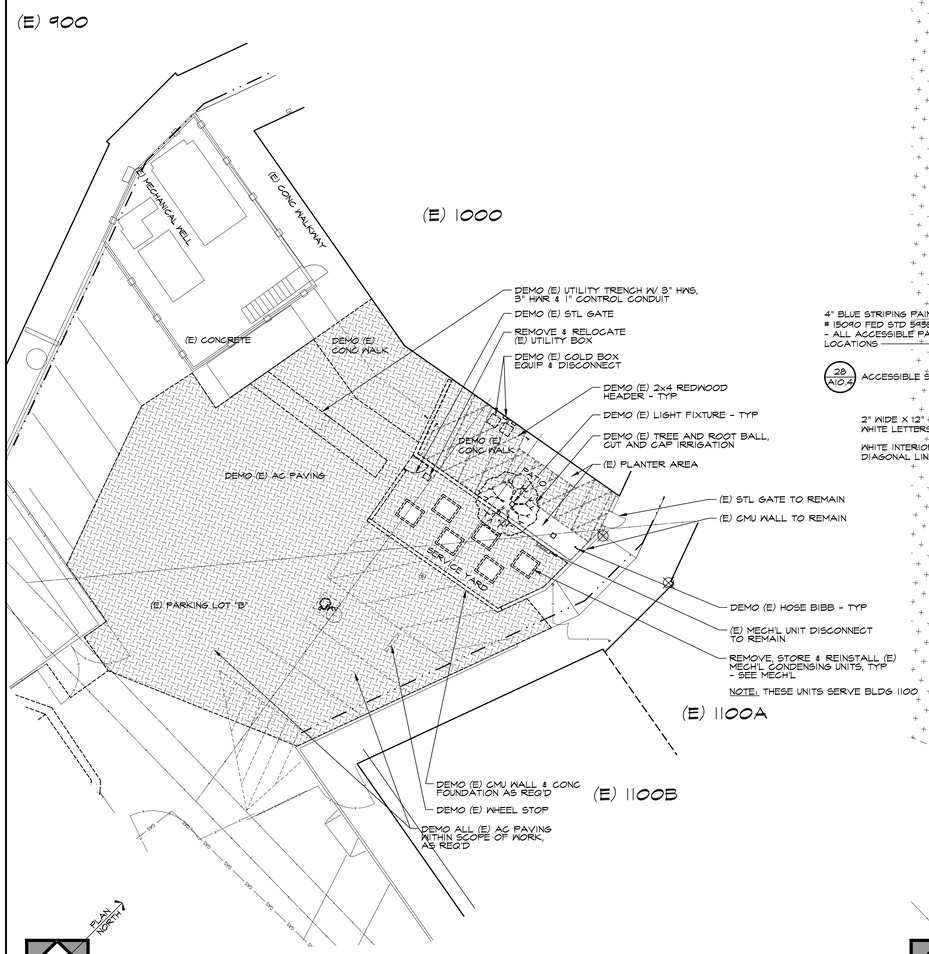

(B) PARTIAL DEMO SITE PLAN

SCALE : 1" = 10'-0"

(A) PARTIAL SITE PLAN

SCALE : 1/4" = 1'-0"

IDENTIFICATION STAMP
DIV. OF THE STATE ARCHITECT
APP: 03-122528 INC:
REVIEWED FOR
SS ☑ FLS ☑ ACS ☑
DATE: 01/06/2025

PTN : 63529-385 FILE: 15-H3

HIGHLAND HIGH SCHOOL

CAFETERIA REHABILITATION AND MODERNIZATION

2900 ROYAL SCOTS WAY
FOR
KERN HIGH SCHOOL DISTRICT
BAKERSFIELD, KERN COUNTY, CALIFORNIA

SCARCHITECT inc.
1601 NEW STINE ROAD, SUITE 280
BAKERSFIELD, CA 93309
PH: (661) 397-4377
FAX: (661) 397-4378
WWW.SCARCHITECT.COM

LICENSED ARCHITECT STEPHEN J. CORBIN No. C-16784 EXP. 12/31/25 STATE OF CALIFORNIA

STEPHEN J. CORBIN, NCARB, AIA, LEED ®-AP

CHECK AND VERIFY ALL DIMENSIONS BEFORE PROCEEDING WITH THE WORK. REPORT DISCREPANCIES TO THE ARCHITECT. ALL CONSTRUCTION SHALL CONFORM TO THE C.B.C.

KERN HIGH SCHOOL DISTRICT — Tradition of Excellence — EST. 1893

PARTIAL SITE PLAN, PARTIAL DEMO SITE PLAN & SITE ELEVATIONS

MARK	DATE	REVISIONS
1		
2		
3		

JOB NO. 1319
DRAWN : ED, FJS
CHECKED : BCW
DATE : 9/25/24

1.1
6 OF 99 SHEETS

WALL LEGEND:

(E) 8" CMU WALL

LEGEND:

SAWCUT & DEMO (E) CONC SLAB / WALK AS REQ'D (4 / A10.4)

NOTES:

1. CONTRACTOR SHALL REMOVE, STORE, PROTECT (E) WALL SCONE LIGHT FIXTURE &TURN OVER TO DISTRICT.
2. CONTRACTOR SHALL STORE & PROTECT (E) SMART BOARDS & MARKER BOARDS SCHEDULED FOR REMOVAL & TURN OVER TO DISTRICT.
3. CONTRACTOR TO REMOVE (E) PROJECTION SCREEN & TURN OVER TO DISTRICT.
4. CONTRACTOR TO REMOVE (E) CEILING MOUNTED PROJECTOR & TURN OVER TO DISTRICT.
5. COORDINATE LIMITS OF ALL CONCRETE SAW CUTTING WITH PLUMBING AND ELECTRICAL UTILITIES.
6. CONTRACTOR SHALL NOT CUT/DAMAGE ANY (E) REBAR OR (E) DOWELS IN (E) CONCRETE SLAB WITHIN 2'-0" OF (E) CMU WALLS WHERE THE (E) CONCRETE SLAB IS SCHEDULED TO BE DEMOLISHED AND REMOVED. (E) CONCRETE SLAB WITHIN 2'-0" OF THE (E) CMU WALLS SHALL BE CHIPPED WITHOUT DAMAGING (E) REINFORCEMENT. REFER TO DETAIL 15/S1.1.

KEYNOTES

202	DEMO (E) TRESHOLD
204	DEMO (E) SUSPENDED ACOUSTIC CEILING SYSTEM AS REQ'D
207	DEMO (E) FLOOR FINISH AS REQ'D PREP FOR FLOORING - SEE SCHEDULE
221	DEMO (E) SUSPENDED CEMENT PLASTER SOFFIT & (E) SOFFIT FRAMING AS REQ'D
225	DEMO (E) POWER COLUMN - SEE ELECTRICAL PLAN
227	(E) DOOR, FRAME & HARDWARE TO REMAIN
229	(E) TRESHOLD TO REMAIN
230	(E) STOREFRONT SYSTEM TO REMAIN
232	(E) FLOOR FINISH TO REMAIN
241	DEMO (E) PARTITION TRACK
242	DEMO (E) 8WF17 BM, ∠ 2½"X1½"X3/16" HANGER & ∠ 2½"X1½"X3/16" BRACE, WHERE BEAM IS EMBEDDED IN THE (E) CMU WALL, CUT THE BEAM AT THE FACE OF THE WALL WITHOUT DISTURBING THE WALL. GRIND SMOOTH TO BE FLUSH WITH FACE OF WALL.
243	REMOVE ALL (E) FIRE PROOFING FROM (E) T56 & (E) W8 RAFTER PERLIN - SEE HAZARDOUS MATL REMOVAL NOTES ON SHT T0.0 & DETAIL 4/A10.5 AND SHEET A8.0
244	DEMO (E) LIGHT FIXTURE ABOVE

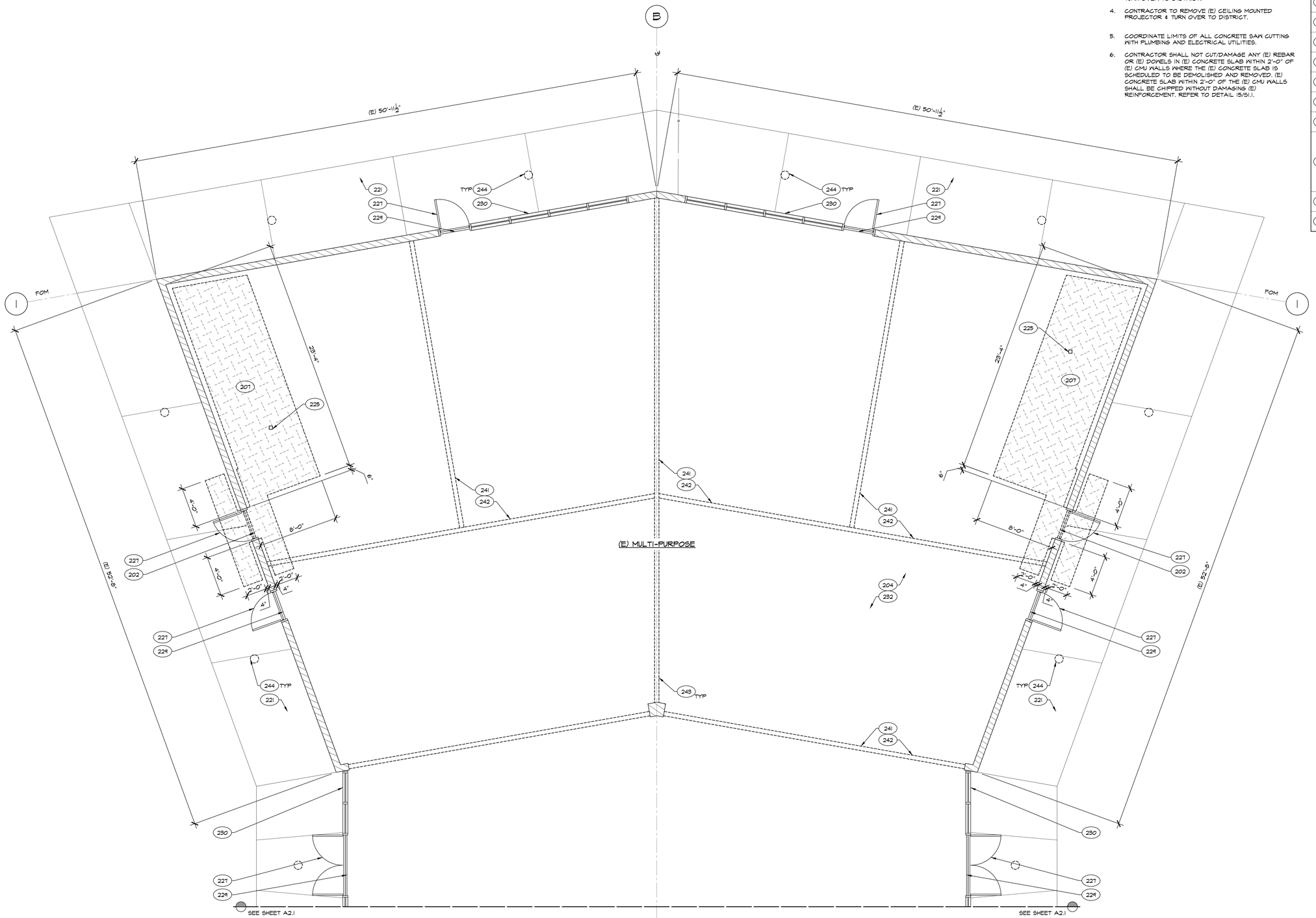

TRUE NORTH

PLAN NORTH

(A) PARTIAL DEMO FLOOR PLAN - UNIT 1000

NORTH

SCALE : 1/4" = 1'-0"

IDENTIFICATION STAMP
DIV. OF THE STATE ARCHITECT
APP: 03-122528 INC:
REVIEWED FOR
SS ☑ FLS ☑ ACS ☑
DATE: 01/06/2025

PTN : 63529-385 FILE: 15-H3

HIGHLAND HIGH SCHOOL
CAFETERIA REHABILITATION AND MODERNIZATION
2900 ROYAL SCOTS WAY
FOR
KERN HIGH SCHOOL DISTRICT
BAKERSFIELD, KERN COUNTY, CALIFORNIA

SCARCHITECT inc.
1601 NEW STINE ROAD, SUITE 280
BAKERSFIELD, CA 93309
PH: (661) 397-4377
FAX: (661) 397-4378
WWW.SCARCHITECT.COM

LICENSED ARCHITECT
STEPHEN J. CORBIN
No. C-16758
Exp. 11/30/25
STATE OF CALIFORNIA

STEPHEN J. CORBIN, NCARB, AIA, LEED ®-AP

CHECK AND VERIFY ALL DIMENSIONS BEFORE PROCEEDING WITH THE WORK. REPORT DISCREPANCIES TO THE ARCHITECT. ALL CONSTRUCTION SHALL CONFORM TO THE C.B.C.

KERN HIGH SCHOOL DISTRICT
Tradition of Excellence
Est. 1893

PARTIAL DEMO FLOOR PLAN - UNIT 1000

MARK	DATE	REVISIONS
1		
2		
3		

JOB NO. 1319
DRAWN : ED, FJS
CHECKED : BCW
DATE : 9/25/24

2.0
7 OF 99 SHEETS

WALL LEGEND:

- DEMO (E) 2x6 WOOD STUD WALL
- (E) 2x6 WOOD STUD WALL
- (E) 8" CMU WALL

LEGEND:

SAWCUT & DEMO (E) CONC SLAB / WALK AS REQ'D (4 / A10.4)

NOTES:

1. CONTRACTOR SHALL REMOVE, STORE, PROTECT (E) WALL SCONE LIGHT FIXTURE &TURN OVER TO DISTRICT.
2. CONTRACTOR SHALL STORE & PROTECT (E) SMART BOARDS & MARKER BOARDS SCHEDULED FOR REMOVAL & TURN OVER TO DISTRICT.
3. CONTRACTOR TO REMOVE (E) PROJECTION SCREEN & TURN OVER TO DISTRICT.
4. CONTRACTOR TO REMOVE (E) CEILING MOUNTED PROJECTOR & TURN OVER TO DISTRICT.
5. COORDINATE LIMITS OF ALL CONCRETE SAW CUTTING WITH PLUMBING AND ELECTRICAL UTILITIES.
6. CONTRACTOR SHALL NOT CUT/DAMAGE ANY (E) REBAR OR (E) DOWELS IN (E) CONCRETE SLAB WITHIN 2'-0" OF (E) CMU WALLS WHERE THE (E) CONCRETE SLAB IS SCHEDULED TO BE DEMOLISHED AND REMOVED. (E) CONCRETE SLAB WITHIN 2'-0" OF THE (E) CMU WALLS SHALL BE CHIPPED WITHOUT DAMAGING (E) REINFORCEMENT. REFER TO DETAIL 15/S1.1.

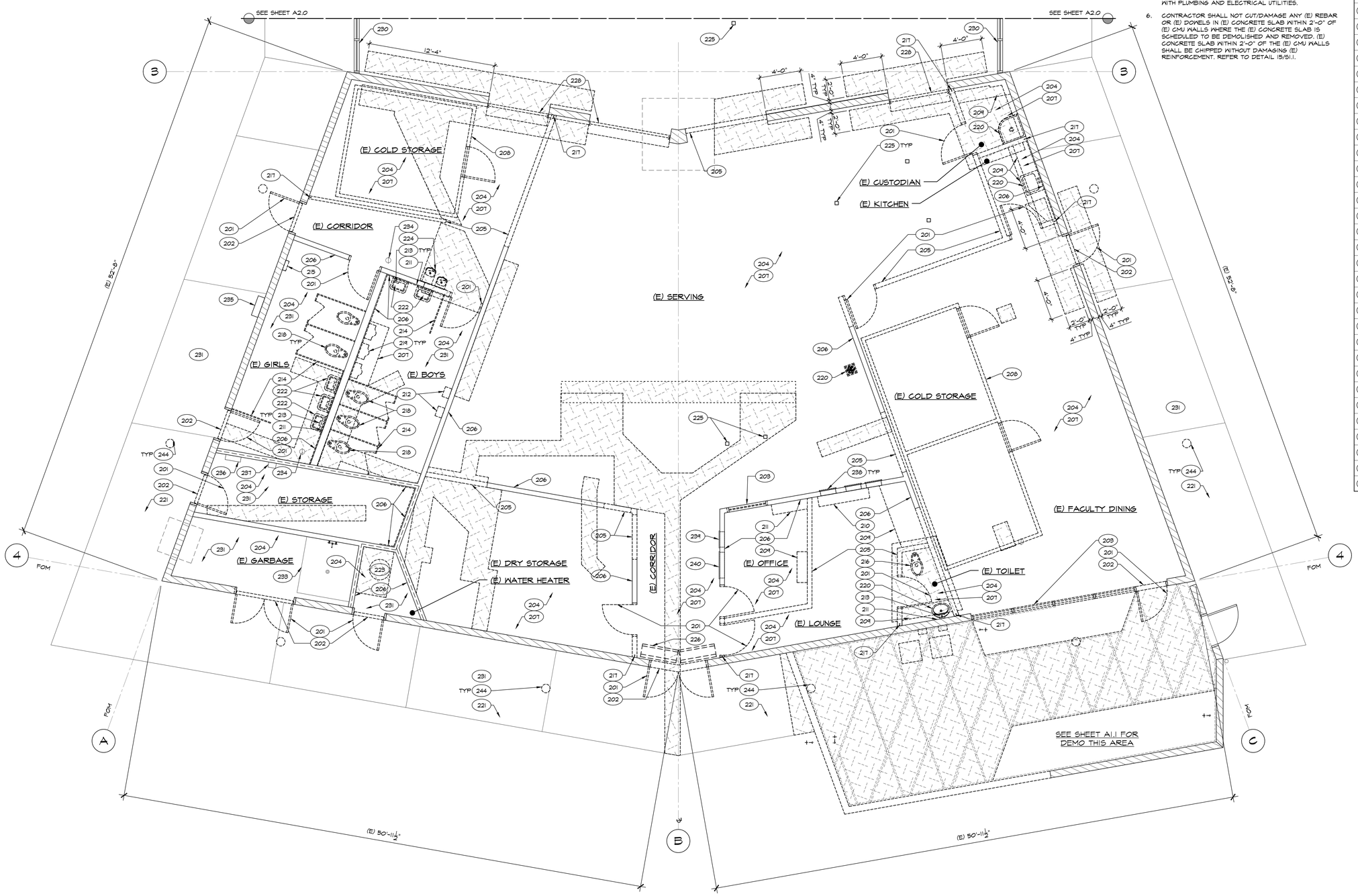

KEYNOTES

201	DEMO (E) DOOR, FRAME & HARDWARE
202	DEMO (E) TRESHOLD
203	DEMO (E) WINDOW/STOREFRONT AS REQ'D
204	DEMO (E) SUSPENDED ACOUSTIC/ PLASTER CEILING
205	DEMO (E) 2x STUD WALL & FINISH, CUT (E) AB'S, FLUSH W/ (E) CONC SLAB AS REQ'D
206	DEMO (E) WALL FINISH AS REQ'D
207	DEMO (E) FLOOR FINISH AS REQ'D PREP FOR FLOORING - SEE SCHEDULE
208	SALVAGE WALK-IN COLD BOX & FREEZER. COORDINATE W/ DISTRICT.
209	DEMO (E) CABINETS
210	SALVAGE (E) LOCKERS & RETURN TO DISTRICT
211	DEMO (E) SHELF/MIRROR
212	DEMO (E) PAPER TOWEL DISPENSER
213	DEMO (E) SOAP DISPENSER
214	DEMO (E) TOILET PARTITIONS/PRIVACY SCREEN PANEL
215	DEMO (E) FEMININE TOWEL DISPENSER
216	DEMO (E) TOILET - SEE PLUMBING PLAN
217	CUT (E) ANCHOR BOLTS FLUSH W/ (E) CMU WALL
218	SALVAGE (E) TOILET & RETURN TO DISTRICT - SEE PLUMBING PLAN
219	DEMO (E) URINAL - SEE PLUMBING PLAN
220	DEMO (E) LAVATORY/SINK/FLOOR SINK - SEE PLUMBING PLAN
221	DEMO (E) SUSPENDED CEMENT PLASTER SOFFIT & (E) SOFFIT FRAMING AS REQ'D
222	SALVAGE (E) LAVATORY & RETURN TO DISTRICT - SEE PLUMBING PLAN
223	DEMO (E) WATER HEATER - SEE PLUMBING PLAN
224	DEMO (E) DRINKING FOUNTAIN - SEE PLUMBING PLAN
225	DEMO (E) POWER COLUMN - SEE ELECTRICAL PLAN
226	DEMO (E) AIR CURTAIN
228	DEMO (E) ROLL-UP DOOR
230	(E) STOREFRONT SYSTEM TO REMAIN
231	(E) CONC SLAB/WALK TO REMAIN
233	(E) LAVATORY/SINK/FLOOR SINK TO REMAIN
234	(E) FLOOR CLEANOUT TO REMAIN - SEE PLUMBING PLAN
235	(E) FIRE HOSE CABINET TO REMAIN
236	(E) HVAC SELECTOR PANEL TO REMAIN
237	(E) HVAC TIME CLOCK & TIMER TO REMAIN - SEE MECHANICAL PLAN
238	DEMO (E) ELECTRICAL PANEL - SEE ELECTRICAL PLAN
239	(E) SIGNAL TERMINAL CABINET TO REMAIN - SEE ELECTRICAL PLAN
240	(E) PUBLIC TELEPHONE TERMINAL CABINET TO REMAIN
244	DEMO (E) LIGHT FIXTURE ABOVE

IDENTIFICATION STAMP
DIV. OF THE STATE ARCHITECT
APP: 03-122528 INC:
REVIEWED FOR
SS ☑ FLS ☑ ACS ☑
DATE: 01/06/2025

PTN : 63529-385 FILE: 15-H3

HIGHLAND HIGH SCHOOL
CAFETERIA REHABILITATION AND MODERNIZATION
2900 ROYAL SCOTS WAY
FOR
KERN HIGH SCHOOL DISTRICT
BAKERSFIELD, KERN COUNTY, CALIFORNIA

ARCHITECT inc.
1601 NEW STINE ROAD, SUITE 280
BAKERSFIELD, CA 93309
PH: (661) 397-4377
FAX: (661) 397-4378
WWW.SCARCHITECT.COM

LICENSED ARCHITECT STEPHEN J. CORBIN No. C-16728 Exp. 12/31/24 STATE OF CALIFORNIA

STEPHEN J. CORBIN, NCARB, AIA, LEED ®-AP

CHECK AND VERIFY ALL DIMENSIONS BEFORE PROCEEDING WITH THE WORK. REPORT DISCREPANCIES TO THE ARCHITECT. ALL CONSTRUCTION SHALL CONFORM TO THE C.B.C.

KERN HIGH SCHOOL DISTRICT — Tradition of Excellence — Est. 1893

PARTIAL DEMO FLOOR PLAN - UNIT 1000

MARK	DATE	REVISIONS
1		
2		
3		

JOB NO. 1319
DRAWN : ED, FJS
CHECKED : BCW
DATE : 9/25/24

2.1
8 OF 99 SHEETS

TRUE NORTH
PLAN NORTH

(A) PARTIAL DEMO FLOOR PLAN - UNIT 1000
SOUTH

SCALE : 1/4" = 1'-0"

BUILDING OCCUPANT LOAD & ACCESSIBLE EGRESS

OCCUPANT LOAD PER ROOM / EXIT ANALYSIS PER ROOM

BUILDING	ROOM #	DESCRIPTION	FLOOR AREA SQ. FT.	SF/OCC LOAD PER CBC 2022, TABLE 1004.1.2: OCC FACTOR	SF/OCC LOAD PER CBC 2022, TABLE 1004.1.2: MAXIMUM OCCUPANTS		MINIMUM REQUIRED EGRESS WIDTH PER CBC 2022, SEC 1005.1: OCC X 0.2	MINIMUM REQUIRED EGRESS WIDTH PER CBC 2022, SEC 1005.1: OCC X 0.3 AT STAIRWAYS	MINIMUM REQUIRED EGRESS WIDTH PER CBC 2022, SEC 1005.1: EGRESS WIDTH (IN") PROVIDED	MINIMUM REQUIRED EXIT PER CBC 2022 1015.1: OCC ≤ 49 (1) EXIT REQ'D	MINIMUM REQUIRED EXIT PER CBC 2022 1015.1: NO. OF EXITS PROVIDED
(E) UNIT 1000	1001	DINING	5,720	15 NET	381	422 TOTAL	76.2	-	364	8	8
	1002	KITCHEN/SERVING	2,059	200	10		2	-	36	1	1
	1003	CORRIDOR	91	-	-		-	-	-	-	-
	1004	GIRLS	206	-	-		-	-	-	-	-
	1005	BOYS	254	-	-		-	-	-	-	-
	1006	ELECTRICAL	144	300 GROSS	1		0.2	-	36	1	1
	1007	CAN-WASH/JANITOR	124	300 GROSS	1		0.2	-	68	1	1
	1008	MECHANICAL	43	300 GROSS	1		0.2	-	36	1	1
	1009	TOILET	104	-	-		-	-	-	-	-
	1010	BREAK/LOCKERS	63	-	-		-	-	-	-	-
	1011	OFFICE	87	15 NET	6		1.2	-	36	1	1
	1012	CORRIDOR	77	-	-		-	-	-	-	-
	1013	RECEIVING	126	-	-		-	-	-	-	-
	1014	DRY STORAGE	387	300 GROSS	1		0.2	-	36	1	1
	1015	DRY STORAGE	127	300 GROSS	1		0.2	-	72	1	1
	1016	FACULTY LOUNGE	293	15 NET	20		4	-	36	1	1
	1017	WALK-IN COOLER	293	-	-		-	-	-	-	-
	1018	WALK-IN FREEZER	277	-	-		-	-	-	-	-

EGRESS PER BLDG EXIT

DOOR NO.	ROOMS LOADED ON DOOR	TOTAL OCC	OCC X 0.2	EGRESS WIDTH (IN") PROVIDED
1001A	1001 (1/8)	47.625	9.525	72
1001B	1001 (1/8)	47.625	9.525	37
1001C	1001 (1/8)	47.625	9.525	37
1001D	1001 (1/8)	47.625	9.525	36
1001E	1001 (1/8)	47.625	9.525	36
1001F	1001 (1/8)	47.625	9.525	37
1001G	1001 (1/8)	47.625	9.525	37
1001H	1001 (1/8)	47.625	9.525	72
1002E	1002	10	2	36
1006A	1006	1	0.2	36
1007A	1007	1	0.2	68
1008A	1008	1	0.2	36
1013A	1011, 1014	7	1.4	68
1015A	1015	1	0.2	72
1016B	1016	20	4	36
	TOTAL	422	84.4	716
BLDG TOTAL	MINIMUM REQUIRED EXIT PER CBC 2022 1015.1, 1015.2.1	2		
	NUMBER OF EXITS PROVDIED	15		

EXIT LEGEND: 103 (5) — ROOM # / # OF OCCUPANTS

NOTES:

1. COORDINATE LIMITS OF ALL CONCRETE SLAB INFILL WITH PLUMBING AND ELECTRICAL UTILITIES.

LEGEND:

CONC SLAB IN-FILL - SEE STRUCT'L (12/S1.1) (15/S1.1)

– PATH OF EGRESS

WALL LEGEND:

(E) 2x6 WOOD STUD WALL

(E) 8" CMU WALL

2x6 WOOD STUD @ 16" OC, NON-BEARING, T & B CONNECTIONS (9/A10.2) (16/A10.2)

2x6 WOOD STUD @ 16" OC, NON-BEARING W/ INSUL PER SPEC, T & B CONNECTIONS (9/A10.2) (15/A10.2)

2x6 WOOD STUD @ 16" OC, NON-BEARING W/ INSUL PER SPEC, T & B CONNECTIONS (30/A10.2)

WALK-IN FREEZER / COOLER PER MFR

8" CMU WALL IN-FILL (25/A10.1)

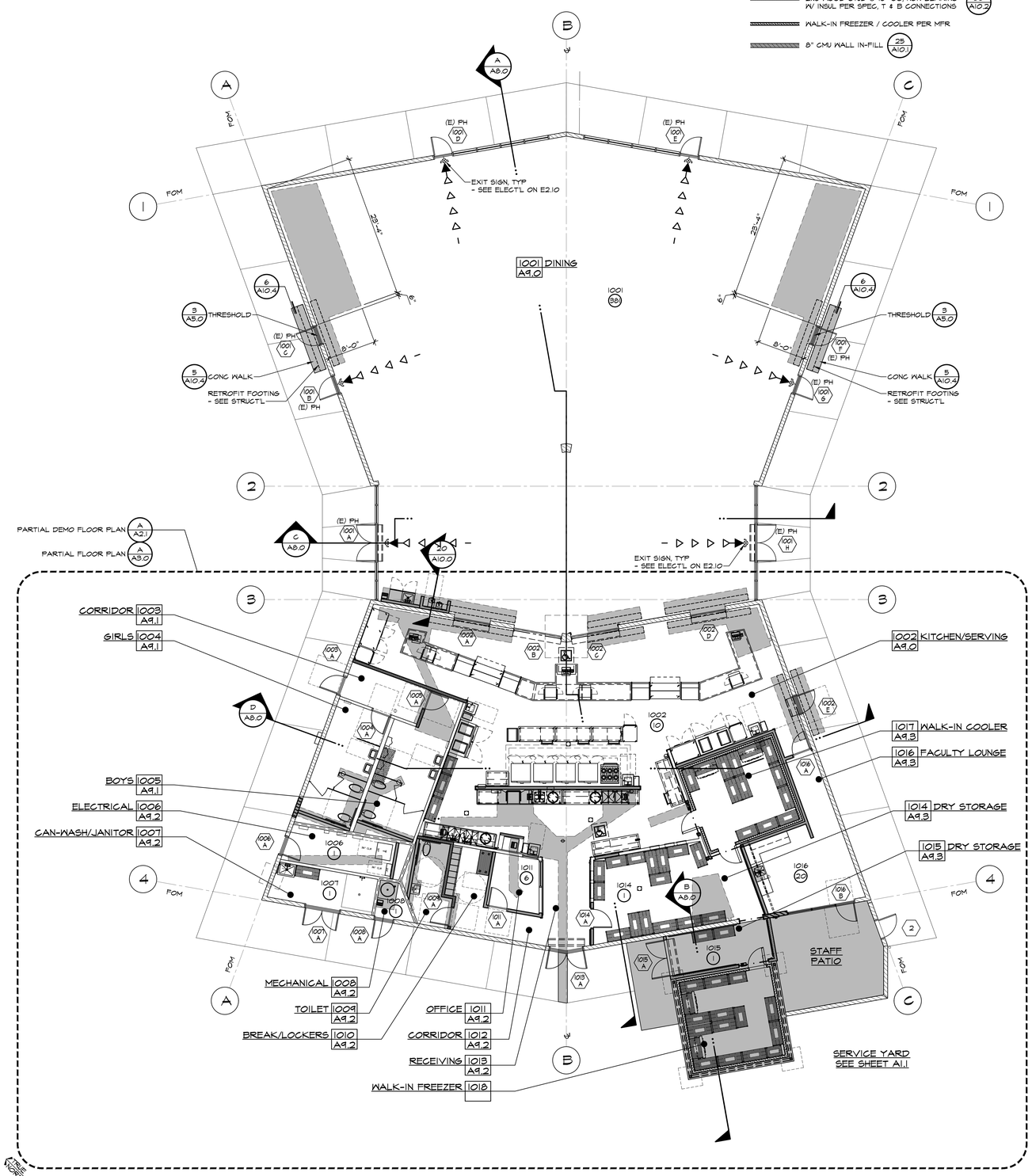

(A) FLOOR PLAN - UNIT 1000

CAFETERIA

SCALE : 1/8" = 1'-0"

IDENTIFICATION STAMP
DIV. OF THE STATE ARCHITECT
APP: 03-122528 INC:
REVIEWED FOR
SS ☑ FLS ☑ ACS ☑
DATE: 01/06/2025

PTN : 63529-385 FILE: 15-H3

HIGHLAND HIGH SCHOOL
CAFETERIA REHABILITATION AND MODERNIZATION
2900 ROYAL SCOTS WAY
FOR
KERN HIGH SCHOOL DISTRICT
BAKERSFIELD, KERN COUNTY, CALIFORNIA

ARCHITECT SCA inc.
1601 NEW STINE ROAD, SUITE 280
BAKERSFIELD, CA 93309
PH: (661) 397-4377
FAX: (661) 397-4378
WWW.SCARCHITECT.COM

STEPHEN J. CORBIN, NCARB, AIA, LEED ®-AP

CHECK AND VERIFY ALL DIMENSIONS BEFORE PROCEEDING WITH THE WORK. REPORT DISCREPANCIES TO THE ARCHITECT. ALL CONSTRUCTION SHALL CONFORM TO THE C.B.C.

KERN HIGH SCHOOL DISTRICT — Tradition of Excellence — Est. 1893

FLOOR PLAN - UNIT 1000

MARK	DATE	REVISIONS
1		
2		
3		

JOB NO. 1319
DRAWN : ED, FJS
CHECKED : BCW
DATE : 9/25/24

2.2
9 OF 99 SHEETS

NOTES:

1. COORDINATE LIMITS OF ALL CONCRETE SLAB INFILL WITH PLUMBING AND ELECTRICAL UTILITIES.

KEYNOTES

301	(E) DOOR, FRAME & HARDWARE	
303	(E) THRESHOLD	
304	(E) STOREFRONT SYSTEM	
305	REINSTALL (E) TOILET - SEE PLUMBING PLAN	
306	(E) LAVATORY/SINK/FLOOR SINK	
307	REINSTALL (E) LAVATORY - SEE PLUMBING PLAN	
308	(E) FLOOR CLEANOUT - SEE PLUMBING PLAN	
309	(E) FIRE HOSE CABINET	
310	(E) HVAC SELECTOR PANEL	
311	(E) HVAC TIME CLOCK & TIMER	
312	(E) SIGNAL TERMINAL CABINET - SEE ELECTRICAL PLAN	
313	(E) PUBLIC TELEPHONE TERMINAL CABINET	
314	DOOR PER SCHEDULE	- A5.0
315	OVERHEAD ROLLING GRILLE PER SCHEDULE & SPECIFICATIONS	14 A10.2
316	THRESHOLD	9 A5.0
317	REDUCER STRIP	4 A5.0
318	WINDOW PER SCHEDULE	- A5.0
319	WALL IN-FILL	11 A10.1
322	IN-FILL (E) CONC SLAB DEPRESSION W/ ARDEX UP TO FF LEVEL	10 A10.0
323	HAND DRYER - SEE SPEC	1 A10.0 / 12 A10.0
324	SOLID PLASTIC PARTITIONS PER SPEC	7 A10.0
325	GRAB BAR - SEE SPEC	1 A10.0 / 6 A10.0 / 11 A10.0
326	RECESSED TOILET PAPER DISPENSER PER SPEC	10 A10.0
327	TOILET FIXTURE - SEE PLUMBING PLAN	1 A10.0 / 6 A10.0
328	URINAL & REQUIREMENTS - SEE PLUMBING PLAN	1 A10.0 / 8 A10.0
329	LAVATORY/SINK & REQUIREMENTS - SEE PLUMBING PLAN PROVIDE & INSTALL INSULATE WRAPS @ ALL "P" TRAPS - SEE MECHANICAL	5 A10.0
331	FLOOR SINK - SEE PLUMBING PLAN	
332	FLOOR DRAIN - SEE PLUMBING PLAN	
333	WATER HEATER - SEE PLUMBING PLAN	
334	DRINKING FOUNTAIN - SEE PLUMBING PLAN	13 A10.0
335	CLEANOUT - SEE PLUMBING PLAN	
336	ALUMINUM STOREFRONT SYSTEM	1 A10.2 / 7 A10.2 / 13 A10.2
337	KNEE SPACE REQUIREMENTS	4 A10.0
338	PLAM BASE CABS AND/OR UPPER CABS	11 A10.2
339	SOLID SURFACE COUNTERTOP AND SPLASH	
342	LOCKERS ON 6" CONC BASE - SEE SPECS	24 A10.0
343	ADA BENCH	16 A10.0
345	ELECTRICAL PANEL - SEE ELECTRICAL PLAN	
346	AIR CURTAIN - SEE FOODSERVICE PLAN	
348	CORNER GUARD - SEE FOODSERVICE PLAN	
349	WALL GUARD - SEE FOODSERVICE PLAN	
350	MOP HOLDER - SEE FOODSERVICE PLAN	
351	SHELVING UNIT - SEE FOODSERVICE PLAN	
352	KITCHEN EQUIPMENT - SEE FOODSERVICE PLAN	
353	X-FMR - SEE ELECTRICAL PLAN	
354	FIRE ALARM CONTROL PANEL - SEE ELECTRICAL PLAN	
355	VOICE EVAC - SEE ELECTRICAL PLAN	
356	SPREAD FOOTING - SEE STRUCTURAL PLAN	

WALL LEGEND:

- (E) 2x6 WOOD STUD WALL THAT EXTEND TO ROOF DECK
- (E) 2x6 WOOD STUD WALL
- (E) 8" CMU WALL
- 2x6 WOOD STUD @ 16" OC, NON-BEARING , T & B CONNECTIONS (9 A10.2) (16 A10.2)
- INT 2x6 WOOD STUD @ 16" OC, NON-BEARING W/ INSUL PER SPEC, T & B CONNECTIONS (9 A10.2) (15 A10.2)
- EXT 2x6 WOOD STUD @ 16" OC, NON-BEARING W/ INSUL PER SPEC, T & B CONNECTIONS AND (1) HR RATED ASSEMBLY (30 A10.2) (24 A10.1)
- WALK-IN FREEZER / COOLER PER MFR
- 8" CMU WALL IN-FILL (25 A10.1)

LEGEND:

- CONC SLAB IN-FILL - SEE STRUCT'L
- WINDOW TAG - SEE WINDOW SCHEDULE ON SHEET A5.0
- ELEVATION MARK - SEE INTERIOR ELEVATIONS
- SIGNAGE (5 A5.0) (6 A10.2)

ADA REQ'D MIN CLEARANCES

1	30" X 48"
2	48" X 48"
3	48" X 54"
4	48" X 60"
5	54" X 60"
6	60" X 60"
7	60" X 72"
8	60" DIA

(A) PARTIAL FLOOR PLAN - UNIT 1000

SCALE : 1/4" = 1'-0"

IDENTIFICATION STAMP
DIV. OF THE STATE ARCHITECT
APP: 03-122528 INC:
REVIEWED FOR
SS ☑ FLS ☑ ACS ☑
DATE: 01/06/2025

PTN : 63529-385 FILE: 15-H3

HIGHLAND HIGH SCHOOL

CAFETERIA REHABILITATION AND MODERNIZATION

2900 ROYAL SCOTS WAY
FOR
KERN HIGH SCHOOL DISTRICT
BAKERSFIELD, KERN COUNTY, CALIFORNIA

ARCHITECT S inc.
1601 NEW STINE ROAD, SUITE 280
BAKERSFIELD, CA 93309
PH: (661) 397-4377
FAX: (661) 397-4378
WWW.SCARCHITECT.COM

LICENSED ARCHITECT STEPHEN J. CORBIN No. 016785 12/31/25 STATE OF CALIFORNIA

STEPHEN J. CORBIN, NCARB, AIA, LEED ®-AP

CHECK AND VERIFY ALL DIMENSIONS BEFORE PROCEEDING WITH THE WORK. REPORT DISCREPANCIES TO THE ARCHITECT. ALL CONSTRUCTION SHALL CONFORM TO THE C.B.C.

KERN HIGH SCHOOL DISTRICT — Tradition of Excellence — Est. 1893

PARTIAL FLOOR PLAN - UNIT 1000

MARK	DATE	REVISIONS
1		
2		
3		

JOB NO. 1319
DRAWN : ED, FJS
CHECKED : BCW
DATE : 9/25/24

3.0

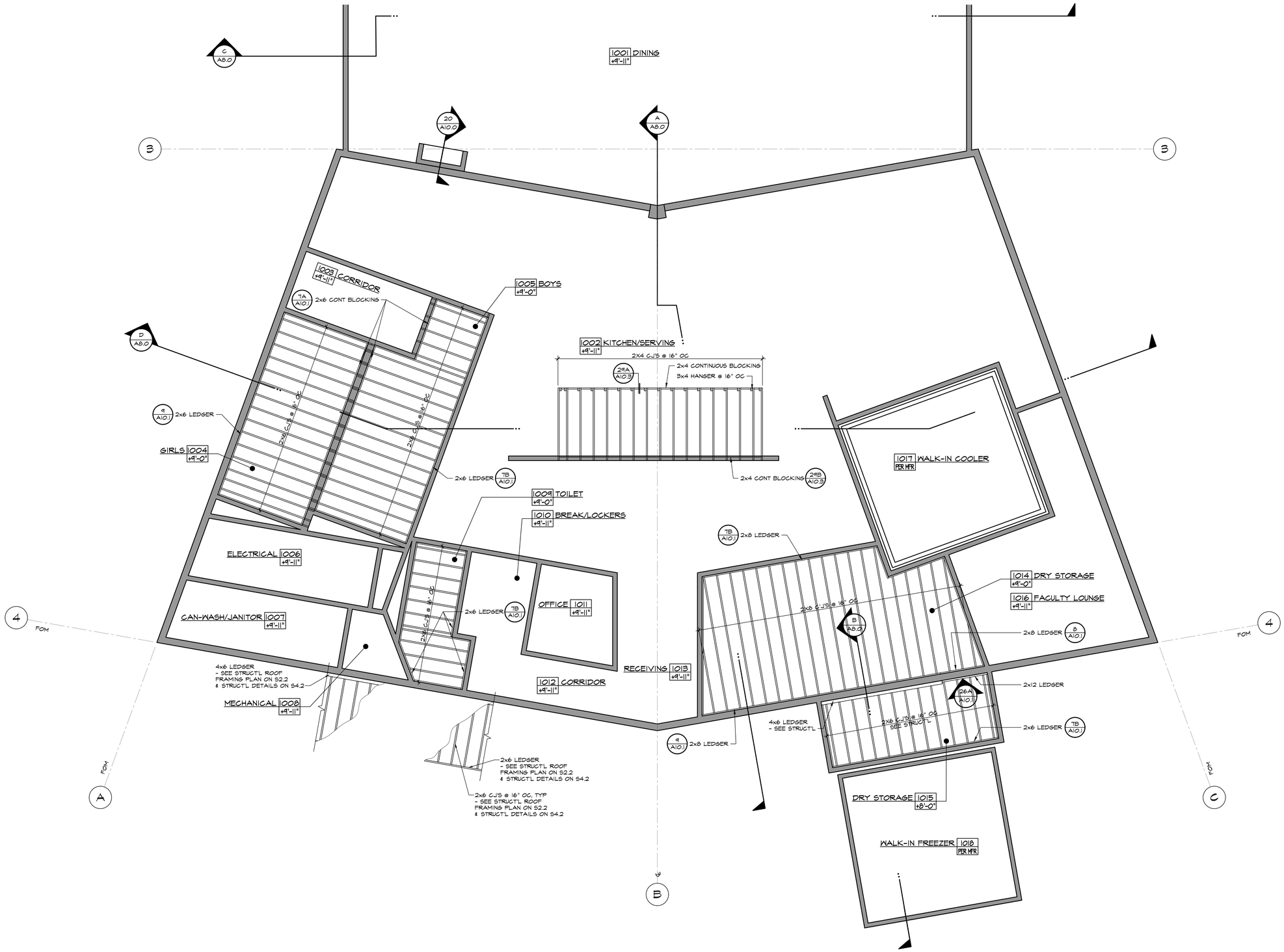

(A) PARTIAL CEILING JOIST PLAN - UNIT 1000

SCALE : 1/4" = 1'-0"

IDENTIFICATION STAMP
DIV. OF THE STATE ARCHITECT
APP: 03-122528 INC:
REVIEWED FOR
SS ☑ FLS ☑ ACS ☑
DATE: 01/06/2025

PTN : 63529-385 FILE: 15-H3

HIGHLAND HIGH SCHOOL

CAFETERIA REHABILITATION AND MODERNIZATION
2900 ROYAL SCOTS WAY
FOR
KERN HIGH SCHOOL DISTRICT
BAKERSFIELD, KERN COUNTY, CALIFORNIA

ARCHITECT SCI inc.
1601 NEW STINE ROAD, SUITE 280
BAKERSFIELD, CA 93309
PH: (661) 397-4377
FAX: (661) 397-4378
WWW.SCARCHITECT.COM

LICENSED ARCHITECT
STEPHEN J. CORBIN
No. C-16786
EXP. 12/31/25
STATE OF CALIFORNIA

STEPHEN J. CORBIN, NCARB, AIA, LEED ®-AP

CHECK AND VERIFY ALL DIMENSIONS BEFORE PROCEEDING WITH THE WORK. REPORT DISCREPANCIES TO THE ARCHITECT. ALL CONSTRUCTION SHALL CONFORM TO THE C.B.C.

KERN HIGH SCHOOL DISTRICT
Tradition of Excellence
Est. 1893

PARTIAL CEILING JOIST PLAN

MARK	DATE	REVISIONS
1		
2		
3		

JOB NO. 1319
DRAWN : FJS
CHECKED : BCW
DATE : 9/25/24

3.1
11 OF 99 SHEETS

REFLECTED CEILING LEGEND

- DASHED LINE INDICATES CEILING GRID IS NOT ATTACHED TO WALL. FREE END. REFER TO REFLECTED CEILING PLAN FOR LOCATIONS.
- TYPICAL 12 GA. HANGER WIRES AT ALL CORNERS OF LIGHT FIXTURES AND AIR TERMINALS. SEE ELECT'L
- MAIN RUNNERS AT 4'-0" OC - TYP
- CROSS RUNNERS AT 2'-0" OC - TYP
- ATTACH CEILING GRID TO TWO ADJACENT WALLS WHERE NO DASHED LINES ARE SHOWN ON REFLECTED CEILING PLAN. FIXED END.
- TYPICAL 12 GA. HANGERS 8" FROM WALLS 4'-0" OC THEREAFTER ATTACHED TO STRUCTURE.
- SPLAY WIRES AND COMPRESSION STRUTS PER DETAIL. SEE REFLECTED CEILING PLAN FOR LOCATIONS.
- 24" X 48" SUSPENDED ACOUSTICAL CEILING SYSTEM SEE DETAILS 4/A10.3, 5/A10.3, 6/A10.3, 9/A10.3, 17/A10.3, 1/A10.4, 19/A10.4, 25/A10.4

CEILING REGISTERS - SEE MECHANICAL PLANS

1'-0" x 4'-0" RECESSED MTD. LIGHT FIXTURE SEE ELECTRICAL PLANS

2'-0" x 2'-0" RECESSED LIGHT FIXTURE SEE ELECTRICAL PLANS

2'-0" x 4'-0" RECESSED MTD. LIGHT FIXTURE SEE ELECTRICAL PLANS

DEMO (E) FIRE SPRINKLER SEE PLUMBING PLANS

(E) POWER COLUMN TO REMAIN SEE ELECTRICAL PLANS

FIRE SPRINKLERS PER FIRE SPRINKLER PLAN

LIGHT FIXTURE SEE ELECTRICAL PLANS 1/E1.20

CEILING FINISH - SEE FINISH SCHEDULE

ACCESS PANEL COORDINATE LOCATION WITH HEAT DETECTOR AS SHOWN ON ELECTRICAL 2/A10.3

SUSPENDED CEILING NOTES (ACOUSTICAL)

1. CEILING SYSTEM GENERAL NOTES
1.01 CEILING SYSTEM COMPONENTS SHALL COMPLY WITH ASTM C635 AND SECTION 51 OF ASTM E580.
1.02 THE CEILING GRID SYSTEM MUST BE RATED HEAVY DUTY AS DEFINED BY ASTM C635.
1.03 CEILING SYSTEMS. THE FOLLOWING CEILING SYSTEM(S) IS/ARE PART OF THE SCOPE OF THIS PROJECT:
MANUFACTURER: (ARMSTRONG SUSPENDED CEILING SYSTEM OR APPROVED EQUAL)
PRODUCT NAME: PRELUDE XL 15/16" WITH OPTIMA HEALTH ZONE CEILING TILES
CLASSIFICATION OF CEILING GRID IS HEAVY-DUTY
EVALUATION REPORT TYPE AND NUMBER: ICC # ESR-1308
MAIN RUNNER PART, MODEL, OR CATALOG NUMBER: #7301
CROSS RUNNER PART, MODEL, CATALOG NUMBER: #XL 7341
2 FOOT CROSS-T #XL 7341
1.04 SEISMIC WALL CLIP.
MANUFACTURER'S MODEL: ARMSTRONG #BERK2
1.05 CEILING PANELS SHALL NOT SUPPORT ANY LUMINAIRES, AIR TERMINALS OR DEVICES.
1.06 FOR ACOUSTICAL TILE PANELS OF ANY MATERIAL OTHER THAN MINERAL OR GLASS FIBER, A ¼" CLEARANCE SHALL BE PROVIDED BETWEEN THE PANEL AND THE WALL ON THE SIDES OF THE CEILING FREE TO SLIP. CLEARANCE BETWEEN CEILING GRID RUNNERS AND WALLS SHALL COMPLY WITH THE DETAILS ON THESE DRAWINGS REGARDLESS OF CEILING TILE MATERIAL.
2. MATERIALS
2.01 CEILING WIRE SHALL BE CLASS 1 ZINC COATED (GALVANIZED) CARBON STEEL CONFORMING TO ASTM A641. WIRE SHALL BE #12 GAUGE (0.106" DIAMETER) WITH SOFT TEMPER AND MINIMUM ULTIMATE TENSILE STRENGTH = 70 KSI.
2.02 GALVANIZED SHEET STEEL (INCLUDING THAT USED FOR METAL STUD AND TRACK COMPRESSION STRUTS/POST) SHALL CONFORM TO ASTM A653, OR OTHER EQUIVALENT SHEET STEEL LISTED IN SECTION A3.1 OF THE NORTH AMERICAN SPECIFICATION FOR THE DESIGN OF COLD-FORMED STEEL STRUCTURAL MEMBERS, (AISI S100). MATERIAL 43 MIL (18 GAUGE) AND LIGHTER SHALL HAVE MINIMUM YIELD STRENGTH OF 33 KSI. MATERIAL 54 MIL (16 GAUGE) AND HEAVIER SHALL HAVE A MINIMUM YIELD STRENGTH OF 50KSI.
2.03 ELECTRICAL METALLIC TUBE (EMT) SHALL BE ANSI C80.3/UL 797 CARBON STEEL WITH G40 GALVANIZING. EMT SHALL HAVE MINIMUM YIELD STRENGTH (FY) OF 30 KSI AND MINIMUM ULTIMATE STRENGTH (FU) OF 48 KSI.
3. ATTACHMENT OF HANGER AND BRACING WIRES
3.01 SEPARATE ALL CEILING HANGER AND BRACING WIRES AT LEAST 6 INCHES FROM ALL UNBRACED DUCTS, PIPES, CONDUIT, ETC.
3.02 HANGER AND BRACING WIRES SHALL NOT ATTACH TO OR BEND AROUND OBSTRUCTIONS INCLUDING BUT NOT LIMITED TO PIPING, DUCTWORK, CONDUIT AND EQUIPMENT.
3.03 HANGER WIRES THAT ARE MORE THAN ONE (HORIZONTAL) IN SIX (VERTICAL) OUT OF PLUMB SHALL HAVE COUNTER-SLOPING WIRES.
3.04 SLACK SAFETY WIRES SHALL BE CONSIDERED HANGER WIRES FOR INSTALLATION AND TESTING REQUIREMENTS.
3.05 HANGER AND BRACING WIRE ANCHORAGE TO THE STRUCTURE SHALL BE INSTALLED SUCH THAT THE DIRECTION OF THE ANCHORAGE ALIGNS WITH THE DIRECTION OF THE WIRE. BRACING WIRE CEILING CLIPS SHALL BE BENT AS SHOWN IN THE DETAILS AND ROTATED AS REQUIRED TO ALIGN WITH THE DIRECTION OF THE WIRE. SCREWS IN WOOD SHALL BE INSTALLED TO ALIGN WITH THE DIRECTION OF THE WIRE.
4. FASTENERS AND WELDING
4.01 SHEET METAL SCREWS SHALL COMPLY WITH ASTM C1513 AND ASME B18.6.3. PENETRATION OF SCREWS THROUGH JOINED MATERIAL SHALL NOT BE LESS THAN THREE EXPOSED THREADS.
4.02 EXPANSION ANCHORS SHALL BE: HILTI KB TZ2 (ICC ESR-4266).
4.03 POWER-ACTUATED FASTENERS SHALL BE: HILTI X-U (ICC ESR-2269).
4.04 IF NOT OTHERWISE SPECIFIED IN THE EVALUATION REPORT, POWER-ACTUATED FASTENERS INSTALLED IN STEEL SHALL BE INSTALLED SO THE ENTIRE POINTED END OF THE FASTENER IS DRIVEN THROUGH THE STEEL MEMBER
4.05 POWER-ACTUATED FASTENERS IN CONCRETE OR MASONRY ARE NOT PERMITTED FOR BRACING WIRES.
4.06 CONCRETE REINFORCEMENT AND PRESTRESSING TENDONS SHALL BE LOCATED BY NON-DESTRUCTIVE MEANS PRIOR TO INSTALLING POST-INSTALLED ANCHORS.
4.07 WELDING SHALL BE IN ACCORDANCE WITH AWS D1.3 USING E6010X SERIES ELECTRODES.
5. TESTING
5.01 ALL FIELD TESTING MUST BE PERFORMED IN THE PRESENCE OF THE PROJECT INSPECTOR.
5.02 POST-INSTALLED ANCHORS IN CONCRETE USED TO SUPPORT HANGER WIRES SHALL BE TESTED AT A FREQUENCY OF 10 PERCENT. POWER-ACTUATED FASTENERS IN CONCRETE SHALL BE FIELD TESTED FOR 200 POUNDS IN TENSION. ALL OTHER POST-INSTALLED ANCHORS IN CONCRETE SHALL BE TESTED IN ACCORDANCE WITH CBC SECTION 1910A.3.
5.03 POST-INSTALLED ANCHORS IN CONCRETE USED TO ATTACH BRACING WIRES SHALL BE TESTED AT A FREQUENCY OF 50 PERCENT IN ACCORDANCE WITH CBC SECTION 1910A.3.
6. LUMINAIRES
6.01 ALL LUMINAIRES SHALL BE POSITIVELY ATTACHED TO THE CEILING SUSPENSION SYSTEMS BY MECHANICAL MEANS TO RESIST A HORIZONTAL FORCE EQUAL TO THE WEIGHT OF THE LUMINAIRE. A MINIMUM OF TWO SCREWS OR APPROVED FASTENERS ARE REQUIRED AT EACH LUMINAIRE, PER ASTM E580 SECTION 5.3.1.
6.02 SURFACE-MOUNTED LUMINAIRES SHALL BE ATTACHED TO THE MAIN RUNNER WITH AT LEAST TWO POSITIVE CLAMPING DEVICES. THE CLAMPING DEVICE SHALL COMPLETELY SURROUND THE SUPPORTING CEILING RUNNER AND BE MADE OF STEEL WITH A MINIMUM THICKNESS OF #14 GAUGE. ROTATIONAL SPRING CATCHES ARE NOT PERMITTED. A #12 GAUGE SLACK SAFETY WIRE SHALL BE CONNECTED FROM EACH CLAMPING DEVICE TO THE STRUCTURE ABOVE. ADDITIONAL SUPPORTS SHALL BE PROVIDED WHEN A LUMINAIRE IS 6 FEET OR LONGER OR EXCEEDS 56 POUNDS. MAXIMUM SPACING BETWEEN SUPPORTS SHALL NOT EXCEED 8 FEET.
6.03 LUMINAIRES WEIGHING LESS THAN OR EQUAL TO 10 POUNDS SUPPORTED DIRECTLY ON THE CEILING RUNNERS SHALL HAVE A MINIMUM OF ONE #12 GAUGE SLACK SAFETY WIRE CONNECTED FROM THE FIXTURE HOUSING TO THE STRUCTUREABOVE.
6.04 LUMINAIRES WEIGHING GREATER THAN 10 POUNDS BUT LESS THAN OR EQUAL TO 56 POUNDS SUPPORTED DIRECTLY ON THE CEILING RUNNERS SHALL HAVE A MINIMUM OF TWO #12 GAUGE SLACK SAFETY WIRES CONNECTED FROM THE FIXTURE HOUSING AT DIAGONAL CORNERS TO THE STRUCTURE ABOVE.
6.05 ALL LUMINAIRES WEIGHING GREATER THAN 56 POUNDS SHALL BE INDEPENDENTLY SUPPORTED FROM THE STRUCTURE ABOVE. SEE SUPPORT DETAILS ON THESE DRAWINGS FOR MORE INFORMATION.
7. SERVICES WITHIN THE CEILING
7.01 ALL FLEXIBLE SPRINKLER HOSE FITTING MOUNTING BRACKETS, CEILING-MOUNTED AIR TERMINALS OR OTHER SERVICES SHALL BE POSITIVELY ATTACHED TO THE CEILING SUSPENSION SYSTEMS BY MECHANICAL MEANS. SCREWS OR APPROVED FASTENERS ARE REQUIRED. A MINIMUM OF TWO ATTACHMENTS ARE REQUIRED AT EACH COMPONENT.
7.02 CEILING-MOUNTED SERVICES WEIGHING LESS THAN OR EQUAL TO 20 POUNDS SHALL HAVE ONE #12 GAUGE SLACK SAFETY WIRE ATTACHED FROM THE TERMINAL OR SERVICE TO THE STRUCTURE ABOVE.
7.03 CEILING-MOUNTED SERVICES WEIGHING MORE THAN 20 POUNDS BUT LESS THAN OR EQUAL TO 56 POUNDS SHALL HAVE TWO #12 GAUGE SLACK SAFETY WIRES (AT DIAGONAL CORNERS) CONNECTED FROM THE TERMINAL OR SERVICE TO THE STRUCTURE ABOVE.
7.04 CEILING-MOUNTED SERVICES WEIGHING MORE THAN 56 POUNDS SHALL BE INDEPENDENTLY SUPPORTED FROM THE STRUCTURE ABOVE. SEE SUPPORT DETAILS ON THESE DRAWINGS FOR MORE INFORMATION.
8. OTHER DEVICES WITHIN THE CEILING
8.01 ALL LIGHTWEIGHT MISCELLANEOUS DEVICES, SUCH AS STROBE LIGHTS, OCCUPANCY SENSORS, SPEAKERS, EXIT SIGNS, ETC., SHALL BE ATTACHED TO THE CEILING GRID. IN ADDITION, DEVICES WEIGHING MORE THAN 10 POUNDS SHALL HAVE A #12 GAUGE SLACK SAFETY WIRE ANCHORED TO THE STRUCTURE ABOVE. DEVICES WEIGHING MORE THAN 20 POUNDS SHALL BE SUPPORTED INDEPENDENTLY FROM THE STRUCTURE ABOVE.
9. REFER TO STRUCTURAL DRAWINGS FOR SEISMIC DESIGN INFORMATION. 1/R USED FOR CALCULATING SEISMIC FORCES OF THE CEILING SYSTEM SHALL BE 1.

LATERAL FORCE BRACE ASSEMBLY SPACING

DESIGN SPECTRAL ACCELERATION PARAMETER, (S_{DS})	BRACE ASSEMBLY SPACING	
	z/h ≤ 0.5[a]	z/h > 0.5[a,b]
S_{DS} ≤ 1.15	12'-0" x 12'-0"	12'-0" x 12'-0"

FOOTNOTES:
a. WHERE, AS DEFINED IN ASCE 7 SECTION 13.3.1:
z = HEIGHT IN STRUCTURE OF POINT OF ATTACHMENT OF CEILING WITH RESPECT TO THE BASE.
h = AVERAGE ROOF HEIGHT OF THE STRUCTURE WITH RESPECT TO THE BASE.
b. IT SHALL BE PERMITTED TO USE THE BRACE ASSEMBLY SPACING FOR "z/h > 0.5" FOR THE FULL BUILDING HEIGHT.

S_{DS} FOR THIS SCHOOL SITE = 0.642

REFLECTED CEILING PLAN NOTES:

1. SEE ROOM FINISH SCHEDULE FOR CEILING FINISHES.
2. SEE MECHANICAL AND ELECTRICAL FOR ADDITIONAL INFORMATION.

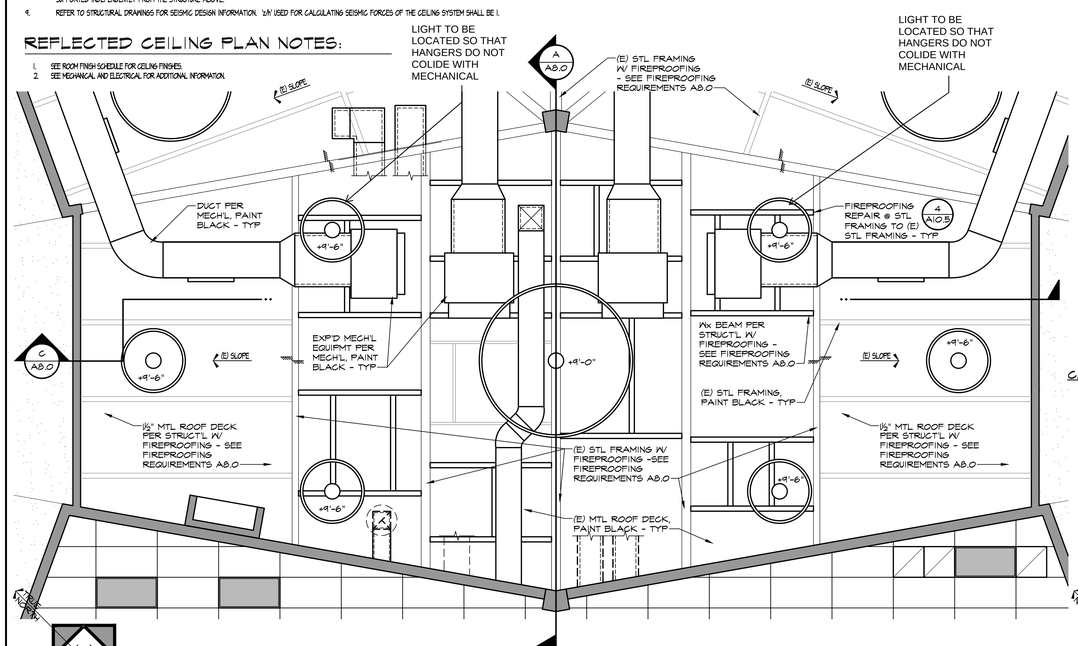

(A) ENLARGED REFLECTED CEILING PLAN - UNIT 1000

SCALE : 1/4" = 1'-0"

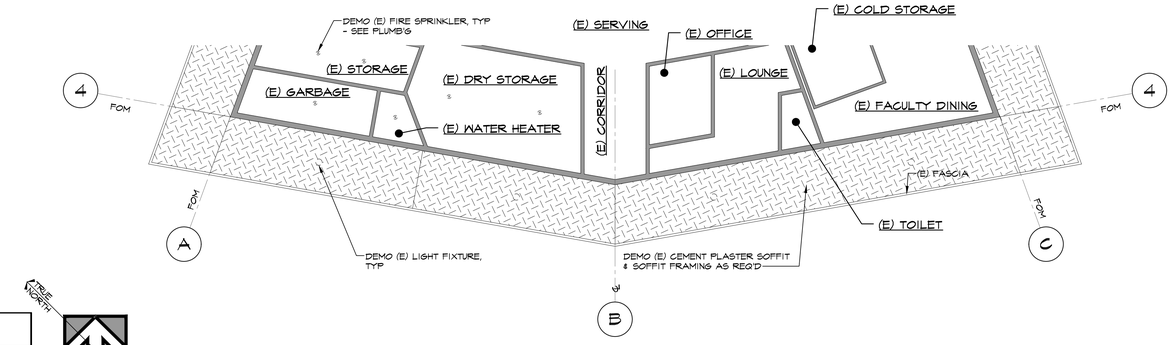

PARTIAL DEMO REFLECTED CEILING PLAN - UNIT 1000

SCALE : 1/8" = 1'-0"

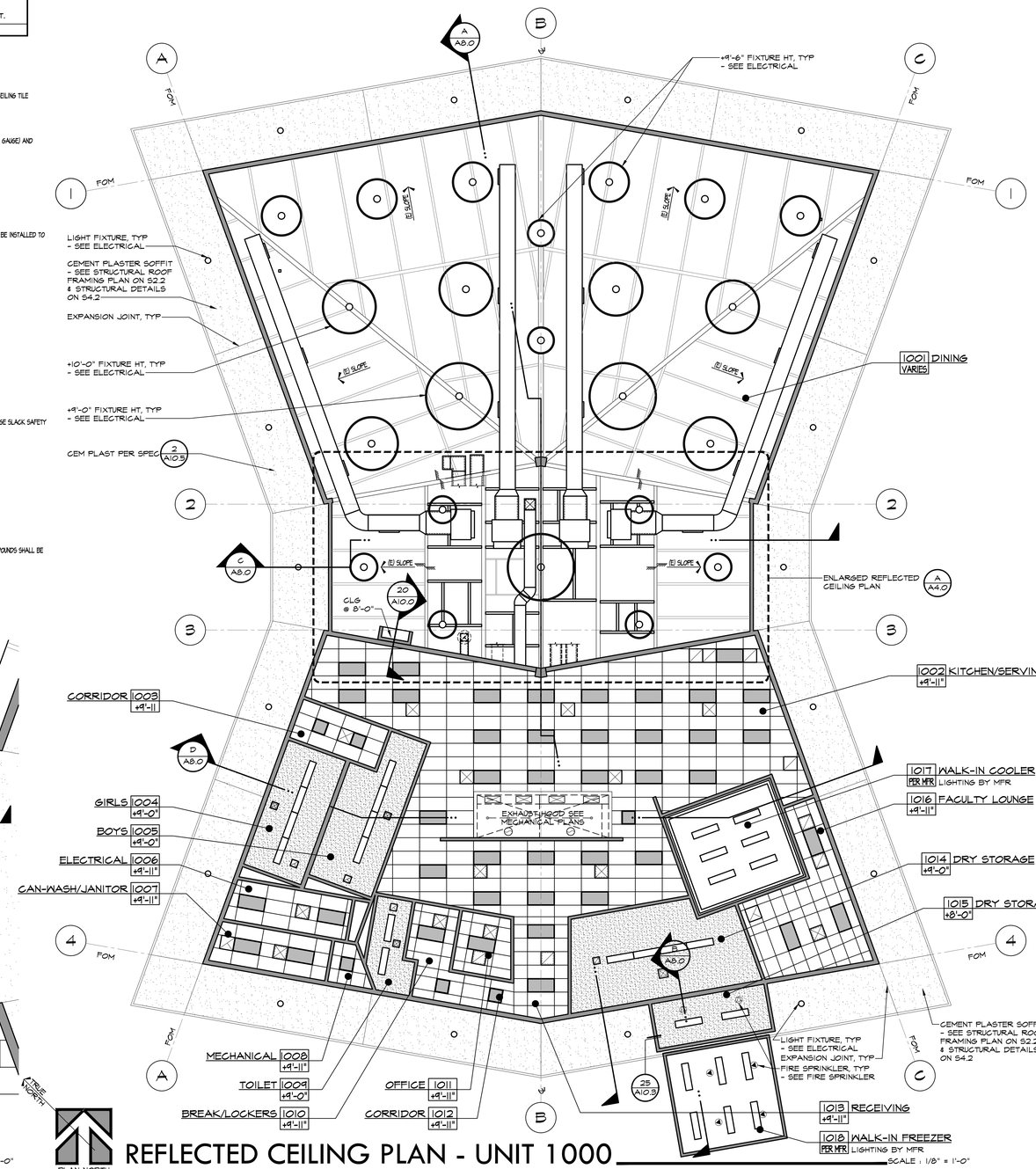

REFLECTED CEILING PLAN - UNIT 1000

SCALE : 1/8" = 1'-0"

IDENTIFICATION STAMP
DIV. OF THE STATE ARCHITECT
APP: 03-122528 INC:
REVIEWED FOR
SS ☑ FLS ☑ ACS ☑
DATE: 01/06/2025

PTN : 63529-385 FILE: 15-H3

HIGHLAND HIGH SCHOOL
CAFETERIA REHABILITATION AND MODERNIZATION
2900 ROYAL SCOTS WAY
FOR
KERN HIGH SCHOOL DISTRICT
BAKERSFIELD, KERN COUNTY, CALIFORNIA

ARCHITECT SCA inc.
1601 NEW STINE ROAD, SUITE 280
BAKERSFIELD, CA 93309
PH: (661) 397-4377
FAX: (661) 397-4378
WWW.SCARCHITECT.COM
LICENSED ARCHITECT STEPHEN J. CORBIN No. C-16794 Exp. 11/30/25 STATE OF CALIFORNIA
STEPHEN J. CORBIN, NCARB, AIA, LEED ®-AP

CHECK AND VERIFY ALL DIMENSIONS BEFORE PROCEEDING WITH THE WORK. REPORT DISCREPANCIES TO THE ARCHITECT. ALL CONSTRUCTION SHALL CONFORM TO THE C.B.C.

KERN HIGH SCHOOL DISTRICT
Tradition of Excellence
FOR 1893

REFLECTED CEILING PLAN - UNIT 1000

MARK	DATE	REVISIONS
1		
2		
3		

JOB NO. 1319
DRAWN : ED, FJS
CHECKED : BCW
DATE : 9/25/24

4.0
12 OF 99 SHEETS

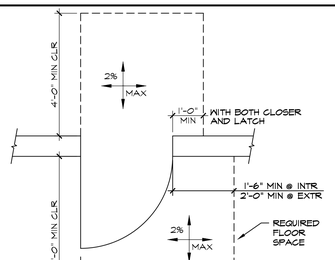

1 REQ'D FLOOR CLEARANCES SCALE: ½" = 1'-0"

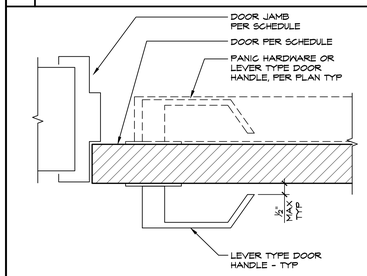

TITLE 19 SEC 18, 14-3 (f) LEVERS
THE LEVER OF LEVER ACTUATED LATCHES OR LOCKS SHALL BE CURVED WITH A RETURN TO WITHIN ½" OF THE DOOR TO PREVENT CATCHING ON CLOTHING OF PERSONS DURING EGRESS.

2 DOOR/GATE LEVER SCALE: 3" = 1'-0"

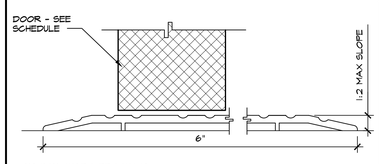

NATION GUARD PRODUCTS
613

3 THRESHOLD SCALE: 1"= 1'-0"

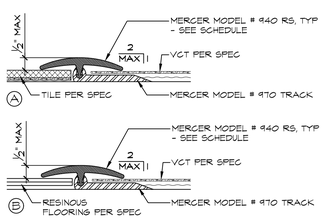

4 REDUCER STRIP SCALE: 6"= 1'-0"

DOOR SCHEDULE

BLDG #	DOOR #	DOOR TYPE	DOOR SIZE (EACH LEAF)	DOOR MAT'L	LOUVER SIZE	FRAME TYPE	FRAME MAT'L	RATING	PANIC HDWR	HNDR SET #	DETAILS L/JAMB	HEAD	R/JAMB	THRESHOLD/RS	REMARKS SEE TYP DOOR NOTE # 1,2,3,4,5,6,7,8 11,13,14,17,18, & 19. ADDITIONAL REQ'S ARE FOR ALL DOORS SCHEDULED	SIGN TYPE	DOOR #	BLDG #
UNIT 1000	1001A	(E)	3'-0"X6'-8" (PR)	(E)	-	(E)	(E)	-	(E) PH	-	-	-	-	-	--	A,B	1001A	UNIT 1000
	1001B	(E)	3'-1"X6'-8"	(E)	-	(E)	(E)	-	(E) PH	-	-	-	-	-	--	A,B	1001B	
	1001C	(E)	3'-1"X6'-8"	(E)	-	(E)	(E)	-	(E) PH	-	-	-	-	3/A5.0	--	A,B	1001C	
	1001D	(E)	3'-0"X6'-8"	(E)	-	(E)	(E)	-	(E) PH	-	-	-	-	-	--	A,B	1001D	
	1001E	(E)	3'-0"X6'-8"	(E)	-	(E)	(E)	-	(E) PH	-	-	-	-	-	--	A,B	1001E	
	1001F	(E)	3'-1"X6'-8"	(E)	-	(E)	(E)	-	(E) PH	-	-	-	-	3/A5.0	--	A,B	1001F	
	1001G	(E)	3'-1"X6'-8"	(E)	-	(E)	(E)	-	(E) PH	-	-	-	-	-	--	A,B	1001G	
	1001H	(E)	3'-0"X6'-8" (PR)	(E)	-	(E)	(E)	-	(E) PH	-	-	-	-	-	--	A,B	1001H	
	1002A	C	6'-0X9'-0"	-	-	-	-	-	-	-	-	-	-	-	PAINT	-	1002A	
	1002B	C	8'-0"X9'-0"	-	-	-	-	-	-	-	-	-	-	-	PAINT	-	1002B	
	1002C	C	8'-0"X9'-0"	-	-	-	-	-	-	-	-	-	-	-	PAINT	-	1002C	
	1002D	C	6'-0"X9'-0"	-	-	-	-	-	-	-	-	-	-	-	PAINT	-	1002D	
	1002E	B	3'-0"X6'-8"	HM	-	B	HM	1-HR	-	01	29/A10.1	17/A10.1	29/A10.1	3/A5.0	--	A,B	1002E	
	1003A	A	3'-0"X6'-8"	HM	-	B	HM	-	-	02	29/A10.1	17/A10.1	29/A10.1	3/A5.0	--	A,B	1003A	
	1004A	A	3'-0"X6'-8"	WD	-	A	HM	-	-	03	27/A10.1	21/A10.1	27/A10.1	4A/A5.0	--	G,H	1004A	
	1005A	A	3'-0"X6'-8"	WD	-	A	HM	-	-	03	27/A10.1	21/A10.1	27/A10.1	4A/A5.0	--	E,F	1005A	
	1006A	A	3'-0"X6'-8"	HM	-	B	HM	1-HR	-	04	29/A10.1	17/A10.1	29/A10.1	3/A5.0	SPANDREL GLAZING PER SPEC	A	1006A	
	1007A	A	3'-0"X6'-8" (PR) 2'-8"X6'-8"	HM	-	B	HM	-	-	05	29/A10.1	17/A10.1	29/A10.1	3/A5.0	SPANDREL GLAZING PER SPEC	A	1007A	
	1008A	A	3'-0"X6'-8"	HM	-	A	HM	-	-	06	29/A10.1	17/A10.1	29/A10.1	3/A5.0	SPANDREL GLAZING PER SPEC	A	1008A	
	1009A	A	3'-0"X6'-8"	WD	-	A	HM	-	-	07	27/A10.1	21/A10.1	27/A10.1	4B/A5.0	--	J,K	1009A	
	1011A	B	3'-0"X6'-8"	WD	-	A	HM	-	-	08	28/A10.1	21/A10.1	28/A10.1	4B/A5.0	--	A	1011A	
	1013A	B	2'-10"X6'-8" (PR)	HM	-	B	HM	-	-	09	29/A10.1	17/A10.1	29/A10.1	3/A5.0	--	A,B	1013A	
	1014A	A	3'-0"X6'-8"	WD	-	A	HM	-	-	10	28/A10.1	21/A10.1	28/A10.1	-	--	A	1014A	
	1015A	A	3'-0"X6'-8 (PR)	HM	-	B	HM	1-HR	-	11	28/A10.1	22/A10.1	28/A10.1	3/A5.0	--	A,B	1015A	
	1016A	B	3'-0"X6'-8"	WD	-	A	HM	-	-	12	28/A10.1	21/A10.1	28/A10.1	4B/A5.0	--	A	1016A	
	1016B	D	3'-0X7'-0"	HM	-	B	HM	-	-	13	7/A10.2	1/A10.2	7/A10.2	14/A10.2	SEE WINDOW TYPES FOR FRAME AT DOOR	A	1016B	

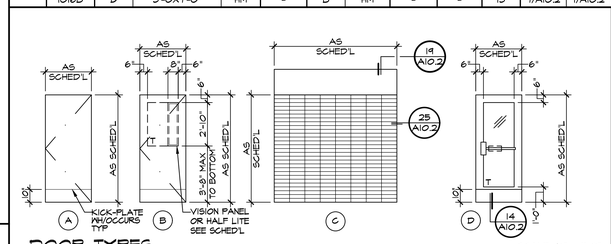

DOOR TYPES SCALE: ¼" = 1'-0"
HALF LITE SHALL BE TEMPERED GLASS
SAFETY IMPACT GLAZING SHALL COMPLY W/ CBC 2406,
TESTED IN ACCORDANCE W/ CPSC 16 CFR PART 1201

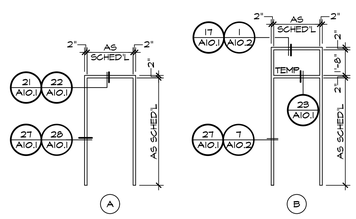

DOOR FRAMES SCALE: ¼"=1'-0"
AS VIEWED FROM EXTERIOR - UNO

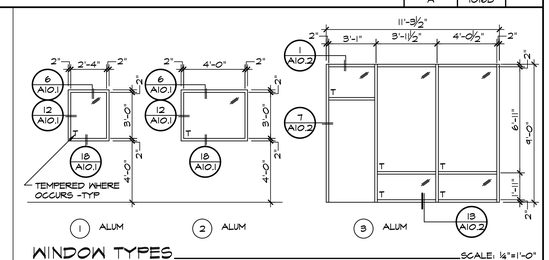

WINDOW TYPES SCALE: ¼"=1'-0"
AS VIEWED FROM EXTERIOR - UNO
GLASS TEMPERED WHERE OCCURS AS INDICATED ON FLOOR PLAN W/ (#)T
SAFETY IMPACT GALZING SHALL COMPLY W/ CBC 2406,
TESTED IN ACCORDANCE W/ CPSC 16 CFR PART 1201

TYPICAL DOOR NOTES

1. FOR BUILDERS HARDWARE, REFER TO SPECIFICATION SECTION 08 71 00
2. EXIT DOOR REQUIREMENTS:
   ALL EXIT DOORS IN SCHOOL BUILDINGS, INCLUDING BUT NOT LIMITED TO DOORS OF TOILETS, AND STORAGE ROOMS, SHALL CONFORM WITH THE REQUIREMENTS OF THE 2022 CBC TITLE 24 THE FOLLOWING ARE SOME OF THE REQUIREMENTS:
   EXIT DOORS SHALL OPEN FROM THE INSIDE WITHOUT THE USE OF A KEY OR ANY SPECIAL KNOWLEDGE OR EFFORT
   HAND ACTIVATED DOOR OPENING HARDWARE SHALL BE CENTERED BETWEEN 34" AND 44" (INCHES) ABOVE THE FLOOR
   DEAD BOLTS ARE NOT PERMITTED UNLESS OPERABLE WITH A SINGLE EFFORT BY LEVER TYPE HARDWARE
3. ALL EXTERIOR FACED DOOR GLAZING SHALL BE SINGLE GLAZED, TINTING TO MATCH WINDOW GLAZING
4. ALL ALUM DOORS & DOOR FRAMES SHALL BE ANODIZED ALUMINUM, PER SPEC
5. ALL HOLLOW METAL DOOR & DOOR FRAMES SHALL BE PAINTED W/ SEMI-GLOSS ENAMEL, PER SPEC
6. ALL WOOD DOORS SHALL RECEIVE STAIN W/ SEMI-TRANSPARENT FINISH, PER SPEC UNO
7. ALL INTERIOR DOOR FRAMES SHALL BE 2" WIDE UNO
8. ADJUST DOOR CLOSING DEVICES TO 5 LBS EXTERIOR & 5 LBS INTERIOR
9. PAINT LOUVER(S), SIZE AND LOCATION AS INDICATED, W/ SEMI-GLOSS ENAMEL FINISH, PER SPEC
10. ACCESSIBLE TOILET ROOM SIGNAGE, SEE TYPES THIS SHEET
11. ALL INTERIOR GLAZING SHALL BE ¼" CLEAR WIRE GLAZING UNO (SQUARE PATTERN) @ FIRE RATED ASSEMBLIES. FOR NON-RATED ASSEMBLIES USE ¼" CLEAR TEMP GLAZING
12. PROVIDE VISION PANEL, SIZE AS INDICATED. FOR NON-RATED ASSEMBLIES USE ¼" CLEAR TEMP GLAZING. FIRE RATED ASSEMBLIES SHALL BE FIRE RATED GLASS PER SPECIFICATIONS SEC 08 81 00
13. DOOR LEVER REQUIREMENTS (2/A5.0)
14. GROUT ALL HM DOOR JAMB BOTTOMS - TYP (4/A10.2)
15. NOT USED
16. NOT USED (10/A10.2)
17. PROVIDE DOOR SIGNAGE PER SPEC AND SCHEDULE
18. REFER TO STRUCTURAL DRAWING FOR HEADER SIZES REQUIRED
19. MIN FLOOR SPACE REQUIREMENTS AT DOORS (1/A5.0)
20. EACH UNIT OF TEMPERED GLAZING SHALL BE PERMANENTLY IDENTIFIED BY THE MANUFACTURER. THE IDENTIFICATION SHALL BE ETCHED OR CERAMIC FIRED ON THE GLAZING AND BE VISIBLE WHEN THE UNIT IS GLAZED. TEMPERED SPANDREL GLAZING IS EXEMPTED FROM PERMANENT LABELING BUT SUCH GLAZING SHALL BE IDENTIFIED BY THE MANUFACTURER WITH A REMOVABLE PAPER LABEL

REDUCER STRIP SCHEDULE

NOTE: ALL NUMBERS ARE MERCER RS-1 = 940 STRIP IN 970 TRACK (4/A5.0)

ROOM FINISH SCHEDULE

BLDG #	ROOM #	DESCRIPTION	FLOOR	BASE	WALLS NORTH	WALLS EAST	WALLS SOUTH	WALLS WEST	CEILING MAT'L	CEILING HEIGHT	REMARKS	ROOM #	BLDG #
UNIT 1000	1001	DINING	1G	1A	4B	4B	4B	4B	4A	VARIES	PAINT DUCTWORK, CONDUIT, UNDERSIDE OF ROOF DECK, BEAMS, GIRDERS, PURLINS, RAFTERS	1001	UNIT 1000
	1002	KITCHEN/SERVING	3E	3E	4B	4B	2A/4B	2A/4B	3A	9'-11"	-	1002	
	1003	CORRIDOR	1G	2A	1B	1B	1B	1B	3A	9'-11"	-	1003	
	1004	GIRLS	4A	2A	3A	3A	3A	4B	2B	9'-0"	THINSET FLOOR TILE	1004	
	1005	BOYS	4A	2A	3A	3A	3A	3A	2B	9'-0"	THINSET FLOOR TILE	1005	
	1006	ELECTRICAL	2D	1A	5B	1B	5B	5B	3A	9'-11"	-	1006	
	1007	CAN-WASH/JANITOR	2D	5D	5B	5B	5B	5B	3A	9'-11"	-	1007	
	1008	MECHANICAL	2D	1A	1B	1B	1B	1B	3A	9'-11"	-	1008	
	1009	TOILET	4A	2A	3A	3A	3A	3A	2B	9'-0"	-	1009	
	1010	BREAK/LOCKERS	3E	3E	1B	1B	1B	1B	3A	9'-11"	-	1010	
	1011	OFFICE	1G	1A	1B	1B	1B	1B	3A	9'-11"	-	1011	
	1012	CORRIDOR	3E	3E	1B	-	4B	1B	3A	9'-11"	-	1012	
	1013	RECEIVING	3E	3E	-	1B	4B	1B	3A	9'-11"	-	1013	
	1014	DRY STORAGE	3E	3E	1B	1B	1B	1B	2B	9'-0"	-	1014	
	1015	DRY STORAGE	3E	3E	4B	1B	1B	1B	2B	8'-0"	-	1015	
	1016	FACULTY LOUNGE	1G	1A	1B	4B	1B/4B	1B	3A	9'-11"	-	1016	
	1017	WALK-IN COOLER	2E	PER MFR	6G	6G	6G	6G	-	PER MFR	WALL FINISH & CEILING FINISH IS FOR SHELL OF ROOM SURROUNDING COOLER	1017	
	1018	WALK-IN FREEZER	2G	PER MFR	PER MFR	PER MFR	PER MFR	PER MFR	PER MFR	PER MFR	-	1018	

FINISH NOTES AND MATERIALS

FLOORS

1. VINYL COMPOSITION TILE (12X12)
2. CONCRETE
3. RESINOUS FLOORING
4. UNSLAZED CERAMIC MOSAIC TILE

BASE

1. 4" RUBBER TOPSET
2. 4" COVED GLAZED CERAMIC TILE (29/A10.0)
3. 6" RESINOUS FLOORING
4. SHEET VINYL
5. CONCRETE

WALLS

1. ⅝" TYPE "X" GYP BD WITH ⅛" VENEER PLASTER
2. STAINLESS STEEL CLADDING OVER ⅝" TYPE "X" GYP BD
3. GLAZED CERAMIC TILE PER SPEC (28/A10.0) (30/A10.0)
4. EXISTING CMU
5. EXISTING PLASTER
6. ⅝" TYPE "X" GYP BD, TAPED

CEILING

1. EXISTING
2. ⅝" TYPE "X" GYP BD WITH ⅛" VENEER PLASTER
3. 2X4 SUSPENDED ACOUSTICAL CEILING SYSTEM W/ OPTIMA HEALTH ZONE PANELS - SEE SUSPENDED CEILING NOTE 1.08 ON A4.0
4. EXPOSED METAL ROOF DECK W/ FIREPROOFING PER SPEC

FINISHES

A. FACTORY FINISH
B. PAINT - PER SPEC
C. SEALER WAX
D. EXISTING
E. FLUID APPLIED EPOXY
F. CONCRETE
G. PRIME PER SPEC

FINISH SCHEDULE NOTES

1. CERAMIC TILE SHALL BE INSTALLED IN ACCORDANCE W/ TILE COUNCIL OF AMERICA INSTALLATION PROCEDURES FOR COMMERCIAL CONSTRUCTION (CURRENT EDITION)
2. SEE INTERIOR ELEVATIONS FOR SOFFIT HEIGHTS
3. SEE REFLECTED CEILING PLAN FOR VOLUME CEILING
4. ALL GYP BOARD SHALL BE FIRE TAPED
5. ALL WOOD TRIMS @ DOORS & WINDOWS SHALL BE PAINTED W/ SEMI-GLOSS ENAMEL
6. ALL INTERIOR FINISHES SHALL CONFORM W/ CBC CHAPTER 8, CFC SECTION 803, TITLE 19 CCR
7. ALL CERAMIC TILE GROUT SHALL RECEIVE SEALANT

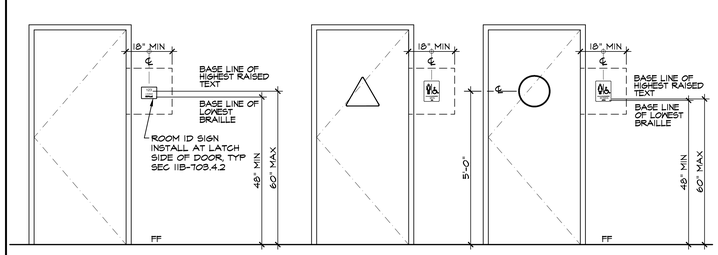

TYPICAL DOOR SIGNAGE MOUNTING HEIGHTS

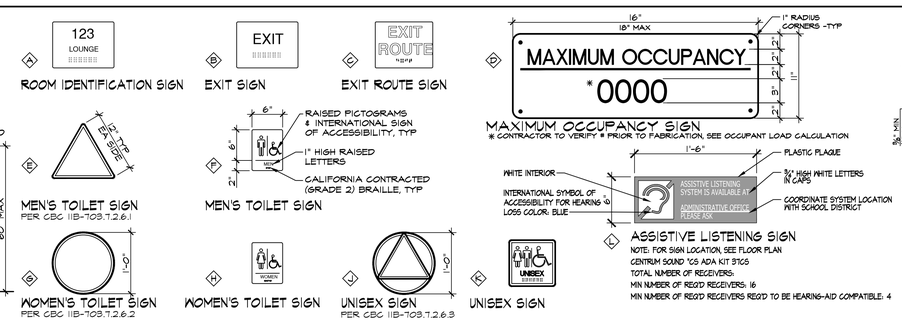

A ROOM IDENTIFICATION SIGN
B EXIT SIGN
C EXIT ROUTE SIGN
D MAXIMUM OCCUPANCY SIGN
* CONTRACTOR TO VERIFY # PRIOR TO FABRICATION, SEE OCCUPANT LOAD CALCULATION
E MEN'S TOILET SIGN PER CBC 11B-703.7.2.6.1
F MEN'S TOILET SIGN
G WOMEN'S TOILET SIGN PER CBC 11B-703.7.2.6.2
H WOMEN'S TOILET SIGN
J UNISEX SIGN PER CBC 11B-703.7.2.6.3
K UNISEX SIGN
L ASSISTIVE LISTENING SIGN
NOTE: FOR SIGN LOCATION, SEE FLOOR PLAN
CENTRUM SOUND 'CS ADA KIT 3TCS
TOTAL NUMBER OF RECEIVERS:
MIN NUMBER OF REQ'D RECEIVERS: 16
MIN NUMBER OF REQ'D RECEIVERS REQ'D TO BE HEARING-AID COMPATIBLE: 4

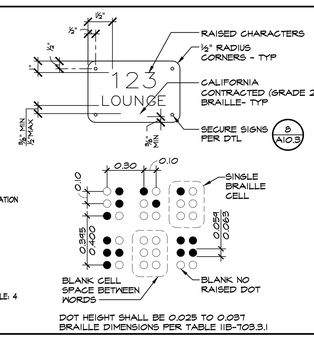

DOT HEIGHT SHALL BE 0.025 TO 0.037
BRAILLE DIMENSIONS PER TABLE 11B-703.3.1

NOTES:

1. RAISED CHARACTERS SHALL BE UPPERCASE LETTERS & NUMERALS. SAN SERIF ⅝" MIN TO 2" MAX HEIGHT AND 1/32" MIN RAISED ABOVE BACKGROUND AND SHALL BE DUPLICATED IN BRAILLE PER SECTIONS 11B-703.2 & 11B-703.3 CHARACTERS SHALL BE SELECTED FROM FONTS WHERE THE WIDTH OF THE UPPERCASE LETTER "O" IS 60% MIN & 110% MAX OF THE HEIGHT OF THE UPPERCASE LETTER "I". STROKE THICKNESS OF THE UPPERCASE LETTER "I" SHALL BE 15% MAX OF THE HEIGHT OF CHARACTER. CHARACTER SPACING SHALL BE MEASURED BETWEEN THE TWO CLOSEST POINTS OF ADJACENT RAISED CHARACTERS WITHIN THE MESSAGE. EXCLUDING WORD SPACES. WHERE CHARACTERS HAVE RECTANGULAR CROSS SECTIONS, SPACING BETWEEN INDIVIDUAL RAISED CHARACTERS SHALL BE ⅛" MIN AND 4 TIMES THE RAISED CHARACTER STROKE WIDTH MAX. WHERE CHARACTERS HAVE OTHER CROSS SECTIONS, SPACING BETWEEN INDIVIDUAL RAISED CHARACTERS SHALL BE ⅛" MIN AND 4 TIMES THE RAISED CHARACTER STROKE WIDTH MAX AT THE TOP OF CROSS SECTIONS, AND 1/8" AND 4 TIMES THE RAISED CHARACTER STROKE WIDTH MAX AT THE TOP OF CROSS SECTIONS. CHARACTERS SHALL BE SEPARATED FROM RAISED BORDERS AND DECORATIVE ELEMENTS ⅜" MIN.
2. BRAILLE SHALL BE CALIFORNIA CONTRACTED (GRADE 2) AND SHALL COMPLY WITH SECTIONS 11B-703.3 & 11B-703.4. BRAILLE DOTS SHALL BE DOMED OR ROUNDED.
3. SIGNAGE SHOWN HEREIN ARE NOT NECESSARILY INCLUDED IN THIS PROJECT. REFER TO PLANS AND SPECIFICATIONS FOR SIGNAGE TYPE AND LOCATION.
4. DIRECTIONAL SIGNS PER PLAN & DESIGNATED AT PATH OF TRAVEL.
5. TACTILE SIGNAGE MOUNTING AND ATTACHMENT PER SPECIFICATIONS.

5 DOOR SIGNAGE SCALE: NTS

IDENTIFICATION STAMP
DIV. OF THE STATE ARCHITECT
APP: 03-122528 INC:
REVIEWED FOR
SS ☑ FLS ☑ ACS ☑
DATE: 01/06/2025

PTN: 63529-385 FILE: 15-H3

HIGHLAND HIGH SCHOOL
CAFETERIA REHABILITATION AND MODERNIZATION
2900 ROYAL SCOTS WAY
FOR
KERN HIGH SCHOOL DISTRICT
BAKERSFIELD, KERN COUNTY, CALIFORNIA

SCARCHITECT inc.
1601 NEW STINE ROAD, SUITE 280
BAKERSFIELD, CA 93309
PH: (661) 397-4377
FAX: (661) 397-4378
WWW.SCARCHITECT.COM
STEPHEN J. CORBIN, NCARB, AIA, LEED ®-AP

CHECK AND VERIFY ALL DIMENSIONS BEFORE PROCEEDING WITH THE WORK. REPORT DISCREPANCIES TO THE ARCHITECT. ALL CONSTRUCTION SHALL CONFORM TO THE C.B.C.

DOOR SCHEDULE, ROOM FINISH SCHEDULE & DETAILS

MARK	DATE	REVISIONS
1		
2		
3		

JOB NO. 1319
DRAWN: ED, FJS
CHECKED: BCW
DATE: 9/25/24

5.0
13 OF 99 SHEETS

LEGEND:

- - - - - - BUILDING PROFILE BELOW

DEMO (E) ROOFING PER PLAN

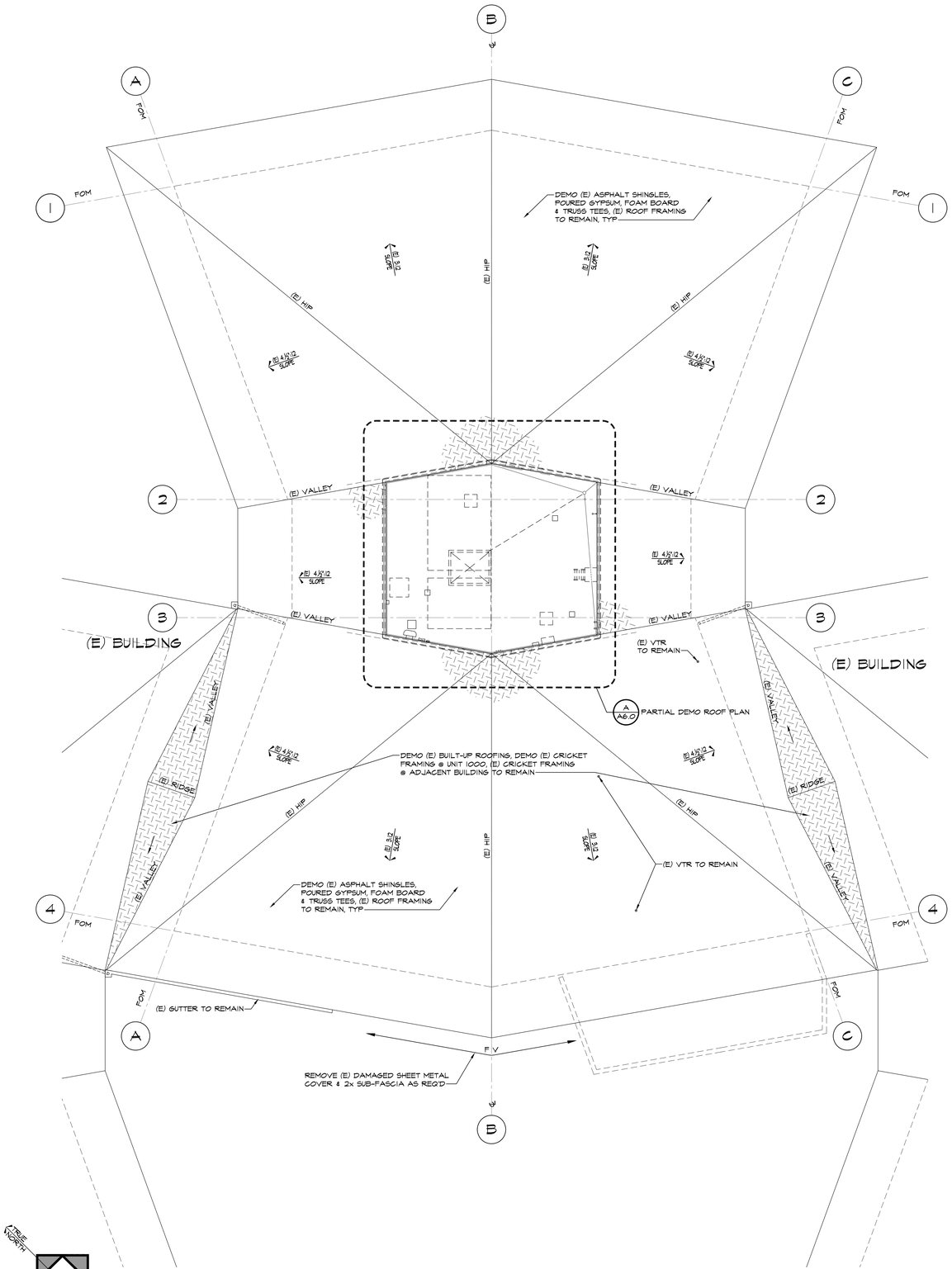

OVERALL DEMO ROOF PLAN - UNIT 1000 SCALE : 1/8" = 1'-0"

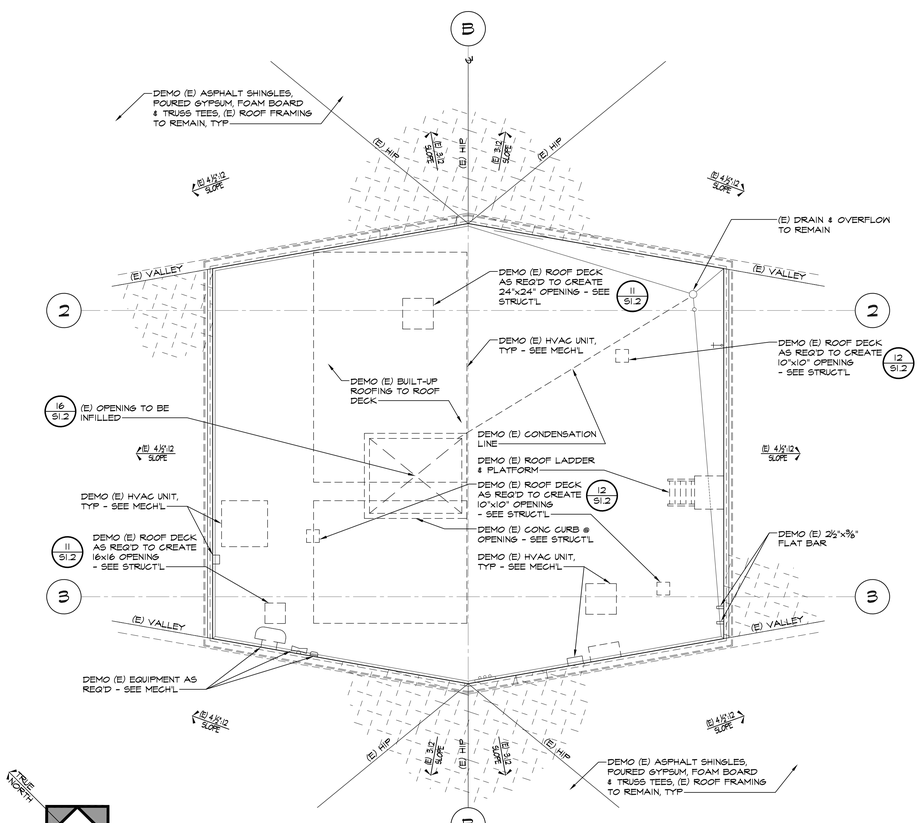

A PARTIAL DEMO ROOF PLAN - UNIT 1000 SCALE : 1/4" = 1'-0"

IDENTIFICATION STAMP
DIV. OF THE STATE ARCHITECT
APP: 03-122528 INC:
REVIEWED FOR
SS ☑ FLS ☑ ACS ☑
DATE: 01/06/2025

PTN : 63529-385 FILE: 15-H3

HIGHLAND HIGH SCHOOL

CAFETERIA REHABILITATION AND MODERNIZATION

2900 ROYAL SCOTS WAY
FOR
KERN HIGH SCHOOL DISTRICT
BAKERSFIELD, KERN COUNTY, CALIFORNIA

ARCHITECT INC.
1601 NEW STINE ROAD, SUITE 280
BAKERSFIELD, CA 93309
PH: (661) 397-4377
FAX: (661) 397-4378
WWW.SCARCHITECT.COM

LICENSED ARCHITECT STEPHEN J. CORBIN C-18282 STATE OF CALIFORNIA

STEPHEN J. CORBIN, NCARB, AIA, LEED ®-AP

CHECK AND VERIFY ALL DIMENSIONS BEFORE PROCEEDING WITH THE WORK. REPORT DISCREPANCIES TO THE ARCHITECT. ALL CONSTRUCTION SHALL CONFORM TO THE C.B.C.

KERN HIGH SCHOOL DISTRICT
Tradition of Excellence
Est. 1893

DEMO ROOF PLAN - UNIT 1000

MARK	DATE	REVISIONS
1		
2		
3		

JOB NO. 1319
DRAWN : ED, FJS
CHECKED : BCW
DATE : 9/25/24

6.0
14 OF 99 SHEETS

ROOFING NOTES:

1. CONTRACTOR SHALL REMOVE ANY AND ALL EQUIPMENT, CONDUITS, PIPES, CABLES ETC., AS REQ'D TO ENSURE THE PROPER INSTALLATION OF ROOFING AS SPECIFIED AT NO ADDITIONAL COST TO THE OWNER
2. CONTRACTOR SHALL FIELD VERIFY ALL (E) ROOF CONDITIONS AND PENETRATIONS PRIOR TO BEGINNING WORK AND SHALL ASSUME RESPONSIBILITY FOR ALL ITEMS REGARDLESS IF SHOWN OR NOT ON THESE PLANS
3. ALL (E) EXPOSED ROOF MOUNTED PIPE/ CONDUIT SHALL REMOVED, FOR INSTALLATION OF ROOF MOUNTED PIPE/CONDUIT, SEE DETAIL 16/A10.5 SEE ALSO MECH & ELEC
4. CLASS "A" BUILT-UP ROOFING
5. CONTRACTOR SHALL INSTALL STEEL ANGLES PER STRUCTURAL PLANS, AS REQUIRED AT ROOF PENETRATIONS
6. CONTRACTOR SHALL INSTALL FLASHING AT ROOF PENETRATIONS, FRAMED CURBS, ETC. PER SPEC, TYP.
7. LEVEL PLATFORM FRAMING SEE STRUCTURAL PLAN
8. SEE STRUCTURAL, MECHANICAL, PLUMBING AND ELECTRICAL DRAWINGS, FOR ADDITIONAL INFORMATION FOR WORK INDICATED.

FIRE PROOFING NOTES:

1. SEE CHART ON A8.0 FOR PROTECTION REQUIREMENTS

LEGEND:

- BUILDING PROFILE BELOW
- ASPHALT SHINGLES PER SPEC 5/A10.5
- TPO ROOFING PER SPEC 11/A10.5

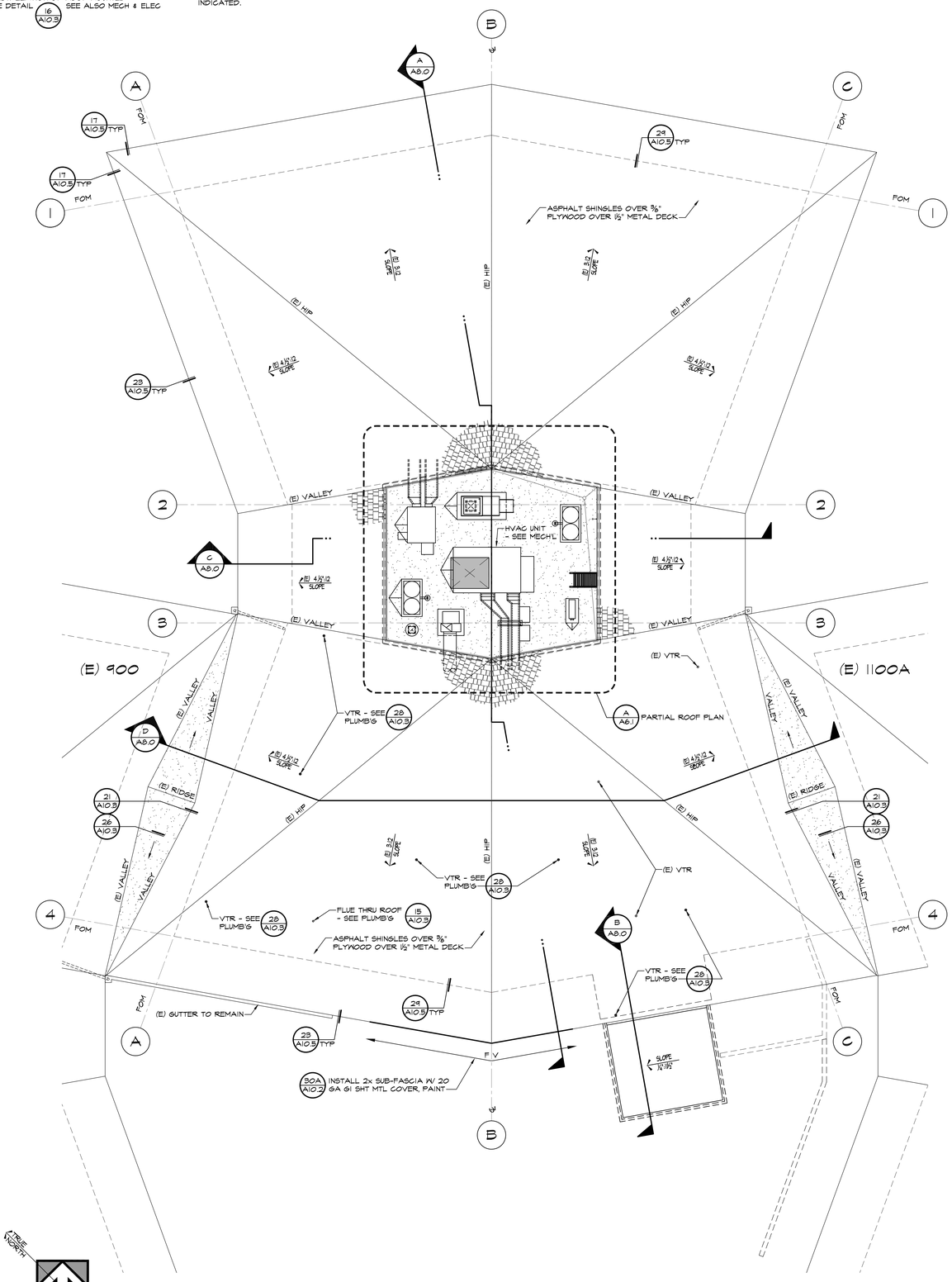

OVERALL ROOF PLAN - UNIT 1000 — SCALE : 1/8" = 1'-0"

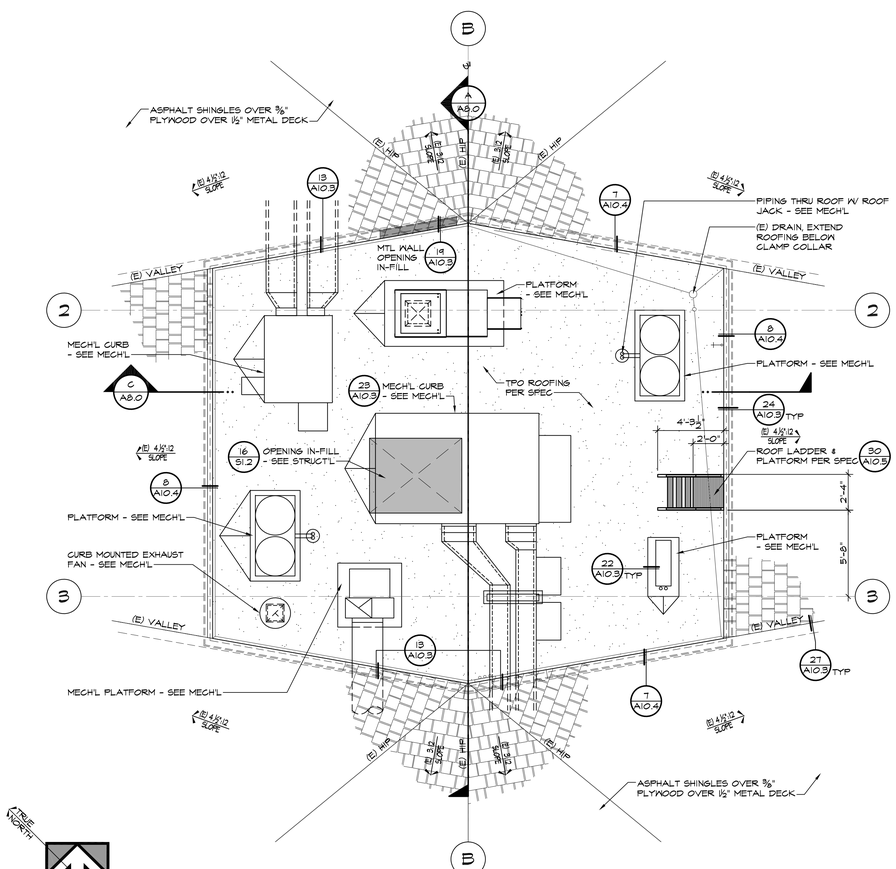

PARTIAL ROOF PLAN - UNIT 1000 — SCALE : 1/4" = 1'-0"

IDENTIFICATION STAMP
DIV. OF THE STATE ARCHITECT
APP: 03-122528 INC:
REVIEWED FOR
SS ☑ FLS ☑ ACS ☑
DATE: 01/06/2025

PTN : 63529-385 FILE: 15-H3

HIGHLAND HIGH SCHOOL
CAFETERIA REHABILITATION AND MODERNIZATION
2900 ROYAL SCOTS WAY
FOR
KERN HIGH SCHOOL DISTRICT
BAKERSFIELD, KERN COUNTY, CALIFORNIA

ARCHITECT inc.
1601 NEW STINE ROAD, SUITE 280
BAKERSFIELD, CA 93309
PH: (661) 397-4377
FAX: (661) 397-4378
WWW.SCARCHITECT.COM

LICENSED ARCHITECT STEPHEN J. CORBIN C-15787 CALIFORNIA

STEPHEN J. CORBIN, NCARB, AIA, LEED ®-AP

CHECK AND VERIFY ALL DIMENSIONS BEFORE PROCEEDING WITH THE WORK. REPORT DISCREPANCIES TO THE ARCHITECT. ALL CONSTRUCTION SHALL CONFORM TO THE C.B.C.

KERN HIGH SCHOOL DISTRICT — Tradition of Excellence — Est. 1893

ROOF PLAN
- UNIT 1000

MARK	DATE	REVISIONS
1		
2		
3		

JOB NO. 1319
DRAWN : ED, FJS
CHECKED : BCW
DATE : 9/25/24

6.1
15 OF 99 SHEETS

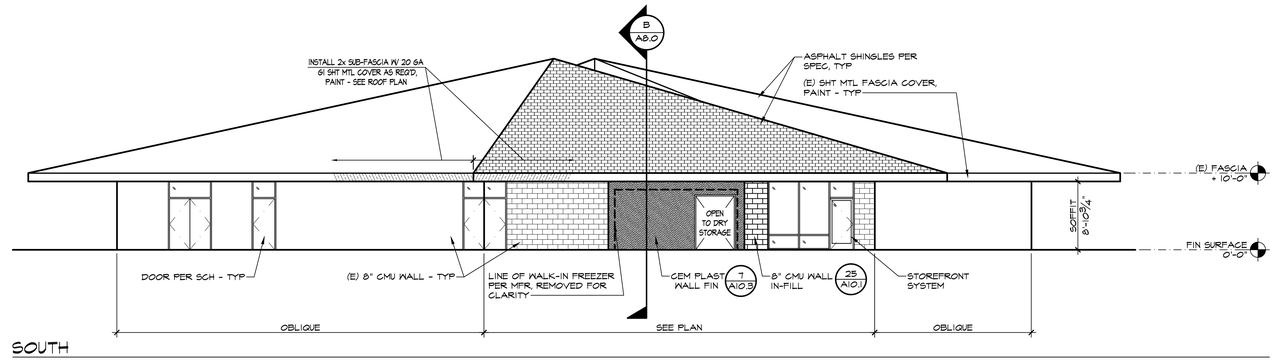

SOUTH

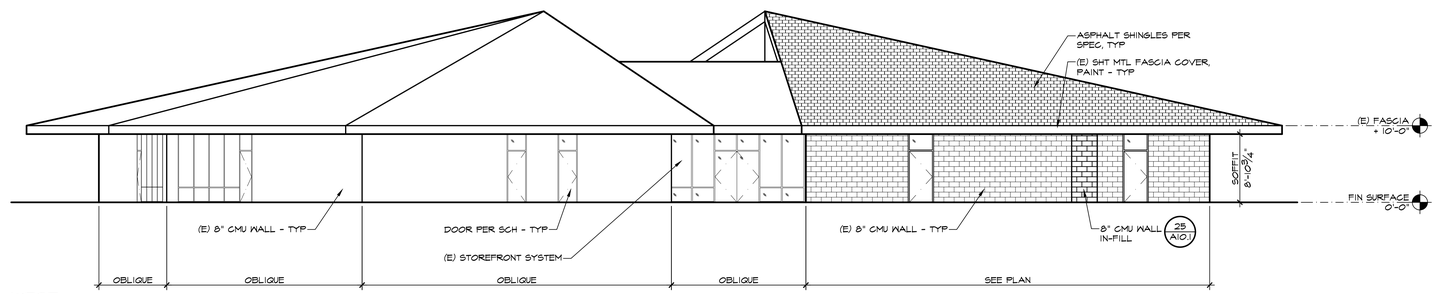

WEST

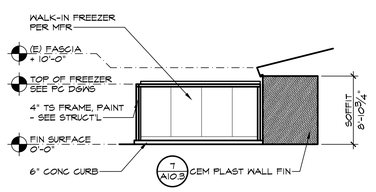

PARTIAL EAST

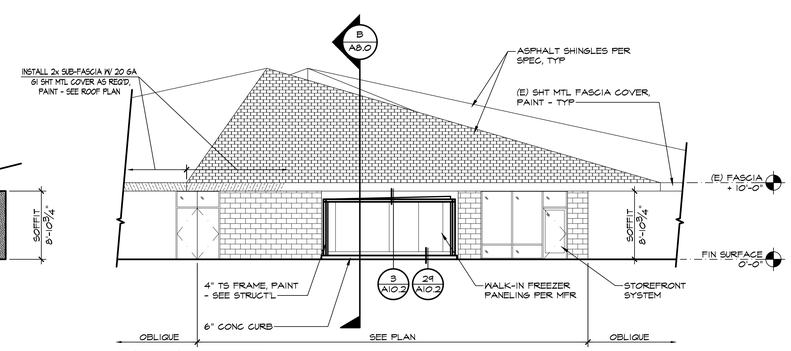

PARTIAL SOUTH

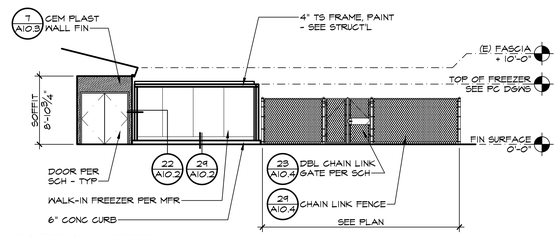

PARTIAL WEST

EXTERIOR ELEVATIONS

SCALE: 1/8" = 1'-0"

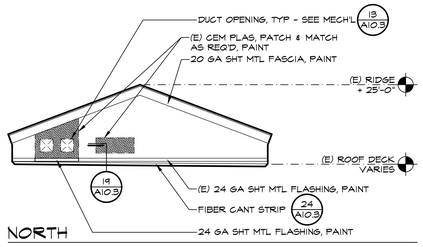

NORTH

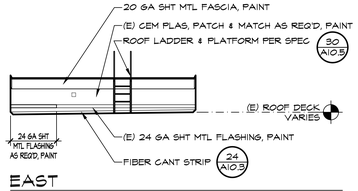

EAST

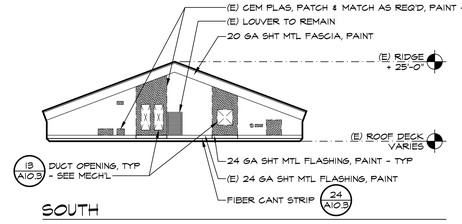

SOUTH

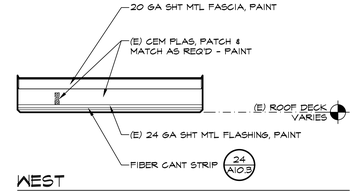

WEST

ROOF WELL ELEVATIONS

SCALE: 1/8" = 1'-0"

IDENTIFICATION STAMP
DIV. OF THE STATE ARCHITECT
APP: 03-122528 INC:
REVIEWED FOR
SS ☑ FLS ☑ ACS ☑
DATE: 01/06/2025

PTN: 63529-385 FILE: 15-H3

HIGHLAND HIGH SCHOOL

CAFETERIA REHABILITATION AND MODERNIZATION

2900 ROYAL SCOTS WAY
FOR
KERN HIGH SCHOOL DISTRICT
BAKERSFIELD, KERN COUNTY, CALIFORNIA

ARCHITECT SCA inc.
1601 NEW STINE ROAD, SUITE 280
BAKERSFIELD, CA 93309
PH: (661) 397-4377
FAX: (661) 397-4378
WWW.SCARCHITECT.COM

LICENSED ARCHITECT
STEPHEN J. CORBIN
C-15742
CALIFORNIA

STEPHEN J. CORBIN, NCARB, AIA, LEED ®-AP

CHECK AND VERIFY ALL DIMENSIONS BEFORE PROCEEDING WITH THE WORK. REPORT DISCREPANCIES TO THE ARCHITECT. ALL CONSTRUCTION SHALL CONFORM TO THE C.B.C.

KERN HIGH SCHOOL DISTRICT
Tradition of Excellence
Est. 1893

EXTERIOR ELEVATIONS & ROOF WELL ELEVATIONS

MARK	DATE	REVISIONS
1		
2		
3		

JOB NO. 1319
DRAWN: ED, FJS
CHECKED: BCW
DATE: 9/25/24

7.0
16 OF 99 SHEETS

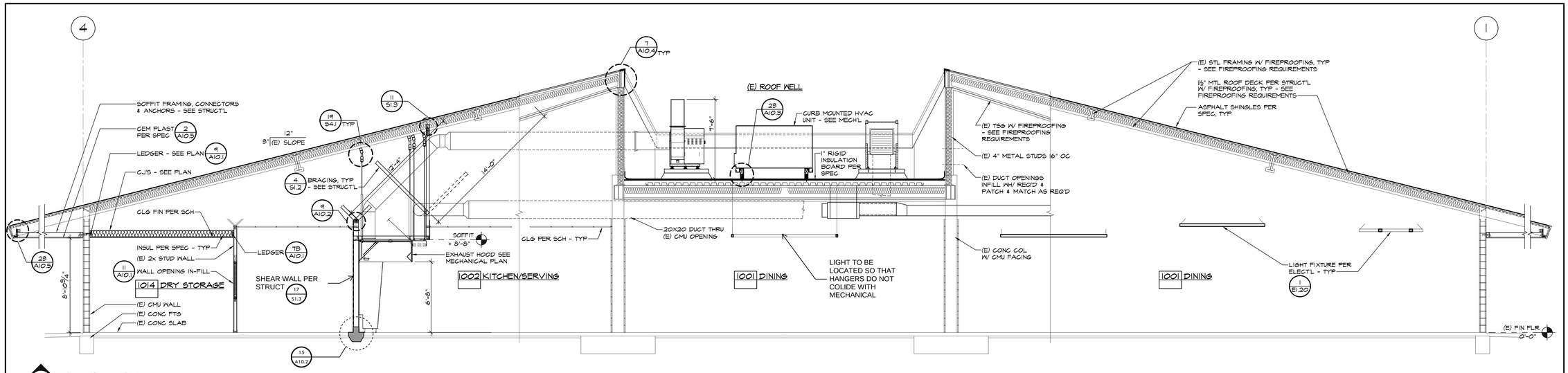

A SECTION

SCALE : 1/4" = 1'-0"

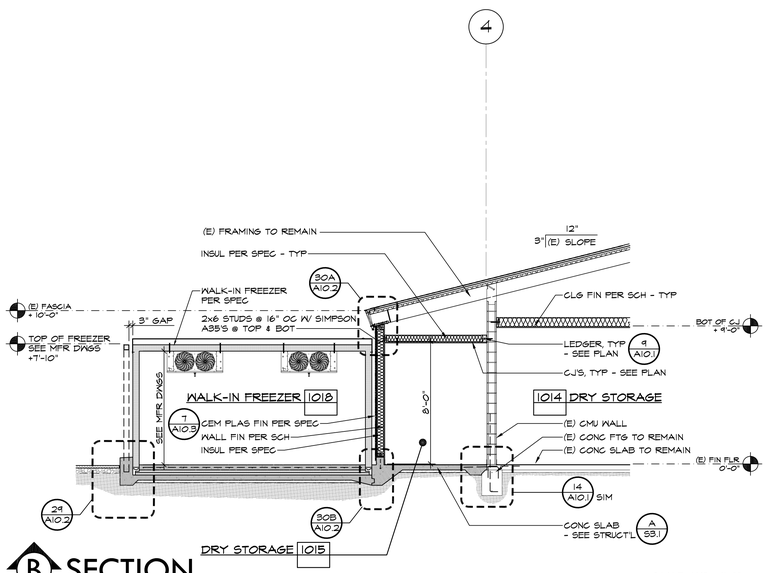

B SECTION

SCALE: 1/4" = 1'-0"

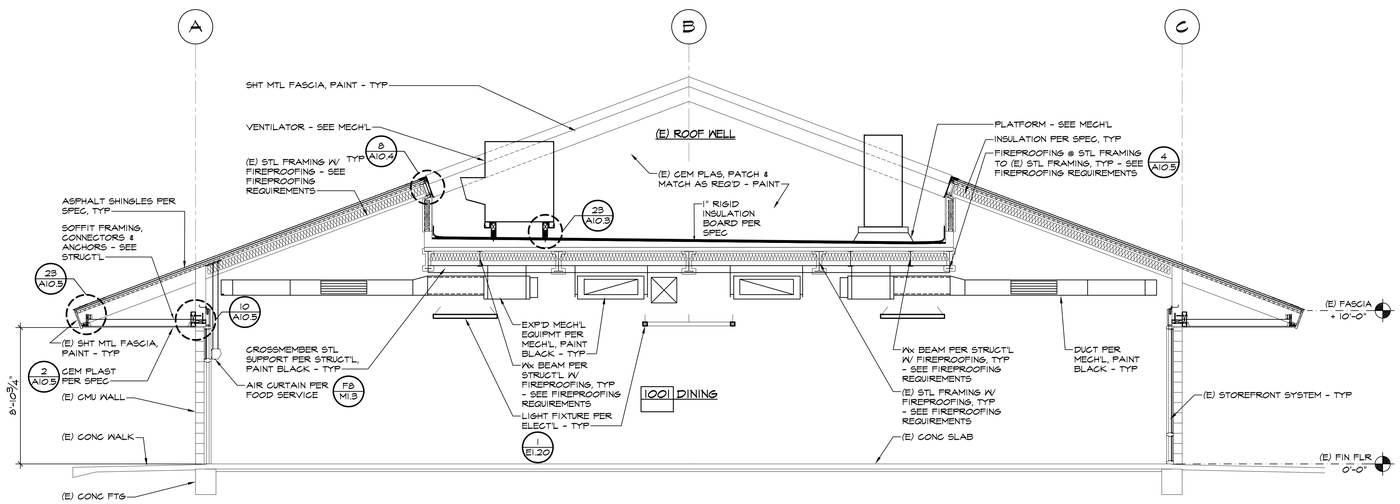

C SECTION

SCALE : 1/4" = 1'-0"

FIREPROOFING REQUIREMENTS:			
MECHANICAL ROOF WELL			
LOCATION	UL RATING	DESIGN #	HR
CONCRETE DECK	ANSI/UL263	DESIGN #D579	2HR
BEAMS	ANSI/UL263	DESIGN #N759	3HR
MAIN ROOF DECK			
LOCATION	UL RATING	DESIGN #	HR
METAL DECK	ANSI/UL263	DESIGN #P723	1HR
BEAMS	ANSI/UL263	DESIGN #5721	3HR
TS COLUMNS	ANSI/UL263	DESIGN #X740	3HR

THE INTENT OF THE FIREPROOFING AS INDICATED HEREIN IS TO MATCH THE PROTECTION OF THE MEMBERS FROM THE ORIGINAL CONSTRUCTION IN WHICH IS SCHEDULED FOR DEMOLITION/ABATEMENT.
1. PURLINS OR SECONDARY STRUCTURAL ROOF MEMBERS SHALL HAVE TWO (2) HOUR SPRAYED-ON FIRE PROTECTION
2. PRIMARY STRUCTURAL FRAMING MEMBERS, COLUMNS, GIRDERS AND BEAMS SHALL HAVE THREE (3) HOUR SPRAYED-ON FIRE PROTECTION

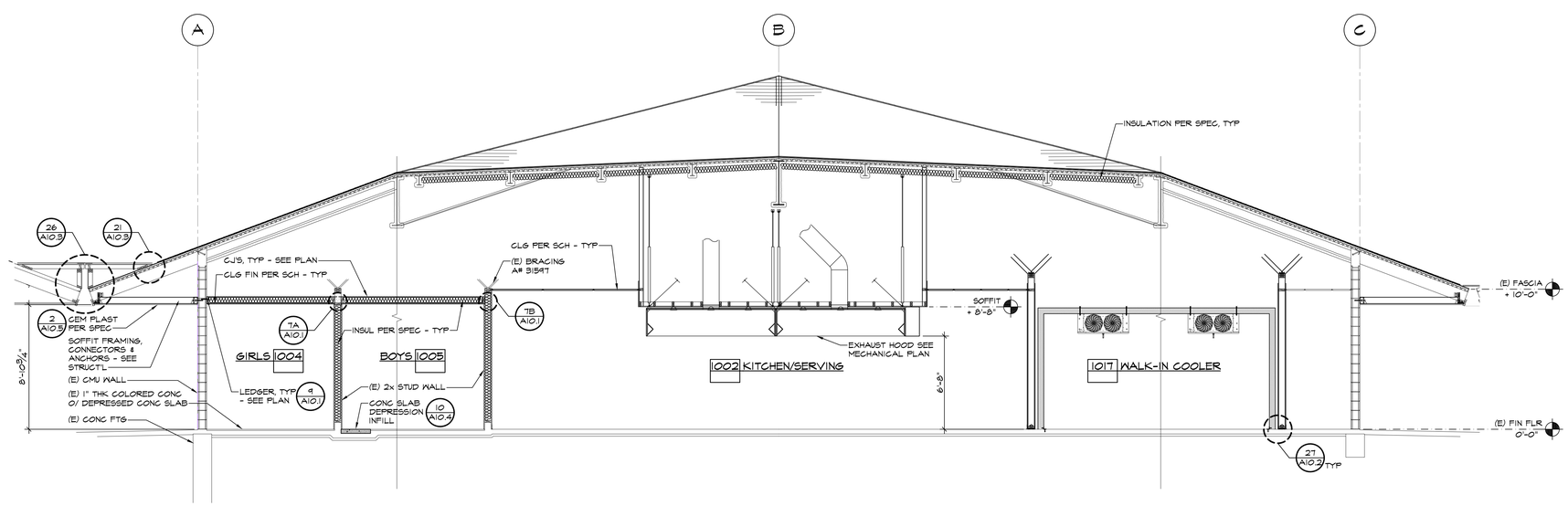

D SECTION

SCALE : 1/4" = 1'-0"

IDENTIFICATION STAMP
DIV. OF THE STATE ARCHITECT
APP: 03-122528 INC:
REVIEWED FOR
SS ☑ FLS ☑ ACS ☑
DATE: 01/06/2025

PTN : 63529-385 FILE: 15-H3

HIGHLAND HIGH SCHOOL
CAFETERIA REHABILITATION AND MODERNIZATION
2900 ROYAL SCOTS WAY
FOR
KERN HIGH SCHOOL DISTRICT
BAKERSFIELD, KERN COUNTY, CALIFORNIA

ARCHITECT S inc.
1601 NEW STINE ROAD, SUITE 280
BAKERSFIELD, CA 93309
PH: (661) 397-4377
FAX: (661) 397-4378
WWW.SCARCHITECT.COM
LICENSED ARCHITECT STEPHEN J. CORBIN C-17502 EXP. 12/31/24 STATE OF CALIFORNIA
STEPHEN J. CORBIN, NCARB, AIA, LEED ®.AP

CHECK AND VERIFY ALL DIMENSIONS BEFORE PROCEEDING WITH THE WORK. REPORT DISCREPANCIES TO THE ARCHITECT. ALL CONSTRUCTION SHALL CONFORM TO THE C.B.C.

KERN HIGH SCHOOL DISTRICT
Tradition of Excellence
Est. 1893

BUILDING SECTIONS

MARK	DATE	REVISIONS
1		
2		
3		

JOB NO. 1319
DRAWN : ED, FJS
CHECKED : BCW
DATE : 9/25/24

8.0
17 OF 99 SHEETS

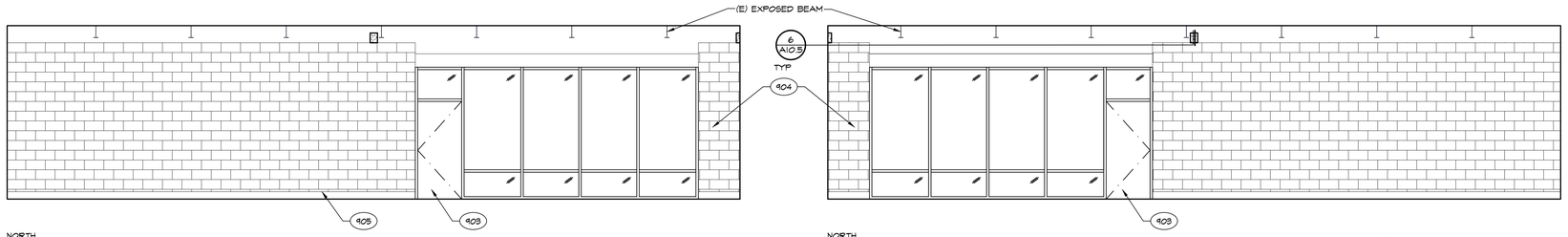

1001 DINING

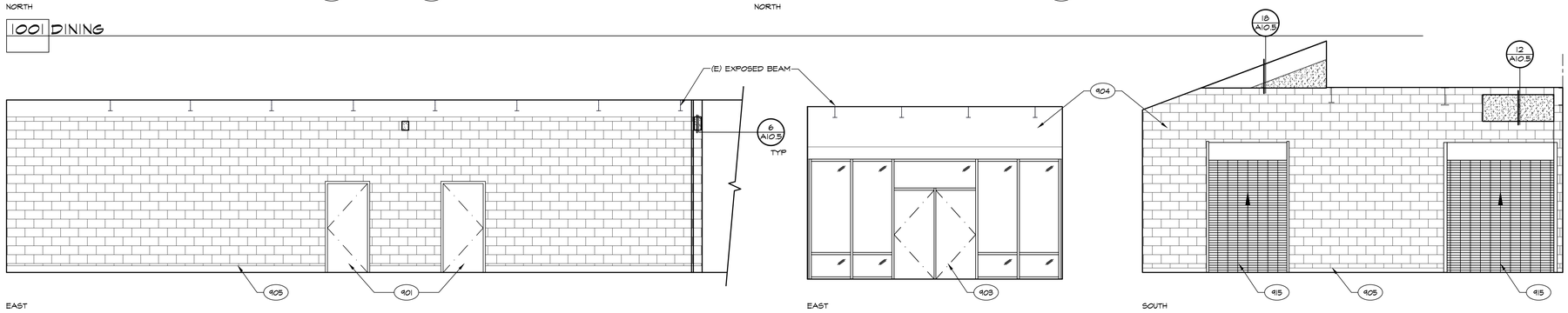

1001 DINING

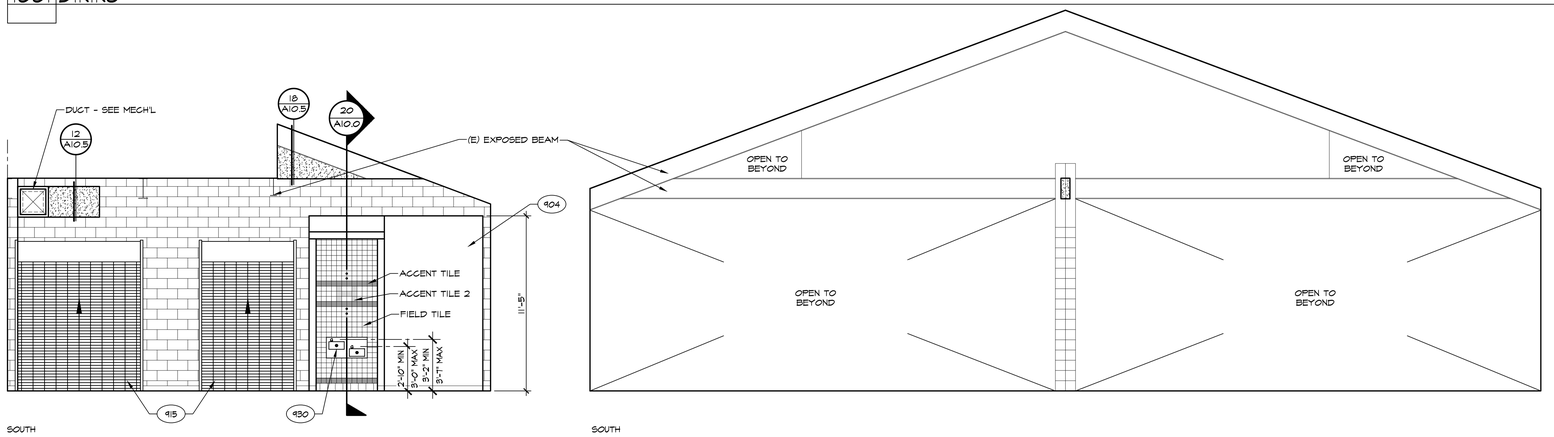

1001 DINING
CONTINUED

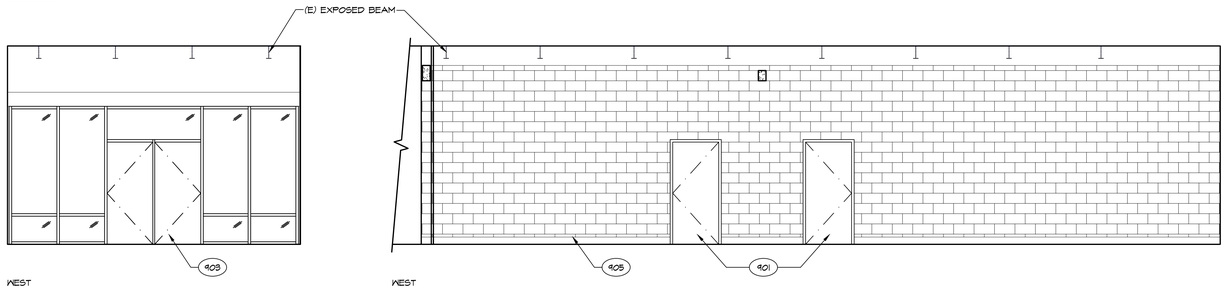

1001 DINING
CONTINUED

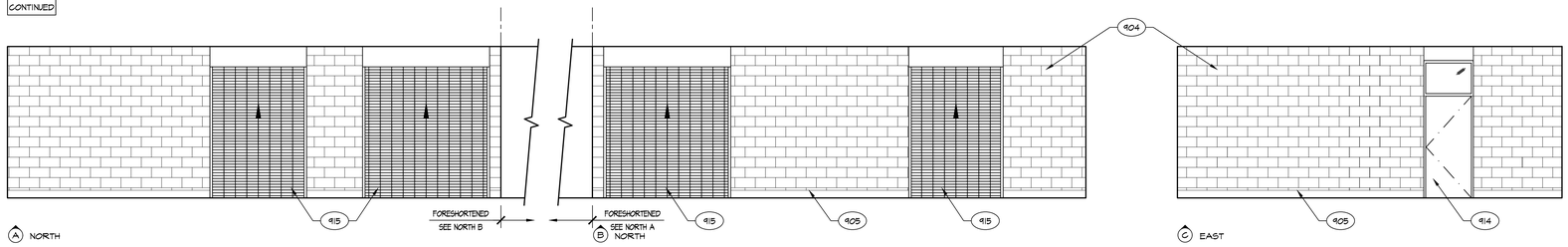

1002 KITCHEN/SERVING

INTERIOR ELEVATIONS

SCALE: 1/4" = 1'-0"

KEYNOTES

901	(E) DOOR, FRAME & HARDWARE	
903	(E) STOREFRONT SYSTEM	
904	WALL FINISH - SEE ROOM FINISH SCHEDULE	
905	BASE - SEE ROOM FINISH SCHEDULE	
914	DOOR PER SCHEDULE	- A5.0
915	OVERHEAD ROLLING GRILLE PER SCHEDULE & SPECIFICATIONS	14 A10.0
930	DRINKING FOUNTAIN - SEE PLUMBING PLAN	13 A10.0

IDENTIFICATION STAMP
DIV. OF THE STATE ARCHITECT
APP: 03-122528 INC:
REVIEWED FOR
SS ☑ FLS ☑ ACS ☑
DATE: 01/06/2025

PTN: 63529-385 FILE: 15-H3

HIGHLAND HIGH SCHOOL
CAFETERIA REHABILITATION AND MODERNIZATION
2900 ROYAL SCOTS WAY
FOR
KERN HIGH SCHOOL DISTRICT
BAKERSFIELD, KERN COUNTY, CALIFORNIA

ARCHITECT SCA inc.
1601 NEW STINE ROAD, SUITE 280
BAKERSFIELD, CA 93309
PH: (661) 397-4377
FAX: (661) 397-4378
WWW.SCARCHITECT.COM

LICENSED ARCHITECT STEPHEN J. CORBIN No. 16785 Exp. 11/30/25 STATE OF CALIFORNIA

STEPHEN J. CORBIN, NCARB, AIA, LEED ®-AP

CHECK AND VERIFY ALL DIMENSIONS BEFORE PROCEEDING WITH THE WORK. REPORT DISCREPANCIES TO THE ARCHITECT. ALL CONSTRUCTION SHALL CONFORM TO THE C.B.C.

KERN HIGH SCHOOL DISTRICT
Tradition of Excellence
EST. 1893

INTERIOR ELEVATIONS

MARK	DATE	REVISIONS
1		
2		
3		

JOB NO. 1319
DRAWN: ED, FJS
CHECKED: BCW
DATE: 9/25/24

9.0
18 OF 99 SHEETS

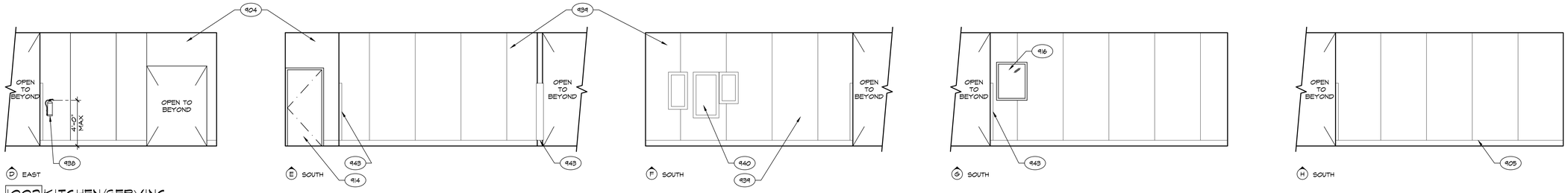

1002 KITCHEN/SERVING
CONTINUED

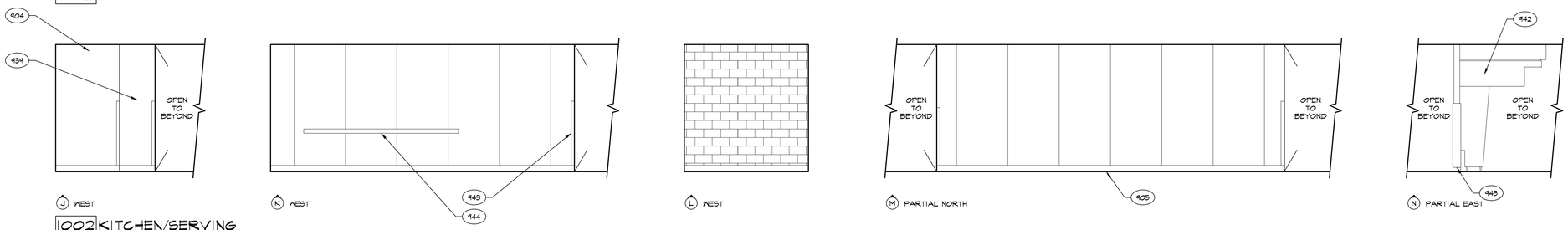

1002 KITCHEN/SERVING
CONTINUED

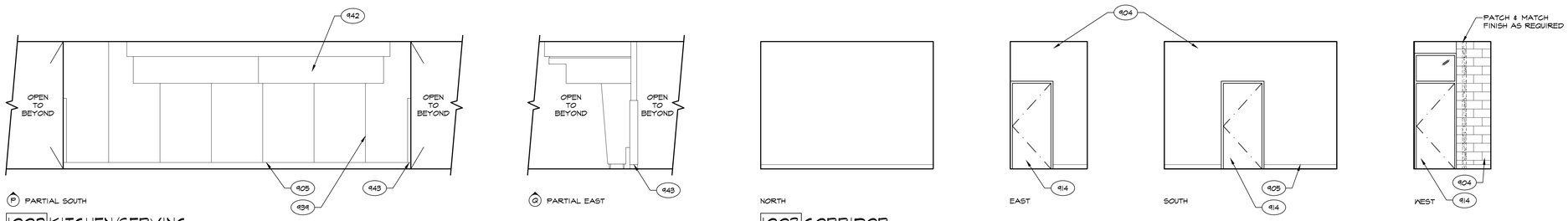

1002 KITCHEN/SERVING
CONTINUED

1003 CORRIDOR

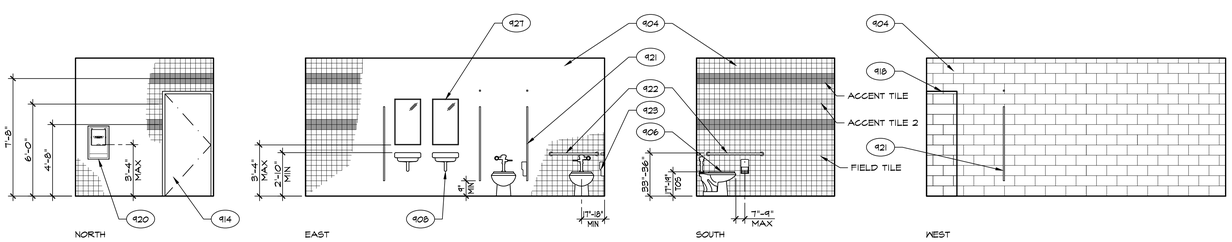

1004 GIRLS

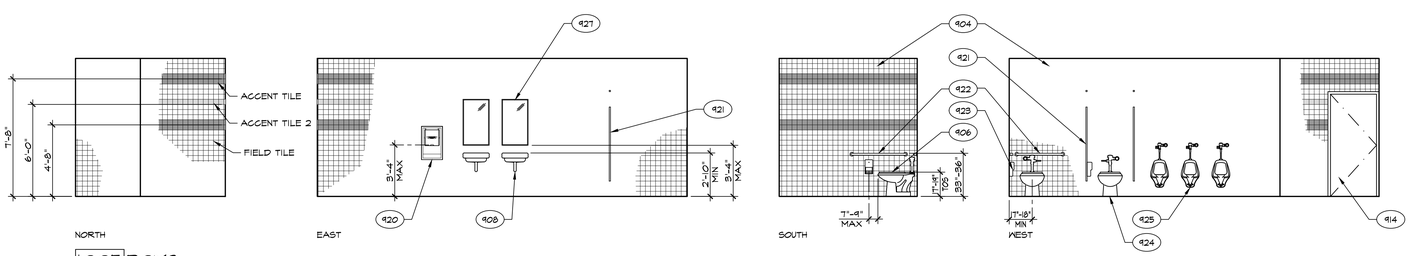

1005 BOYS

KEYNOTES

904	WALL FINISH - SEE ROOM FINISH SCHEDULE	
905	BASE - SEE ROOM FINISH SCHEDULE	
906	REINSTALL (E) TOILET - SEE PLUMBING PLAN	
908	REINSTALL (E) LAVATORY - SEE PLUMBING PLAN	
914	DOOR PER SCHEDULE	- / A5.0
916	WINDOW PER SCHEDULE	- / A5.0
918	8" CMU WALL IN-FILL	25 / A10.1
920	HAND DRYER - SEE SPEC	1 / A10.0; 12 / A10.0
921	SOLID PLASTIC PARTITIONS PER SPEC	7 / A10.0
922	GRAB BAR - SEE SPEC	1 / A10.0; 6 / A10.0; 11 / A10.0
923	RECESSED TOILET PAPER DISPENSER PER SPEC	10 / A10.0
924	TOILET FIXTURE - SEE PLUMBING PLAN	1 / A10.0; 6 / A10.0
925	URINAL & REQUIREMENTS - SEE PLUMBING PLAN	1 / A10.0; 5 / A10.0
927	MIRROR - SEE SPECS	1 / A10.0; 6 / A10.0
938	FIRE EXTINGUISHER	4 / A10.1
939	STAINLESS STEEL WALL CLADDING PER SPEC - SEE FOODSERVICE PLAN	FSD-3A; FSD-3
940	ELECTRICAL PANEL - SEE ELECTRICAL PLAN	
942	HOOD - SEE MECHANICAL PLAN	
943	CORNER GUARD - SEE FOODSERVICE PLAN	
944	WALL GUARD - SEE FOODSERVICE PLAN	

INTERIOR ELEVATIONS

SCALE: 1/4" = 1'-0"

IDENTIFICATION STAMP
DIV. OF THE STATE ARCHITECT
APP: 03-122528 INC:
REVIEWED FOR
SS ☑ FLS ☑ ACS ☑
DATE: 01/06/2025

PTN: 63529-385 FILE: 15-H3

HIGHLAND HIGH SCHOOL
CAFETERIA REHABILITATION AND MODERNIZATION
2900 ROYAL SCOTS WAY
FOR
KERN HIGH SCHOOL DISTRICT
BAKERSFIELD, KERN COUNTY, CALIFORNIA

1601 NEW STINE ROAD, SUITE 280
BAKERSFIELD, CA 93309
PH: (661) 397-4377
FAX: (661) 397-4378
WWW.SCARCHITECT.COM

STEPHEN J. CORBIN, NCARB, AIA, LEED ®-AP

CHECK AND VERIFY ALL DIMENSIONS BEFORE PROCEEDING WITH THE WORK. REPORT DISCREPANCIES TO THE ARCHITECT. ALL CONSTRUCTION SHALL CONFORM TO THE C.B.C.

INTERIOR ELEVATIONS

MARK	DATE	REVISIONS
1		
2		
3		

JOB NO. 1319
DRAWN: ED, FJS
CHECKED: BCW
DATE: 9/25/24

9.1
19 OF 99 SHEETS

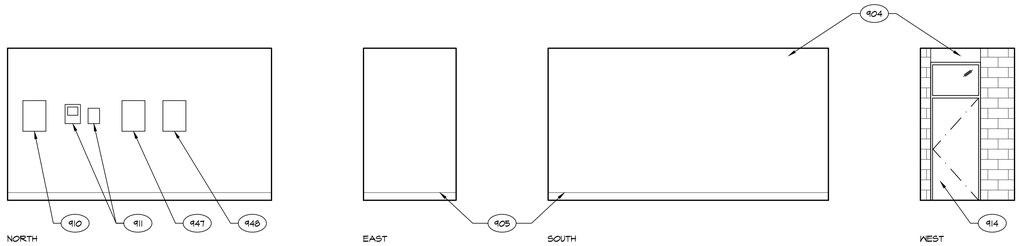

1006 ELECTRICAL

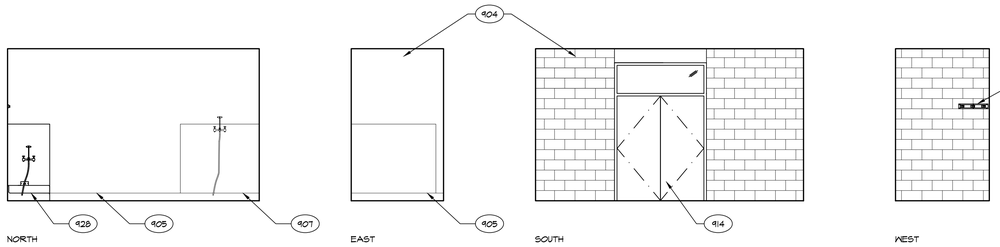

1007 CAN-WASH/JANITOR

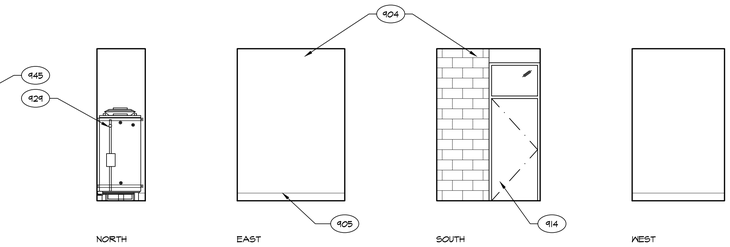

1008 MECHANICAL

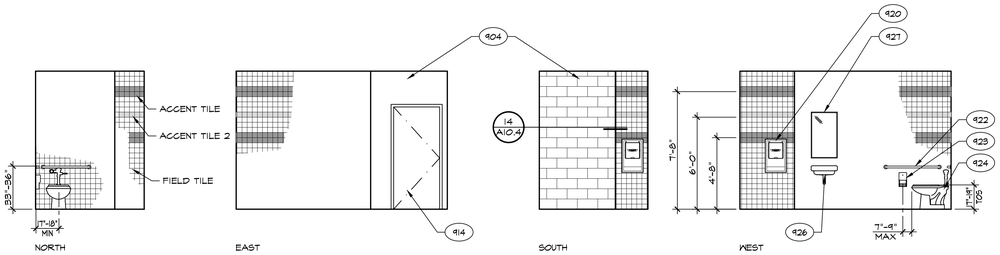

1009 TOILET

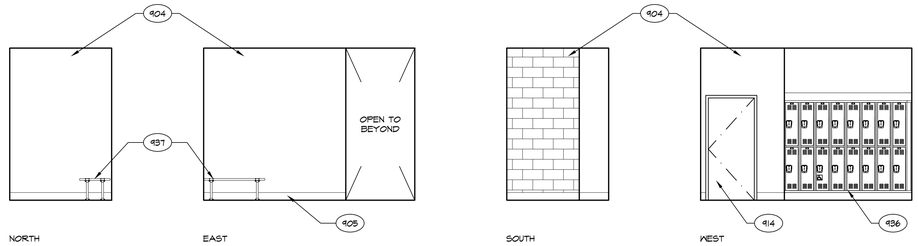

1010 BREAK/LOCKERS

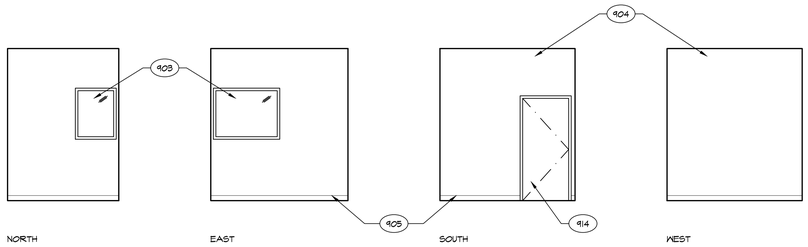

1011 OFFICE

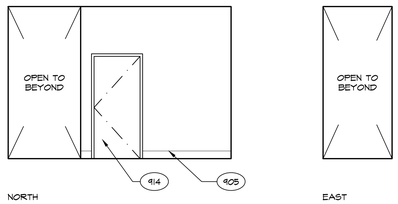

1012 CORRIDOR

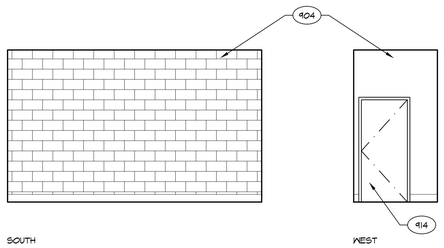

1012 CORRIDOR
CONTINUED

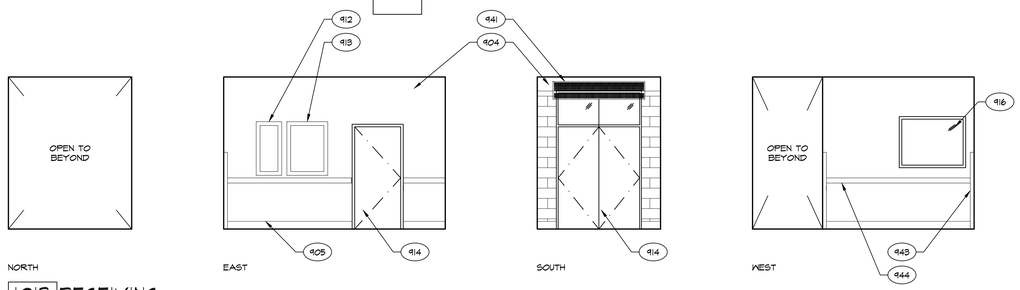

1013 RECEIVING

KEYNOTES

403	(E) STOREFRONT SYSTEM ALUMINUM FRAME, PROVIDE DUAL GLAZING PER SPEC	8 A10.0
404	WALL FINISH - SEE ROOM FINISH SCHEDULE	
405	BASE - SEE ROOM FINISH SCHEDULE	
407	(E) LAVATORY/SINK/FLOOR SINK	
410	(E) HVAC SELECTOR PANEL	
411	(E) HVAC TIME CLOCK & TIMER	
412	(E) SIGNAL TERMINAL CABINET - SEE ELECTRICAL PLAN	
413	(E) PUBLIC TELEPHONE TERMINAL CABINET	
414	DOOR PER SCHEDULE	- A5.0
420	HAND DRYER - SEE SPEC	A10.0 12 A10.0
422	GRAB BAR - SEE SPEC	1 A10.0 6 A10.0 11 A10.0
423	RECESSED TOILET PAPER DISPENSER PER SPEC	10 A10.0
424	TOILET FIXTURE - SEE PLUMBING PLAN	1 A10.0 6 A10.0
426	LAVATORY/SINK & REQUIREMENTS - SEE PLUMBING PLAN PROVIDE & INSTALL INSULATE WRAPS @ ALL "P" TRAPS - SEE MECHANICAL	5 A10.0
427	MIRROR - SEE SPECS	A10.0 6 A10.0
428	FLOOR SINK - SEE PLUMBING PLAN	
429	WATER HEATER - SEE PLUMBING PLAN	
936	LOCKERS ON 6" CONC BASE - SEE SPECS	24 A10.0
937	ADA BENCH	16 A10.0
941	AIR CURTAIN - SEE FOODSERVICE PLAN	
943	CORNER GUARD - SEE FOODSERVICE PLAN	
944	WALL GUARD - SEE FOODSERVICE PLAN	
945	MOP HOLDER - SEE FOODSERVICE PLAN	
947	FIRE ALARM CONTROL PANEL - SEE ELECTRICAL PLAN	
948	VOICE EVAC - SEE ELECTRICAL PLAN	

INTERIOR ELEVATIONS

SCALE: 1/4" = 1'-0"

IDENTIFICATION STAMP
DIV. OF THE STATE ARCHITECT
APP: 03-122528 INC:
REVIEWED FOR
SS ☑ FLS ☑ ACS ☑
DATE: 01/06/2025

PTN: 63529-385 FILE: 15-H3

HIGHLAND HIGH SCHOOL
CAFETERIA REHABILITATION AND MODERNIZATION
2900 ROYAL SCOTS WAY
FOR
KERN HIGH SCHOOL DISTRICT
BAKERSFIELD, KERN COUNTY, CALIFORNIA

ARCHITECT inc.
1601 NEW STINE ROAD, SUITE 280
BAKERSFIELD, CA 93309
PH: (661) 397-4377
FAX: (661) 397-4378
WWW.SCARCHITECT.COM

LICENSED ARCHITECT STEPHEN J. CORBIN No. C-16789 Exp. 12/31/24 STATE OF CALIFORNIA

STEPHEN J. CORBIN, NCARB, AIA, LEED ®-AP

CHECK AND VERIFY ALL DIMENSIONS BEFORE PROCEEDING WITH THE WORK. REPORT DISCREPANCIES TO THE ARCHITECT. ALL CONSTRUCTION SHALL CONFORM TO THE C.B.C.

KERN HIGH SCHOOL DISTRICT
Tradition of Excellence
Est. 1893

INTERIOR ELEVATIONS

MARK	DATE	REVISIONS
1		
2		
3		

JOB NO. 1319
DRAWN: ED, FJS
CHECKED: BCW
DATE: 9/25/24

9.2
20 OF 99 SHEETS

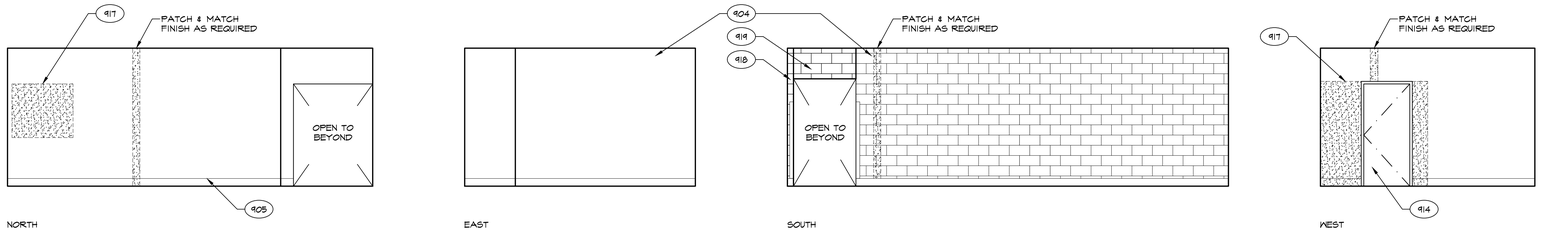

1014 DRY STORAGE

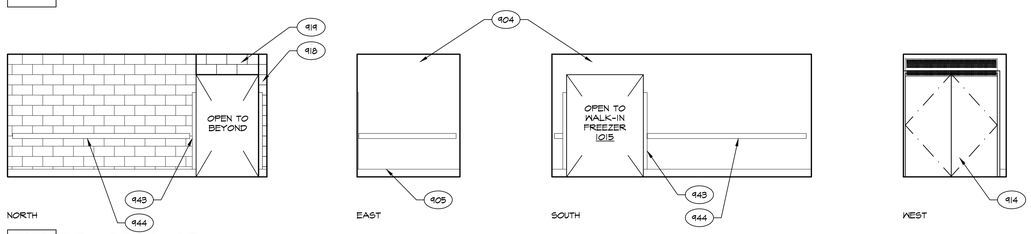

1015 DRY STORAGE

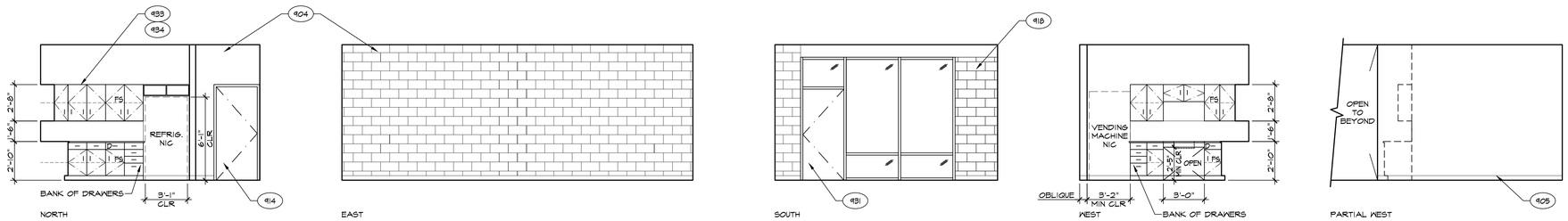

1016 FACULTY LOUNGE

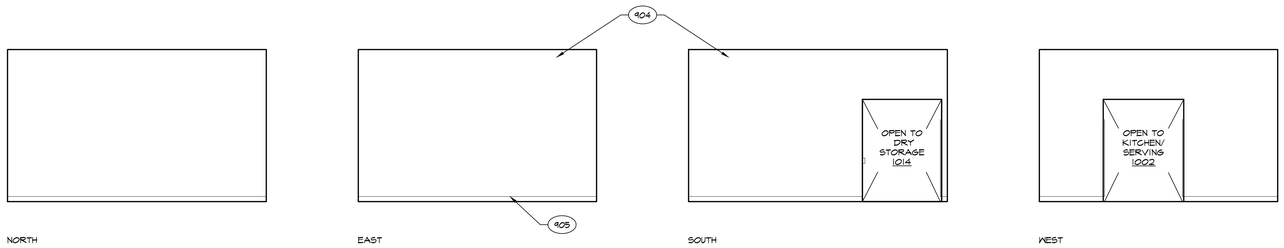

1017 WALK-IN COOLER

INTERIOR ELEVATIONS

SCALE: 1/4" = 1'-0"

KEYNOTES

904	WALL FINISH - SEE ROOM FINISH SCHEDULE	
905	BASE - SEE ROOM FINISH SCHEDULE	
914	DOOR PER SCHEDULE	- A5.0
917	WALL IN-FILL	11 A10.1
918	8" CMU WALL IN-FILL	25 A10.1
919	8" CMU HEADER ABOVE	26 A10.1
931	ALUMINUM STOREFRONT SYSTEM	
933	PLAM BASE CABS AND/OR UPPER CABS	11 A10.3
934	SOLID SURFACE COUNTERTOP AND SPLASH	
943	CORNER GUARD - SEE FOODSERVICE PLAN	
944	WALL GUARD - SEE FOODSERVICE PLAN	

IDENTIFICATION STAMP
DIV. OF THE STATE ARCHITECT
APP: 03-122528 INC:
REVIEWED FOR
SS ☑ FLS ☑ ACS ☑
DATE: 01/06/2025

PTN: 63529-385 FILE: 15-H3

HIGHLAND HIGH SCHOOL
CAFETERIA REHABILITATION AND MODERNIZATION
2900 ROYAL SCOTS WAY
FOR
KERN HIGH SCHOOL DISTRICT
BAKERSFIELD, KERN COUNTY, CALIFORNIA

1601 NEW STINE ROAD, SUITE 280
BAKERSFIELD, CA 93309
PH: (661) 397-4377
FAX: (661) 397-4378
WWW.SCARCHITECT.COM

STEPHEN J. CORBIN, NCARB, AIA, LEED ®-AP

CHECK AND VERIFY ALL DIMENSIONS BEFORE PROCEEDING WITH THE WORK. REPORT DISCREPANCIES TO THE ARCHITECT. ALL CONSTRUCTION SHALL CONFORM TO THE C.B.C.

INTERIOR ELEVATIONS

MARK	DATE	REVISIONS
1		
2		
3		

JOB NO. 1319
DRAWN: ED, FJS
CHECKED: BCW
DATE: 9/25/24

9.3
21 OF 99 SHEETS

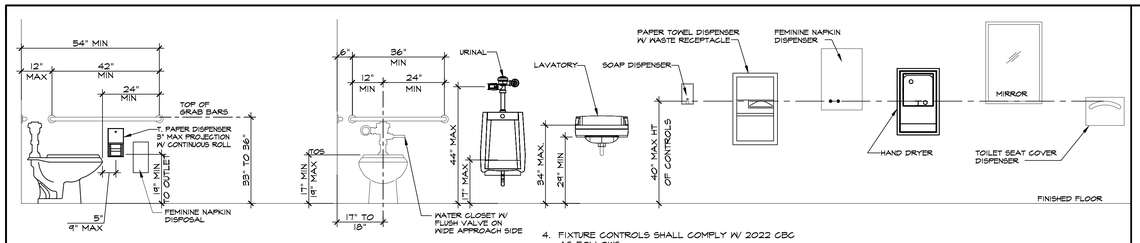

NOTE:

1. FOR ALL ACCESSORIES THAT BLOCKING IS REQUIRED (4 / A10.0)
2. WATER CLOSET W/ FLUSH VALVE ON WIDE SIDE OF TOILET STALL.
3. THE FIXTURES AND ACCESSORIES SHOWN HEREIN ARE NOT NECESSARILY INCLUDED IN THIS PROJECT. REFER TO PLANS AND SPECIFICATIONS FOR FIXTURE OR ACCESSORY TYPE AND LOCATIONS.
4. FIXTURE CONTROLS SHALL COMPLY W/ 2022 CBC AS FOLLOWS ;
   LAVATORIES = 11B-309 AND 11B-606.4
   WATER CLOSETS = 11B-604.9.5
   URINALS = 11B-605.4
5. THE SPACE BETWEEN THE GRAB BAR AND PROJECTING OBJECT BELOW AND AT THE ENDS SHALL BE ½" MIN. THE SPACE BETWEEN THE GRAB BAR AND PROJECTING OBJECTS ABOVE SHALL BE 12" MIN.

1 TYPICAL TOILET ACCESSORIES MOUNTING HEIGHTS

SCALE: ½" = 1'-0"

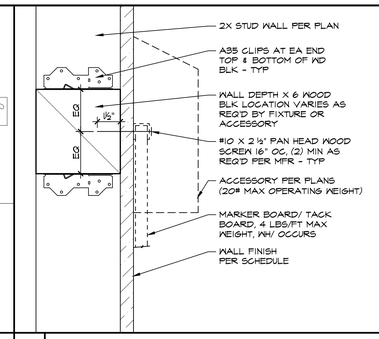

4 ACCESSORY MOUNTING

SCALE: 3" = 1'-0"

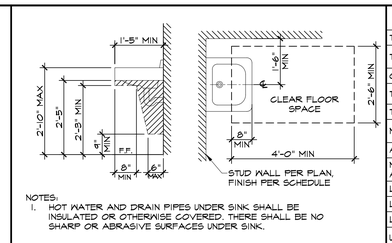

NOTES:

1. HOT WATER AND DRAIN PIPES UNDER SINK SHALL BE INSULATED OR OTHERWISE COVERED. THERE SHALL BE NO SHARP OR ABRASIVE SURFACES UNDER SINK.
2. FOR ACCESSORY MOUNTING HEIGHTS SEE DIMENSION REQUIREMENTS SEE DTL (6 / A10.0)
3. SOLID BLOCKING AS REQUIRED PER FIXTURE SEE DTL (4 / A10.0)

5 LAVATORY REQUIREMENTS

SCALE: ½" = 1'-0"

DESCRIPTION	ADULT (INCHES)
TOILET CENTERING FROM WALL	17"-18"
TOILET SEAT HEIGHT FF TO TOP OF SEAT	17"-19"
GRAB BAR HEIGHT TO TOP OF RAIL	33"-36"
TOILET PAPER IN FRONT OF TOILET	7"-9" MAX
TOILET PAPER DISPENSER HEIGHT	19" MIN
NAPKIN DISPOSAL IN FRONT OF TOILET	12" MAX
ACCESSORIES, DISPENSER CONTROLS	40" MAX
MAX HT OF MIRROR'S BOT REFLECTIVE SURFACE ABOVE FINISH FLOOR	35" WALL MTD 40" @ COUNTER
LAVATORY/SINK TOP HEIGHT	34" MAX
LAVATORY/SINK KNEE CLEARANCE	27" MIN
LAVATORY/SINK DEPTH	6½" MAX
URINAL LIP HEIGHT	17" MAX
URINAL FLUSH HANDLE HEIGHT	44" MAX
DRINKING FOUNTAIN BUBBLER HEIGHT	36" MAX, 38"-43" FOR STANDING PERSONS
DRINKING FOUNTAIN KNEE CLEARANCE	27" MIN
RAMP/STAIR HANDRAIL HEIGHT TO TOP OF RAIL	34"-38" MAX

6 DIMENSION REQUIREMENTS

SCALE: NTS

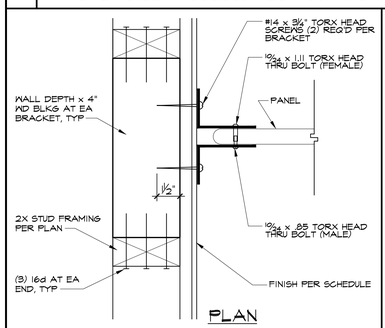

PLAN

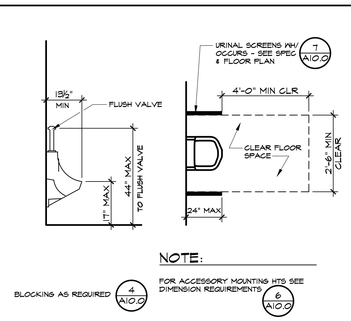

NOTE:

FOR ACCESSORY MOUNTING HTS SEE DIMENSION REQUIREMENTS (6 / A10.0)

NOTE:

FAUCET CONTROLS AND OPENING MECHANISMS SHALL BE OPERABLE WITH ONE HAND AND SHALL NOT REQUIRE TIGHT GRASPING, PINCHING OR TWISTING OF THE WRIST. THE FORCE REQUIRED TO ACTIVATE CONTROLS SHALL BE NO MORE THAN 5 LBS. LEVER OPERATED, PUSH TYPE AND SELF-CLOSING VALVES TO REMAIN OPEN FOR AT LEAST TEN SECONDS. SINKS SHALL NOT EXCEED 6½" IN DEPTH PER 2022 CBC 11B-606.3

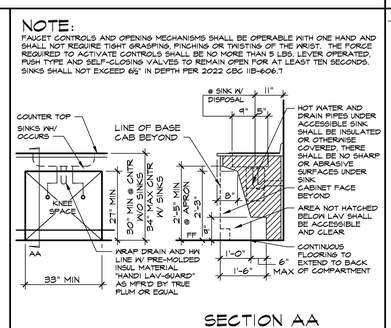

SECTION AA

7 TOILET PARTITION

SCALE: 3" = 1'-0"

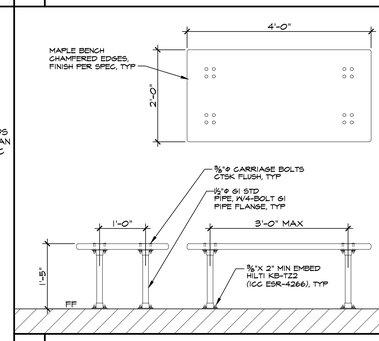

10 TP DISPENSER DETAIL

SCALE: 3" = 1'-0"

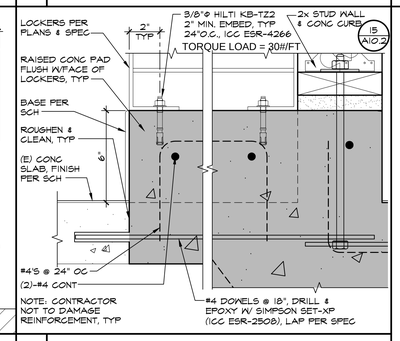

11 GRAB BAR MOUNTING

SCALE: 6" = 1'-0"

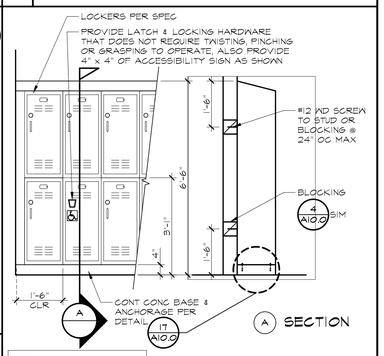

LOCKERS - ELEVATION & SECTION

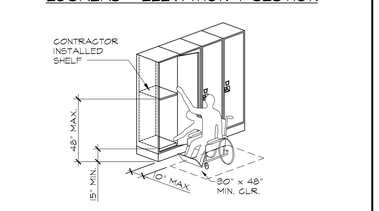

LOCKERS - ISO VIEW

12 SEMI-RECESSED HAND DRYER

SCALE: ½" = 1'-0"

NOTE:

1. FOR ACCESSIBLE HAND DRYER MOUNTING HEIGHTS & LOCATION SEE DETAILS (1 / A10.0) (6 / A10.0)

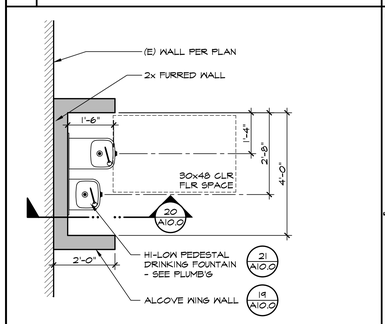

13 DF REQUIREMENTS

SCALE: ½" = 1'-0"

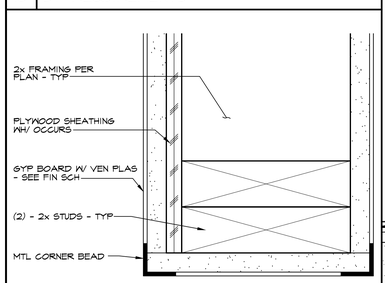

19 ALCOVE WING WALL

SCALE: 6" = 1'-0"

NOTES:

1. FOR ACCESSORY MOUNTING HEIGHTS, SEE DIMENSION REQUIREMENTS
2. FOR PROPER INSTALLATION, SEE MANUFACTURER & SPEC
3. FOR ACCESSORY MOUNTING HEIGHTS, SEE DETAIL 6/A10.0 DIMENSION REQUIREMENTS
4. ALL WOOD STUDS IN CONTACT W/ MASONRY OR CONCRETE SHALL BE PTDF - TYP

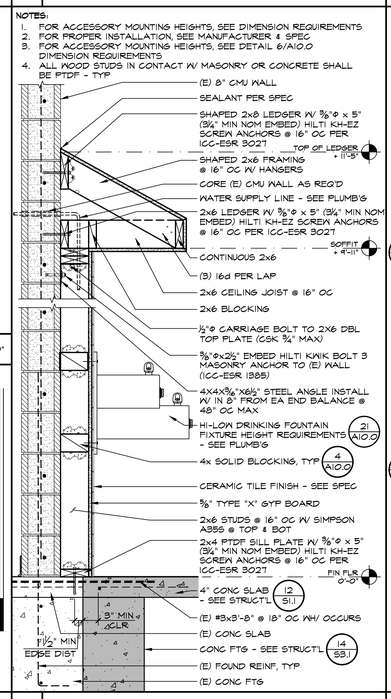

20 DUAL HEIGHT DF ALCOVE FRMG

SCALE: 1" = 1'-0"

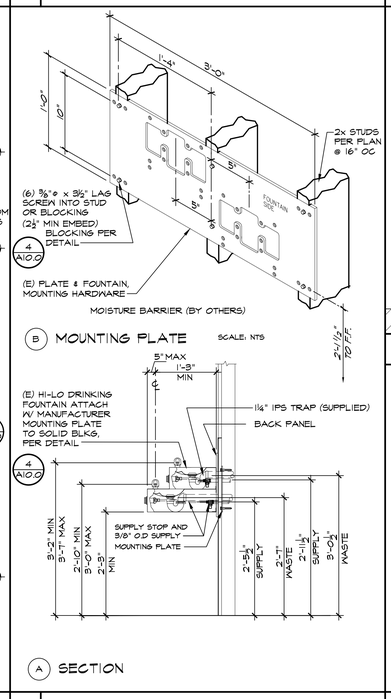

(B) MOUNTING PLATE SCALE: NTS

(A) SECTION

9 KNEE SPACE REQUIREMENTS

SCALE: ½" = 1'-0"

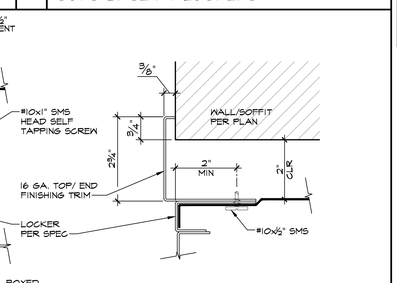

22 LOCKER CLOSURE/PANEL INFILL

SCALE: 6" = 1'-0"

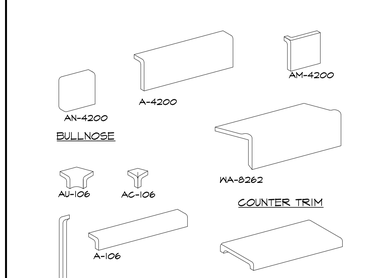

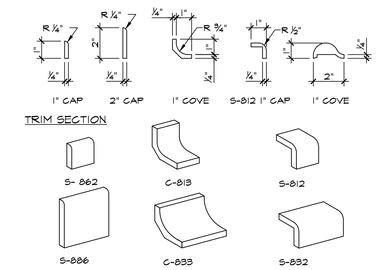

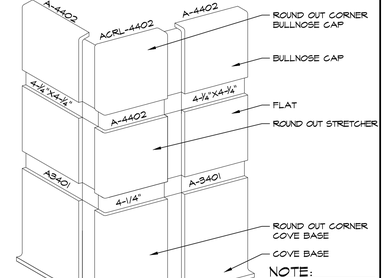

NOTE:

NUMBER INDICATED BY DALTILE

25 TRIM SECTIONS & STRETCHERS

SCALE: 3" = 1'-0"

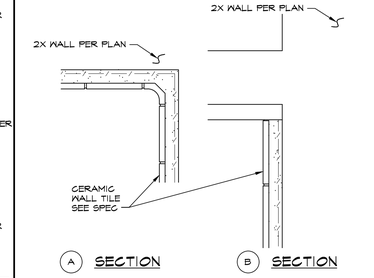

NOTE:

FOR ADDITIONAL TILE TRIM PIECES TO BE USED (25 / A10.0)

28 CERAMIC TILE

SCALE: 3" = 1'-0"

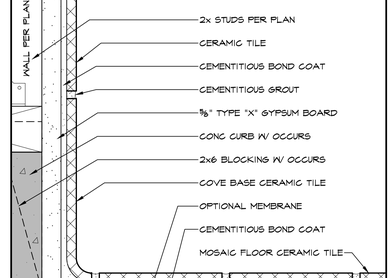

29 WALL AND FLOOR TILE

SCALE: 6" = 1'-0"

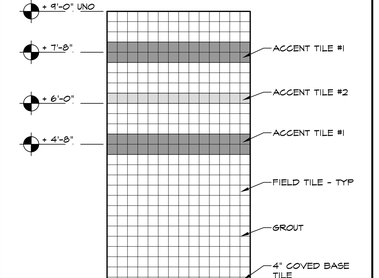

NOTE:

TILE AND GROUT COLORS TO BE SELECTED BY ARCHITECT.

30 WALL TILE DETAIL

SCALE: ½" = 1'-0"

IDENTIFICATION STAMP
DIV. OF THE STATE ARCHITECT
APP: 03-122528 INC:
REVIEWED FOR
SS ☑ FLS ☑ ACS ☑
DATE: 01/06/2025

PTN : 63529-385 FILE: 15-H3

HIGHLAND HIGH SCHOOL

CAFETERIA REHABILITATION AND MODERNIZATION
2900 ROYAL SCOTS WAY
FOR
KERN HIGH SCHOOL DISTRICT
BAKERSFIELD, KERN COUNTY, CALIFORNIA

ARCHITECT SCR inc.
1601 NEW STINE ROAD, SUITE 280
BAKERSFIELD, CA 93309
PH: (661) 397-4377
FAX: (661) 397-4378
WWW.SCARCHITECT.COM

LICENSED ARCHITECT STEPHEN J. CORBIN No. C-16794 Exp. 11/30/25 STATE OF CALIFORNIA

STEPHEN J. CORBIN, NCARB, AIA, LEED ®-AP

CHECK AND VERIFY ALL DIMENSIONS BEFORE PROCEEDING WITH THE WORK. REPORT DISCREPANCIES TO THE ARCHITECT. ALL CONSTRUCTION SHALL CONFORM TO THE C.B.C.

KERN HIGH SCHOOL DISTRICT — Tradition of Excellence — EST. 1893

DETAILS

MARK	DATE	REVISIONS
1		
2		
3		

JOB NO. 1319
DRAWN : ED, FJS
CHECKED : BCW
DATE : 9/25/24

10.0
22 OF 99 SHEETS

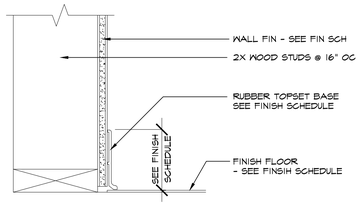

1 RUBBER TOPSET BASE SCALE : 3" = 1'-0"

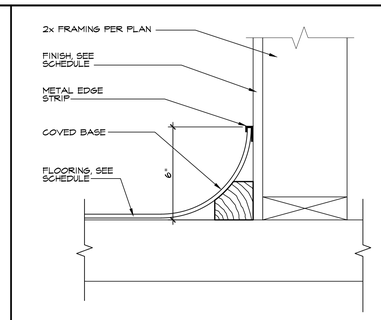

2 COVED SHEET VINYL SCALE : 3" = 1'-0"

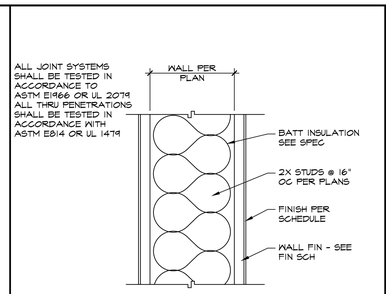

3 WALL ASSEMBLY SCALE: 3" = 1'-0"

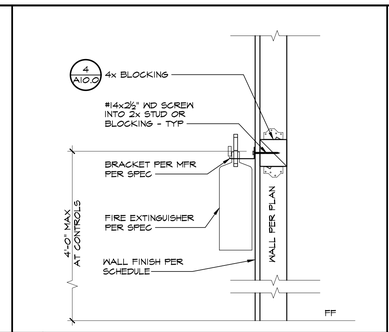

4 FIRE EXTINGUISHER MOUNTING SCALE: NTS

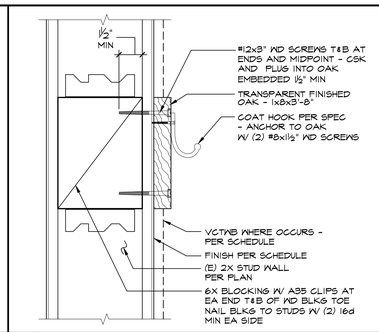

5 COAT HOOK SCALE: 3" = 1'-0"

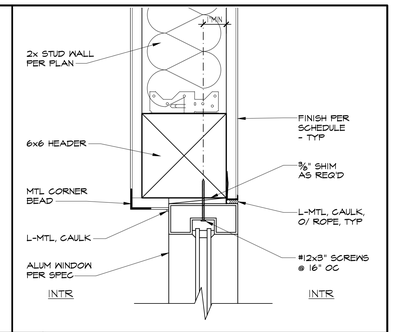

6 FIXED INT WINDOW HEAD SCALE: 3" = 1'-0"

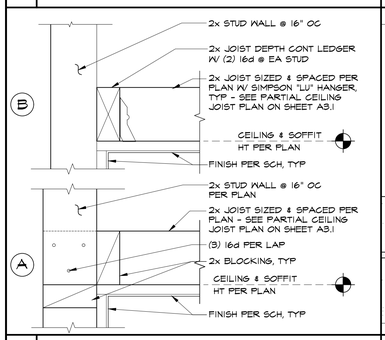

7 CEILING JOIST TO STUD WALL SCALE: 3" = 1'-0"

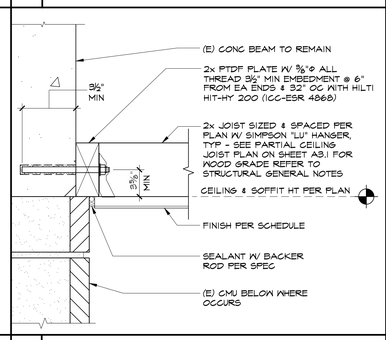

8 LEDGER TO (E) CONC BEAM SCALE: 3" = 1'-0"

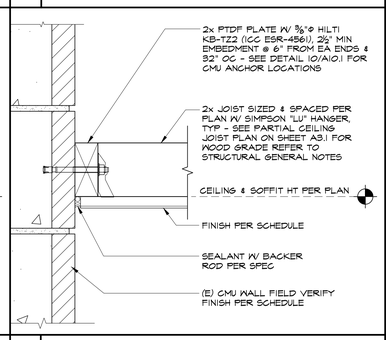

9 LEDGER TO CMU WALL SCALE: 3" = 1'-0"

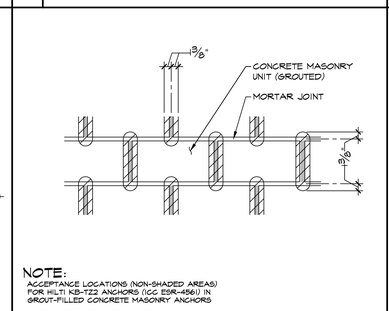

NOTE:
ACCEPTANCE LOCATIONS (NON-SHADED AREAS) FOR HILTI KB-TZ2 ANCHORS (ICC ESR-4561) IN GROUT-FILLED CONCRETE MASONRY ANCHORS

10 CMU ANCHOR LOCATIONS SCALE: 1" = 1'-0"

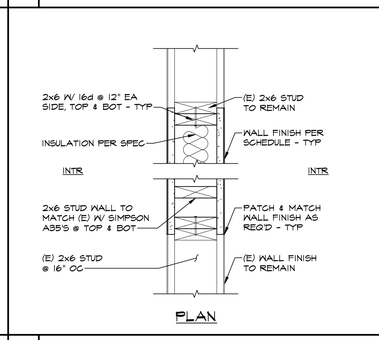

11 STUD WALL OPENING IN-FILL SCALE: ½" = 1'-0"

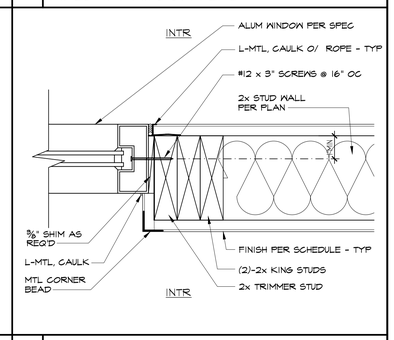

12 FIXED INT WINDOW JAMB SCALE: 3" = 1'-0"

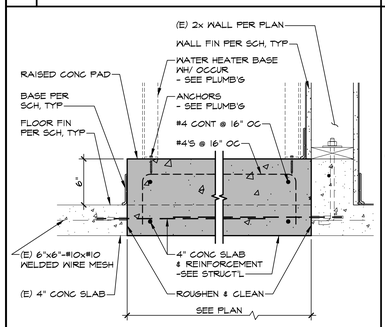

13 RAISED CONC PAD SCALE: ½" = 1'-0"

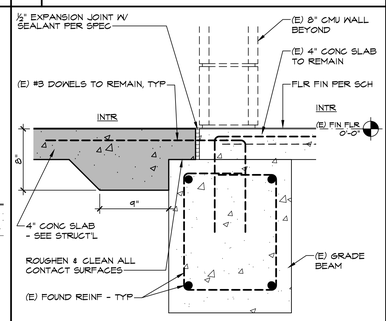

14 CONC SLAB @ OPENING SCALE: ½" = 1'-0"

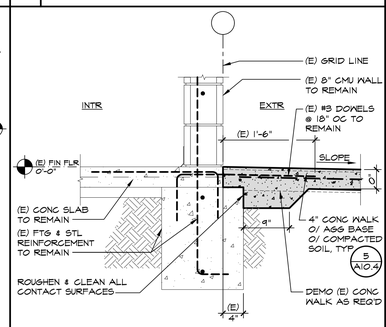

15 CONC WALK ADJ TO (E) BLDG SCALE: 1" = 1'-0"

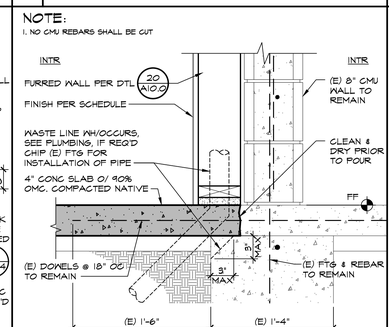

16 CONC SLAB TO (E) FOUNDATION SCALE: 1½" = 1'-0"

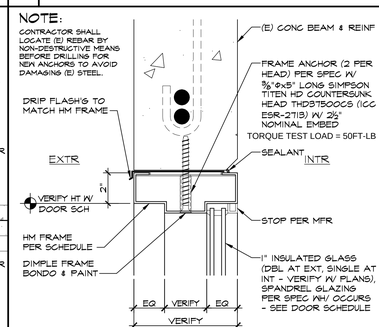

17 HM TRANSOM SCALE: 3" = 1'-0"

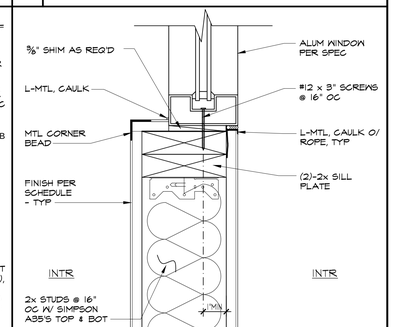

18 FIXED INT WINDOW SILL SCALE: 3" = 1'-0"

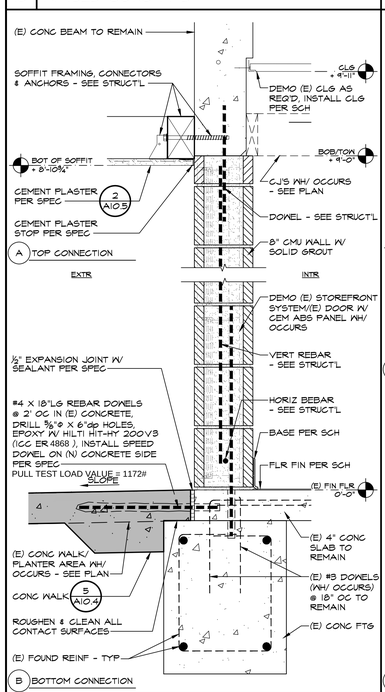

25 EXT. CMU WALL IN-FILL SCALE: ½" = 1'-0"

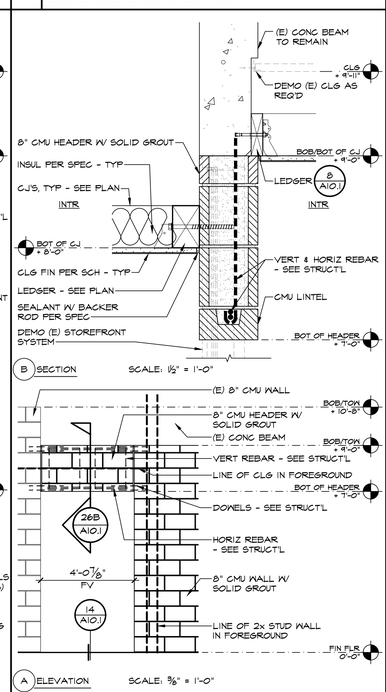

26 CMU HEADER SCALE: AS NOTED

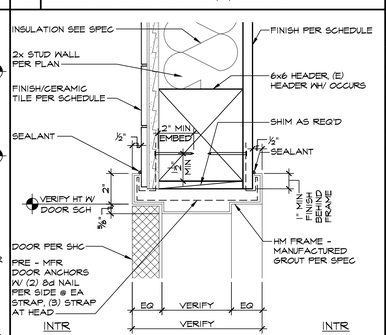

21 HM DOOR HEAD SCALE: 3" = 1'-0"

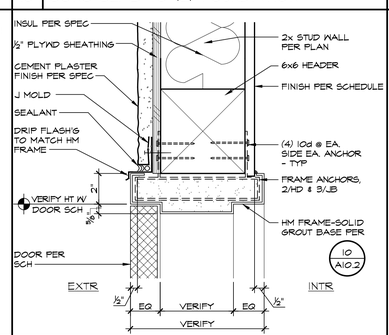

22 HM DOOR HEAD SCALE: 3" = 1'-0"

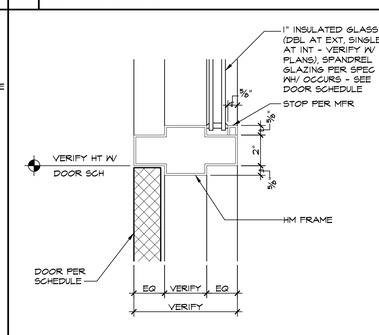

23 HM TRANSOM SCALE: 3" = 1'-0"

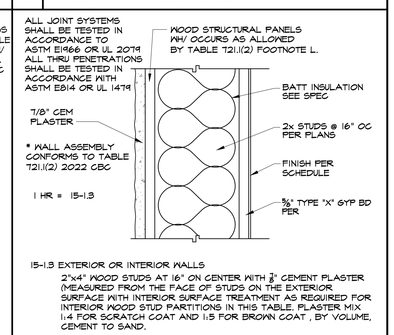

24 (1) HOUR WALL ASSEMBLY SCALE : 3" = 1'-0"

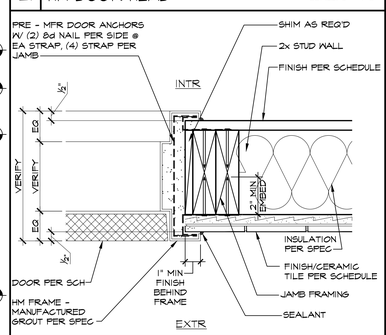

27 HM DOOR JAMB SCALE: 3" = 1'-0"

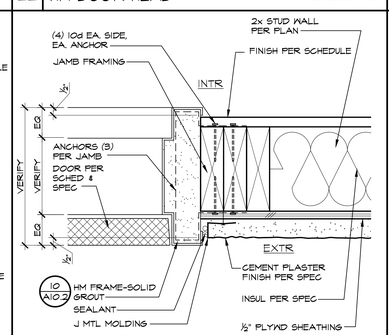

28 HM DOOR JAMB SCALE: 3" = 1'-0"

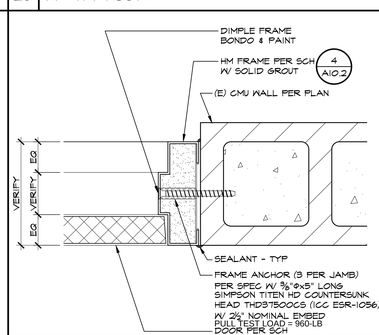

29 HM DOOR JAMB SCALE: 3" = 1'-0"

30 NOT USED SCALE:

IDENTIFICATION STAMP
DIV. OF THE STATE ARCHITECT
APP: 03-122528 INC:
REVIEWED FOR
SS ☑ FLS ☑ ACS ☑
DATE: 01/06/2025

PTN : 63529-385 FILE: 15-H3

HIGHLAND HIGH SCHOOL
CAFETERIA REHABILITATION AND MODERNIZATION
2900 ROYAL SCOTS WAY
FOR
KERN HIGH SCHOOL DISTRICT
BAKERSFIELD, KERN COUNTY, CALIFORNIA

ARCHITECT SCA inc.
1601 NEW STINE ROAD, SUITE 280
BAKERSFIELD, CA 93309
PH: (661) 397-4377
FAX: (661) 397-4378
WWW.SCARCHITECT.COM
LICENSED ARCHITECT STEPHEN J. CORBIN No. C-16784 Exp. 12/31/24 STATE OF CALIFORNIA
STEPHEN J. CORBIN, NCARB, AIA, LEED ®-AP

CHECK AND VERIFY ALL DIMENSIONS BEFORE PROCEEDING WITH THE WORK. REPORT DISCREPANCIES TO THE ARCHITECT. ALL CONSTRUCTION SHALL CONFORM TO THE C.B.C.

KERN HIGH SCHOOL DISTRICT — Tradition of Excellence — EST. 1893

DETAILS

MARK	DATE	REVISIONS
1		
2		
3		

JOB NO. 1319
DRAWN : ED, FJS
CHECKED : BCW
DATE : 9/25/24

10.1
23 OF 99 SHEETS

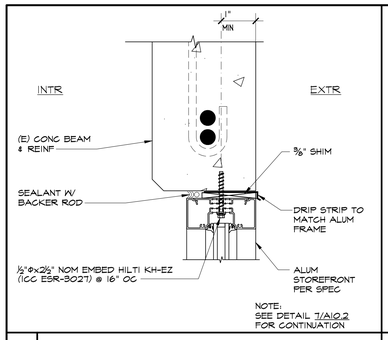

1 STOREFRONT HEAD SCALE: 3" = 1'-0"

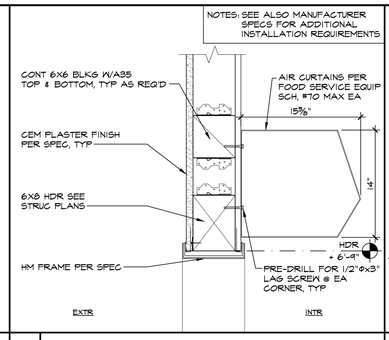

2 AIR CURTAIN @ WD STUD WALL SCALE: 1½" = 1'-0"

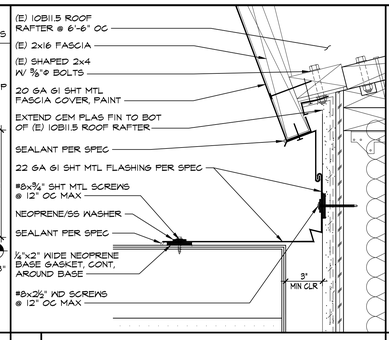

3 SHEET METAL FLASHING @ FASCIA SCALE: 3" = 1'-0"

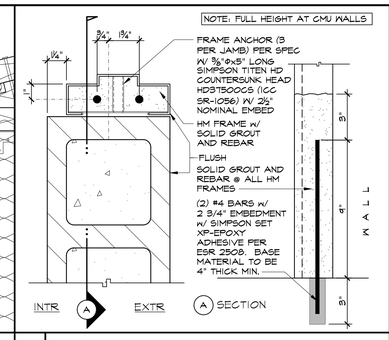

4 GROUTED HM JAMB SCALE: 3" = 1'-0"

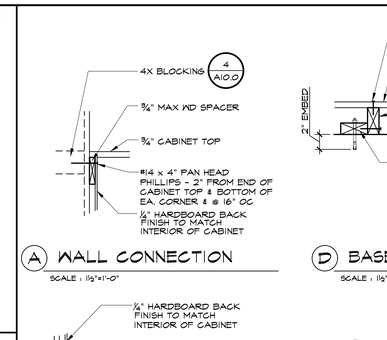

ADDITIONAL NOTES:

CABINET ANCHORAGE

- VERTICAL LOAD REQUIREMENT PER: TABLE 16OT A1 CBC (PART 2 VOLUME 2, TITLE 24 OCR)
- LATERAL LOAD REQUIREMENT PER: ASCE 7-16 CHAPTER 13, TABLE 13.5-1

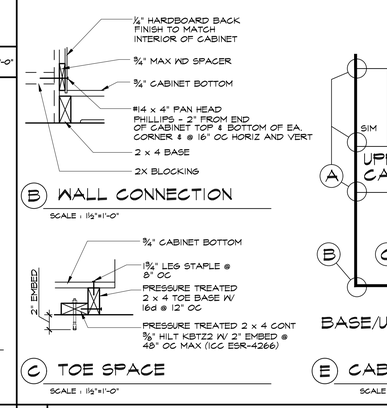

7 STOREFRONT JAMB SCALE: 3" = 1'-0"

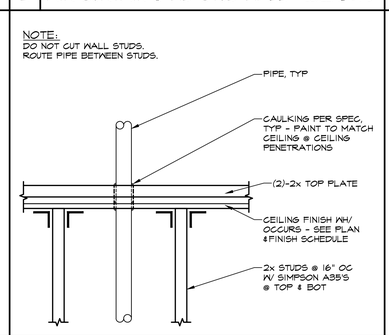

8 TYP WALL/CEILING PIPE PENETRATION SCALE: 1½" = 1'-0"

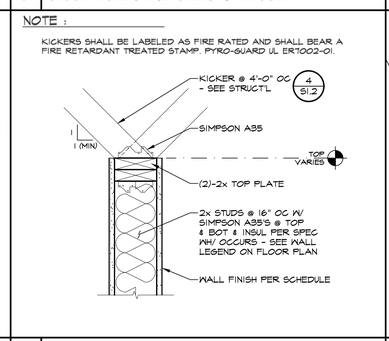

9 STUD WALL TOP CONNECTION SCALE: 1½" = 1'-0"

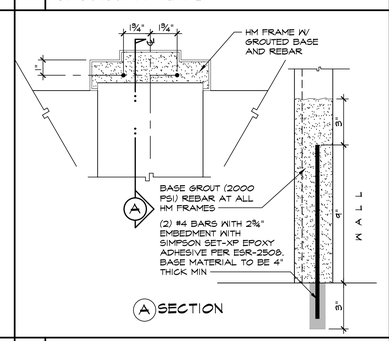

10 GROUTED HM JAMB SCALE: 3" = 1'-0"

11 TYPICAL CABINET ATTACHMENTS SCALE: AS NOTED

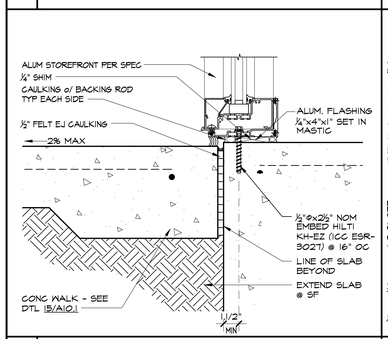

13 STOREFRONT SILL SCALE: 3" = 1'-0"

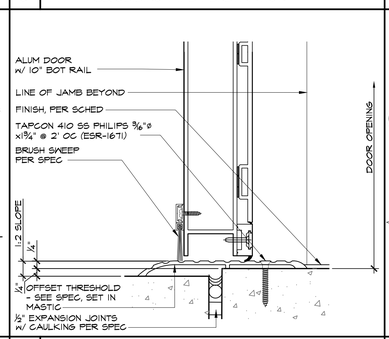

14 STOREFRONT THRESHOLD SCALE: 6" = 1'-0"

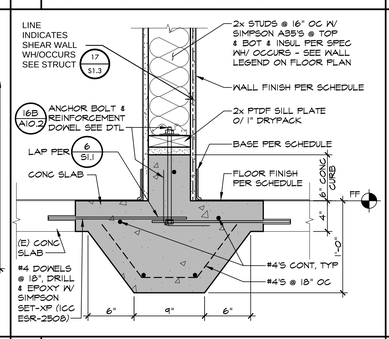

15 INTERIOR CONC CURB SCALE: 1½" = 1'-0"

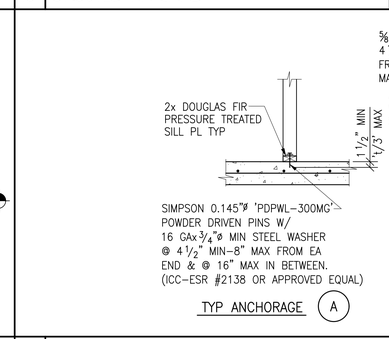

16 NON-BEARING PARTITION ANCHORAGE AT SILL SCALE: ¾" = 1'-0"

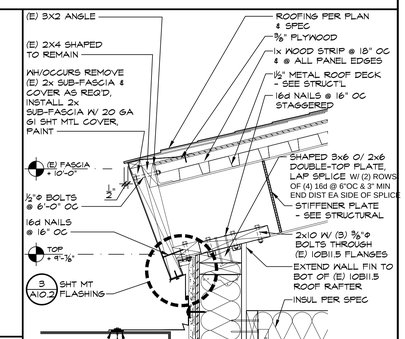

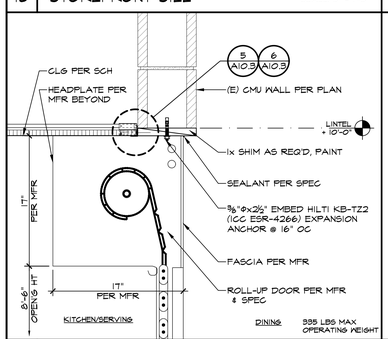

19 ROLL-UP DOOR ATTACHMENT SCALE: 1½" = 1'-0"

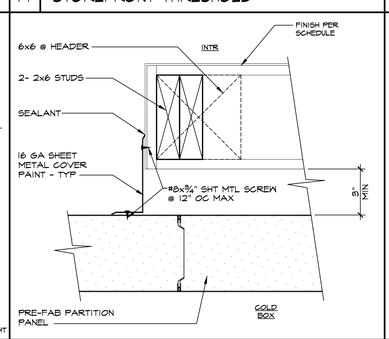

20 JAMB / HEADER SIM SCALE: 3" = 1'-0"

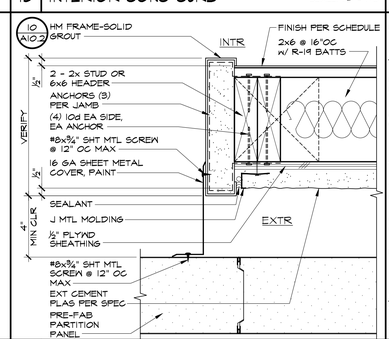

21 DOOR JAMB/HEAD CLOSURE SCALE: 3" = 1'-0"

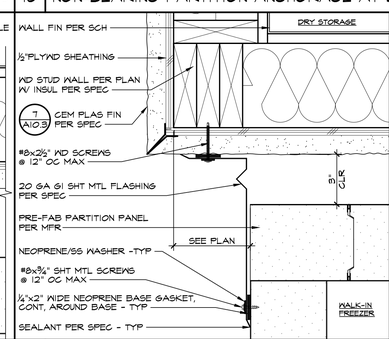

22 CLOSURE SCALE: 3" = 1'-0"

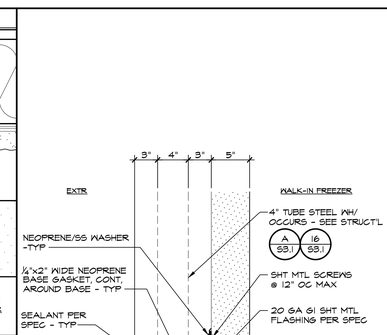

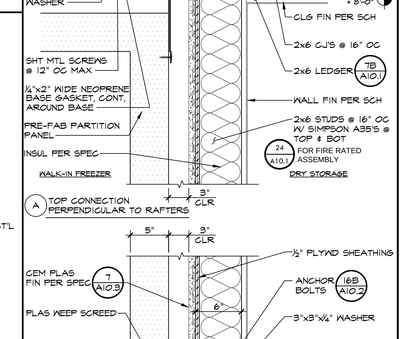

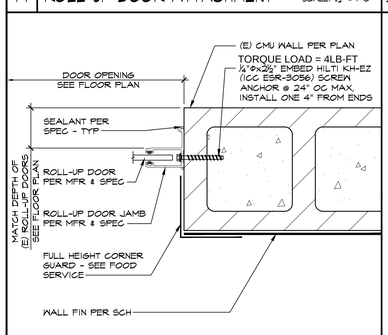

25 ROLL-UP DOOR JAMB SCALE: 3" = 1'-0"

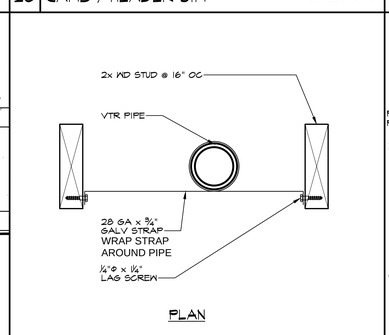

26 VTR PIPE SUPPORT SCALE: 3" = 1'-0"

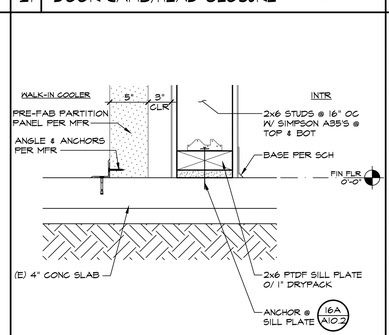

27 COOLER @ (E) FLOOR SLAB SCALE: 1½" = 1'-0"

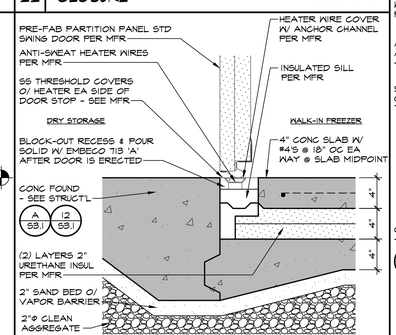

28 INSUL FLOOR THRESHOLD SCALE: 1½" = 1'-0"

29 INSUL FLOOR SLAB SCALE: 1½" = 1'-0"

30 WALK-IN-FREEZER @ EXTR WALL SCALE: 1½" = 1'-0"

IDENTIFICATION STAMP
DIV. OF THE STATE ARCHITECT
APP: 03-122528 INC:
REVIEWED FOR
SS ☑ FLS ☑ ACS ☑
DATE: 01/06/2025

PTN : 63529-385 FILE: 15-H3

HIGHLAND HIGH SCHOOL

CAFETERIA REHABILITATION AND MODERNIZATION
2900 ROYAL SCOTS WAY
FOR
KERN HIGH SCHOOL DISTRICT
BAKERSFIELD, KERN COUNTY, CALIFORNIA

ARCHITECT inc
1601 NEW STINE ROAD, SUITE 280
BAKERSFIELD, CA 93309
PH: (661) 397-4377
FAX: (661) 397-4378
WWW.SCARCHITECT.COM

LICENSED ARCHITECT STEPHEN J. CORBIN C-17678 CALIFORNIA

STEPHEN J. CORBIN, NCARB, AIA, LEED ®-AP

CHECK AND VERIFY ALL DIMENSIONS BEFORE PROCEEDING WITH THE WORK. REPORT DISCREPANCIES TO THE ARCHITECT. ALL CONSTRUCTION SHALL CONFORM TO THE C.B.C.

KERN HIGH SCHOOL DISTRICT — Tradition of Excellence — Est. 1893

DETAILS

MARK	DATE	REVISIONS
1		
2		
3		

JOB NO. 1319
DRAWN: ED, FJS
CHECKED: BCW
DATE: 9/25/24

10.2
24 OF 99 SHEETS

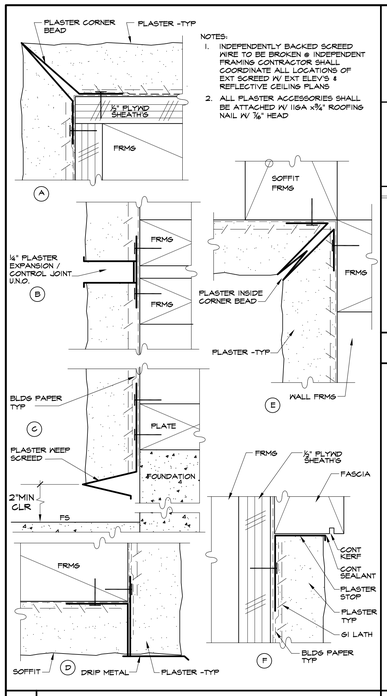

NOTES:
1. INDEPENDENTLY BACKED SCREED WIRE TO BE BROKEN @ INDEPENDENT FRAMING CONTRACTOR SHALL COORDINATE ALL LOCATIONS OF EXT SCREED W/ EXT ELEV'S & REFLECTIVE CEILING PLANS
2. ALL PLASTER ACCESSORIES SHALL BE ATTACHED W/ 16GA x¾" ROOFING NAIL W/ ⅜" HEAD

7 PLASTER / ACCESSORIES SCALE: NTS

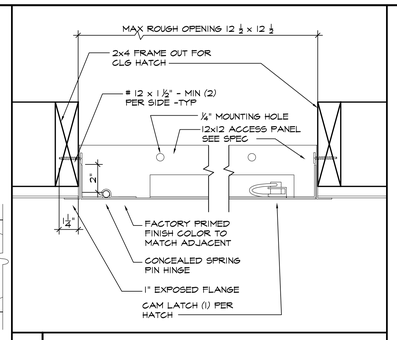

2 ATTIC ACCESS PANEL SCALE: NTS

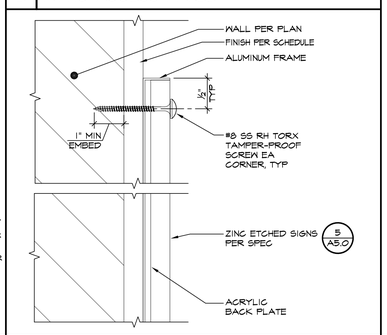

8 SIGN ATTACHMENT SCALE: 6"= 1'-0"

ALLOWABLE SPAN FOR VERTICAL C-BRACE

COMPRESSION STRUT CHANNEL SECTION	MAXIMUM LENGTH "H"
250S125-33	5'-10"
250S137-33	6'-10"
362S137-33	8'-10"
250S137-43	8'-10"
400S137-43	10'-10"

NOTES:
1. MIN F_y = 33 KSI
2. WHEN USING BRACE, DO NOT SPLICE
3. $\frac{KL}{r}$ >200 FOR COMPRESSION STRUTS, SEE TABLE ABOVE

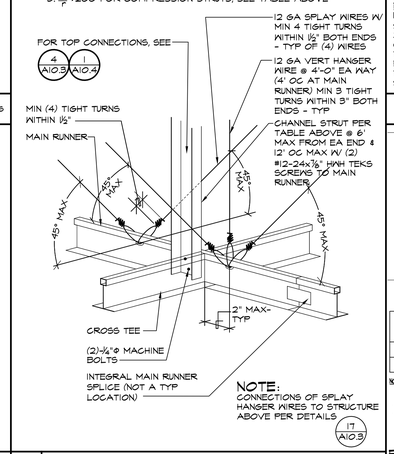

9 T-BAR GRID SCALE: NTS

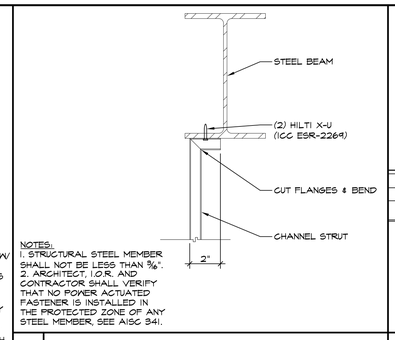

NOTES:
1. STRUCTURAL STEEL MEMBER SHALL NOT BE LESS THAN ⅜".
2. ARCHITECT, IOR, AND CONTRACTOR SHALL VERIFY THAT NO POWER ACTUATED FASTENER IS INSTALLED IN THE PROTECTED ZONE OF ANY STEEL MEMBER, SEE AISC 341.

4 STRUT CONNECTION TO STRUCT'L STL SCALE: 3"=1'-0"

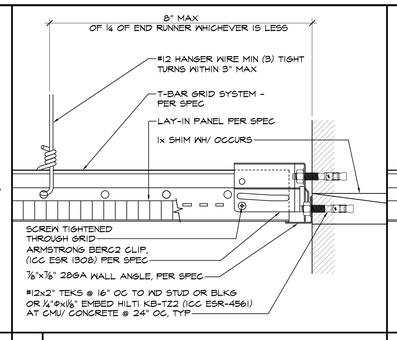

5 T-BAR FIXED END SCALE: 6"=1'-0"

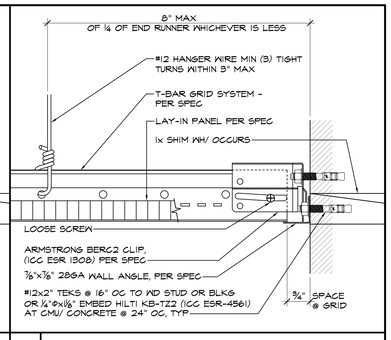

6 T-BAR FREE END SCALE: 6"=1'-0"

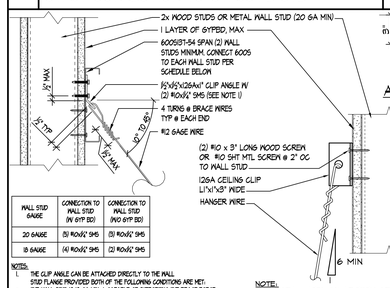

WALL STUD GAGE	CONNECTION TO WALL STUD (IN 6YP BD)	CONNECTION TO WALL STUD (NO 6YP BD)
20 GAGE	(5) #10x½" SMS	(5) #10x½" SMS
18 GAGE	(4) #10x½" SMS	(2) #10x½" SMS

NOTES:
1. THE CLIP ANGLE CAN BE ATTACHED DIRECTLY TO THE WALL STUD FLANGE PROVIDED BOTH OF THE FOLLOWING CONDITIONS ARE MET:
- THE WALL STUD IS 18 GA MIN. & CAPABLE OF SUPPORTING THE BRACE FORCE.
- THE BRACE WIRE ALIGNS WITH THE WALL STUD WEB.

NOTE: THIS DETAIL APPLIES AT PERIMETER WIRE ATTACHMENT OR WHERE OBSTRUCTION PREVENTS ATTACHMENT TO THE STRUCTURE ABOVE.

BRACING TO MTL STUD WALL

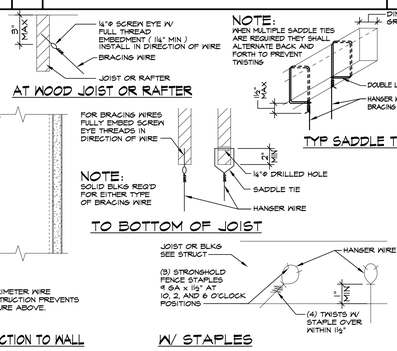

HANGER WIRE CONNECTION TO WALL

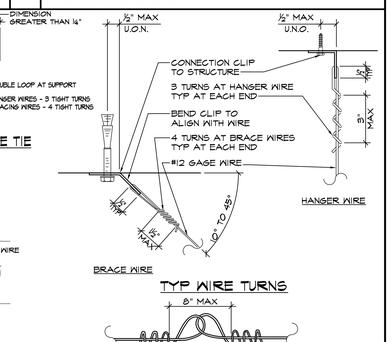

NOTES:
1. WIRE SPLICES ARE SHOWN LOOSELY TIED FOR ILLUSTRATIVE PURPOSES ONLY AND SHALL BE DRAWN TIGHT TO COMPLETE INSTALLATION WHEN CONSTRUCTED.
2. WIRE LOOPS SHALL BE TIGHTLY WRAPPED AND SHARPLY BENT TO PREVENT ANY VERTICAL MOVEMENT OR ROTATION WITHIN THE LOOPS.
3. EACH HANGER AND BRACE WIRE SHALL BE SPLICED NO MORE THAN ONCE ALONG ITS LENGTH.

CEILING WIRE SPLICES

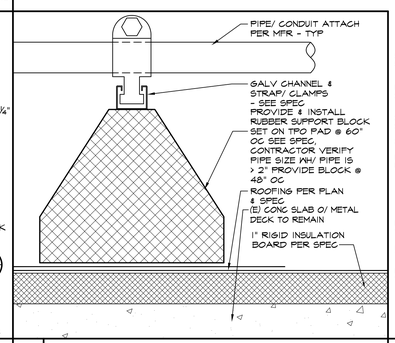

16 ROOFTOP SUPPORT SCALE: 6" = 1'-0"

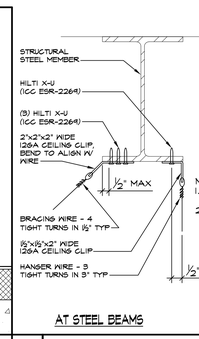

NOTES:
1. BEAM FLANGE THICKNESS SHALL NOT BE LESS THAN ⅜"
2. ARCHITECT, IOR, AND CONTRACTOR SHALL VERIFY THAT NO POWER ACTUATED FASTENER IS INSTALLED IN THE PROTECTED ZONE OF ANY STEEL MEMBER. SEE AISC 341.

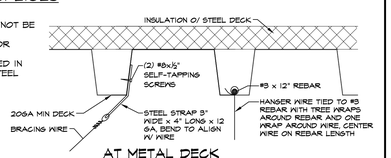

17 WIRE CONNECTION SCALE: NTS

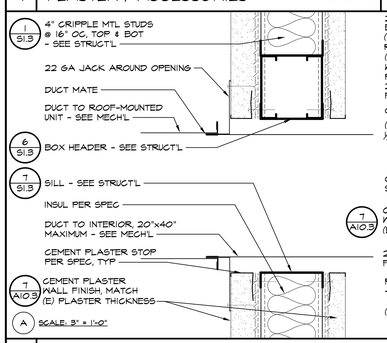

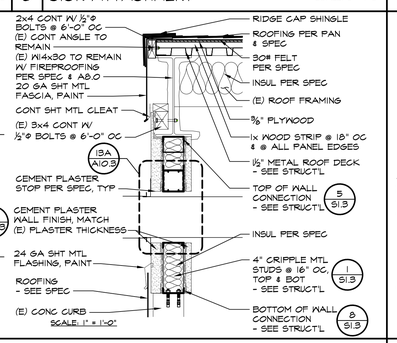

13 DUCT THRU WALL SCALE: AS NOTED

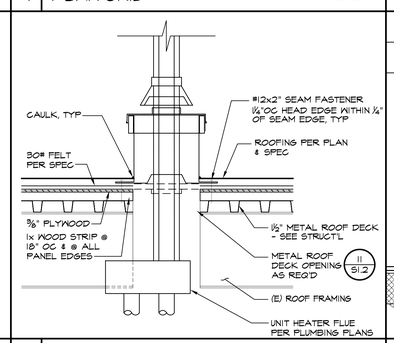

15 HEATER FLUE SCALE: 1½" = 1'-0"

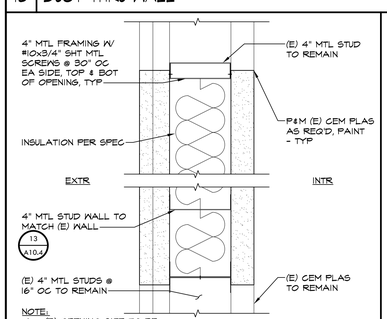

19 MTL WALL OPENING IN-FILL SCALE: 3" = 1'-0"

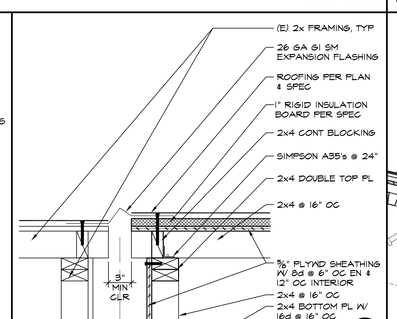

26 CRICKET BETWEEN BUILDINGS SCALE: ½" = 1'-0"

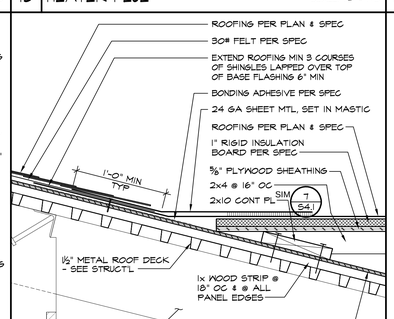

21 LOW-SLOPE TO STEEP-SLOPE SHINGLE ROOF TIE-IN SCALE: 1½" = 1'-0"

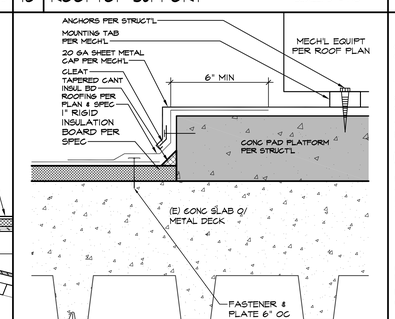

22 PLATFORM SCALE: 3" = 1'-0"

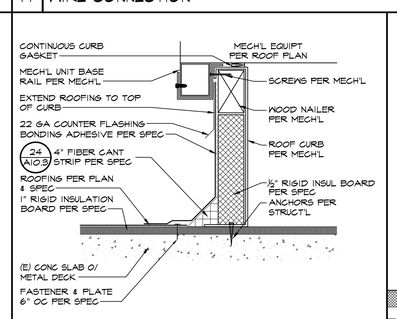

23 ROOF CURB SCALE: ½" = 1'-0"

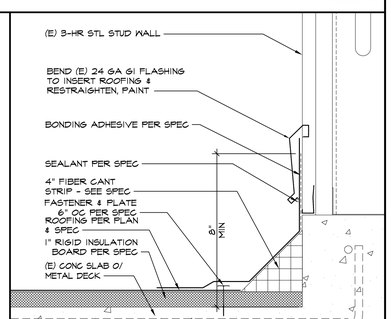

24 FIBER CANT SCALE: 3" = 1'-0"

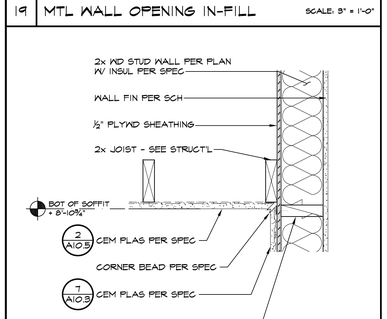

25 WD STUD WALL @ SOFFIT SCALE: ½" = 1'-0"

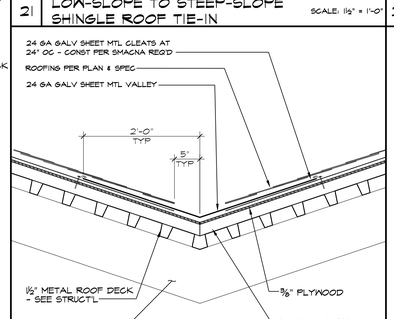

27 VALLEY FLASHING SCALE: 1" = 1'-0"

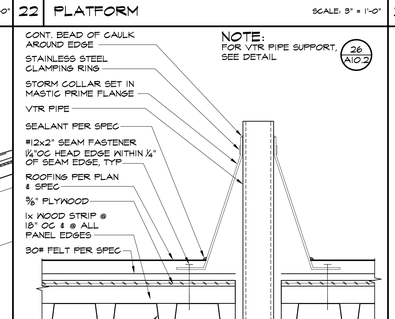

28 PIPE BOOT FLASHING @ ROOFING SCALE: 3"=1'-0"

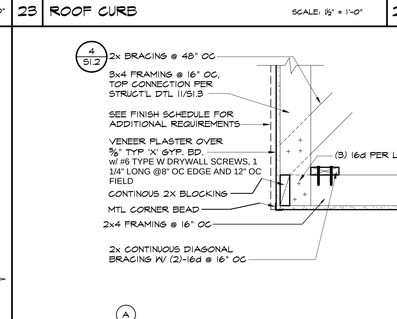

29 SOFFIT SCALE: 1" = 1'-0"

IDENTIFICATION STAMP
DIV. OF THE STATE ARCHITECT
APP: 03-122528 INC:
REVIEWED FOR
SS ☑ FLS ☑ ACS ☑
DATE: 01/06/2025

PTN : 63529-385 FILE: 15-H3

HIGHLAND HIGH SCHOOL
CAFETERIA REHABILITATION AND MODERNIZATION
2900 ROYAL SCOTS WAY
FOR
KERN HIGH SCHOOL DISTRICT
BAKERSFIELD, KERN COUNTY, CALIFORNIA

ARCHITECT SCA inc.
1601 NEW STINE ROAD, SUITE 280
BAKERSFIELD, CA 93309
PH: (661) 397-4377
FAX: (661) 397-4378
WWW.SCARCHITECT.COM
LICENSED ARCHITECT STEPHEN J. CORBIN C16382 STATE OF CALIFORNIA
STEPHEN J. CORBIN, NCARB, AIA, LEED ®-AP

CHECK AND VERIFY ALL DIMENSIONS BEFORE PROCEEDING WITH THE WORK. REPORT DISCREPANCIES TO THE ARCHITECT. ALL CONSTRUCTION SHALL CONFORM TO THE C.B.C.

KERN HIGH SCHOOL DISTRICT — Tradition of Excellence — Est. 1893

DETAILS

MARK	DATE	REVISIONS
1		
2		
3		

JOB NO. 1319
DRAWN : ED, FJS
CHECKED : BCW
DATE : 9/25/24

10.3
25 OF 99 SHEETS

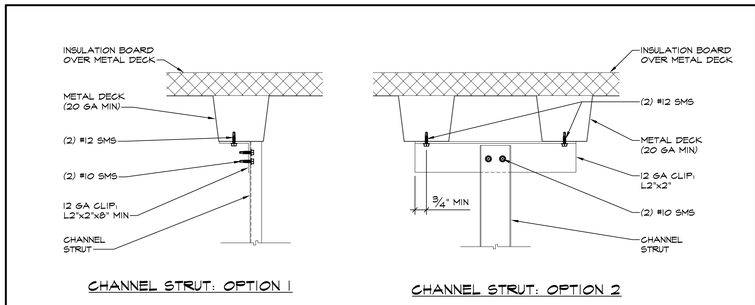

1 STRUT CONNECTION TO BARE METAL DECK SCALE: 3" = 1'-0"

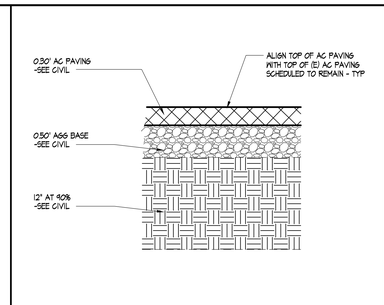

3 ASPHALT CONCRETE PAVING SCALE: 1/2" = 1'-0"

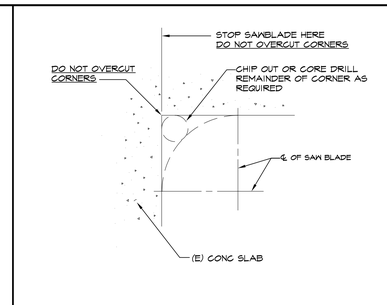

4 SAW - CUTTING SCALE: NTS

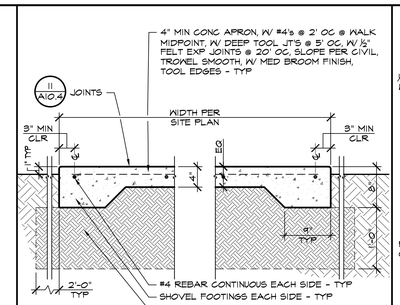

5 CONCRETE WALK SCALE: 1" = 1'-0"

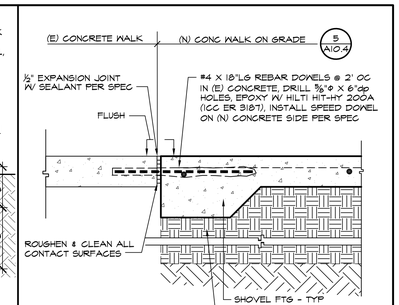

6 CONCRETE WALK @ (E) WALK SCALE: 1/2" = 1'-0"

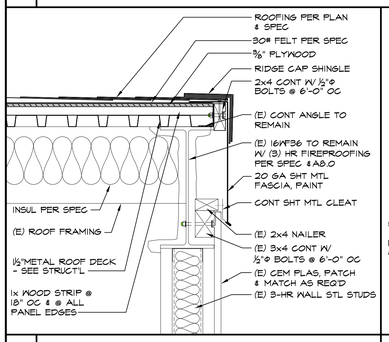

7 FASCIA @ MECHANICAL WELL SCALE: 1 1/2" = 1'-0"

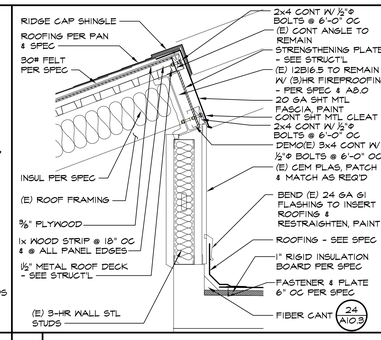

8 FASCIA @ MECHANICAL WELL SCALE: 1" = 1'-0"

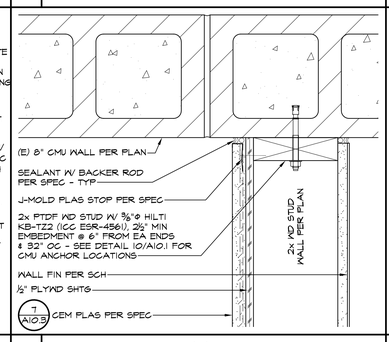

9 WD STUD WALL @ (E) CMU WALL SCALE: 3" = 1'-0"

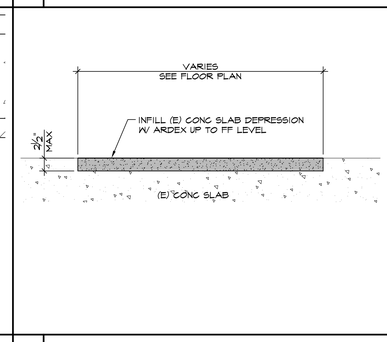

10 ARDEX INFILL @ DEPRESSION SCALE: 1" = 1'-0"

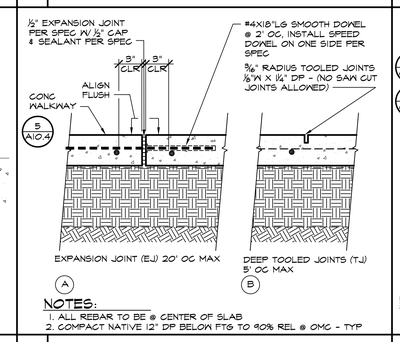

NOTES:
1. ALL REBAR TO BE @ CENTER OF SLAB
2. COMPACT NATIVE 12" DP BELOW FTG TO 90% REL @ OMC - TYP

11 CONCRETE JOINT DETAILS SCALE: 1/2" = 1'-0"

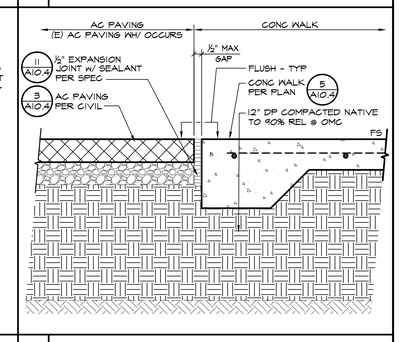

12 AC PAVING TO CONC WALK SCALE: 1/2" = 1'-0"

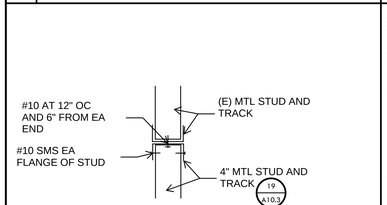

13 MTL STUD TOP CONNECTION / BOT SIM SCALE:

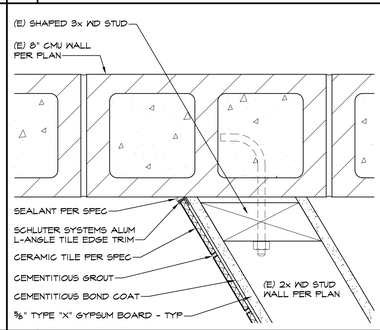

14 ANGLED WALL TILE SCALE: 3" = 1'-0"

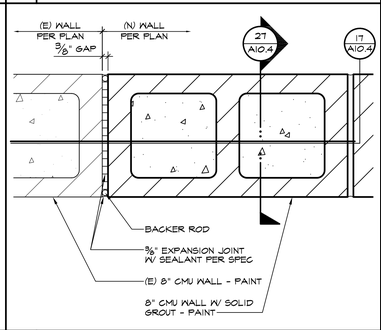

15 EXPANSION JOINT @ CMU WALL SCALE: 3" = 1'-0"

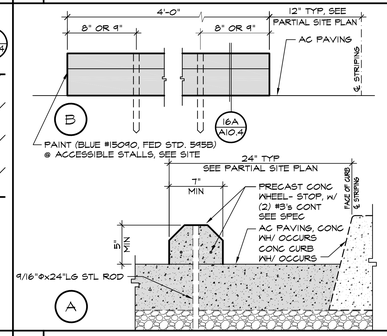

16 CONCRETE WHEEL STOP DTL. SCALE: 1/2" = 1'-0"

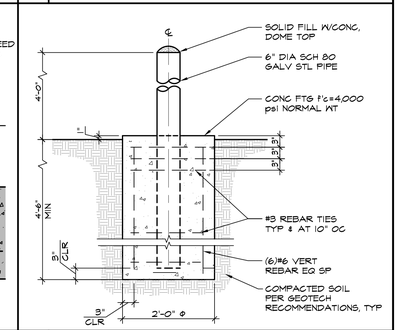

17 DOWEL TO (E) CONC FOOTING SCALE: 1/2" = 1'-0"

18 BOLLARD DETAIL SCALE: 3/4" = 1'-0"

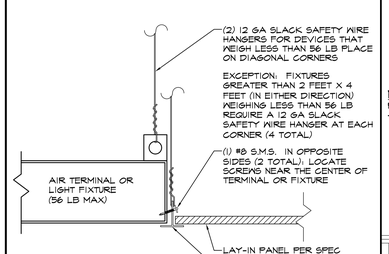

19 LUMINAIRE/ AIR TERMINAL SUPPORT SCALE: 3" = 1'-0"

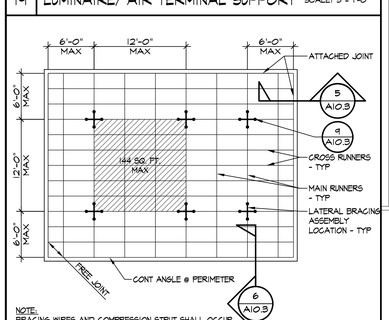

NOTE:
BRACING WIRES AND COMPRESSION STRUT SHALL OCCUR AT EVERY 144 SQ. FT. MAX IN ROOMS OVER 144 SQ. FT.

25 TYP CEILING PLAN FOR 12'-0"x12'-0" BRACE ASSEMBLY SPACING SCALE: 1/8" = 1'-0"

NOTE:
ROUGH OPENING AS REQ'D - SEE WINDOW SCHEDULE

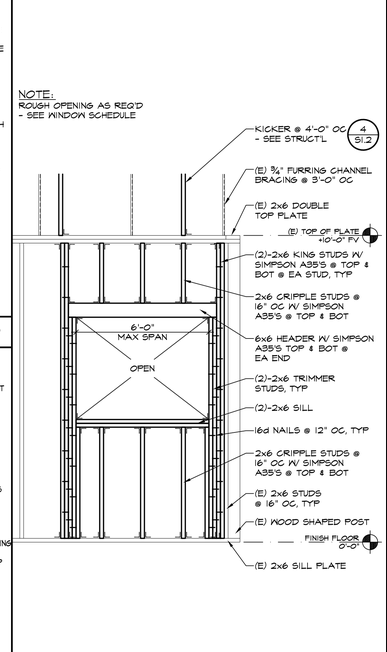

26 FRAMING ELEVATION SCALE: 1/2" = 1'-0"

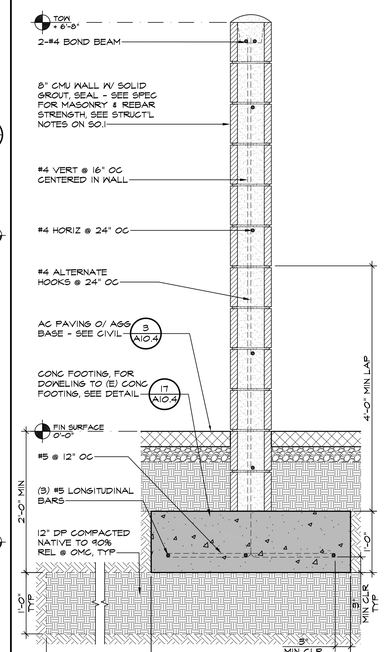

27 8" CMU BLOCK WALL SCALE: 1" = 1'-0"

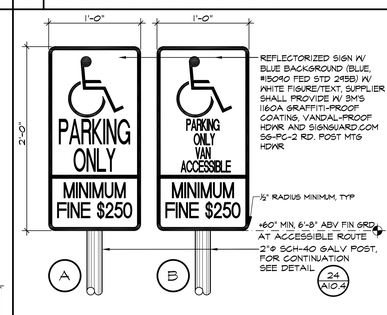

(PER 2022 CBC 11B-502.6)

22 ACCESSIBLE PARKING SIGNS SCALE: 1/2" = 1'-0"

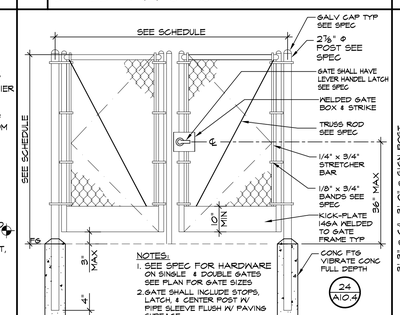

NOTES:
1. SEE SPEC FOR HARDWARE ON SINGLE & DOUBLE GATES SEE PLAN FOR GATE SIZES
2. GATE SHALL INCLUDE STOPS, LATCH, & CENTER POST W/ PIPE SLEEVE FLUSH W/ PAVING SURFACE

23 DOUBLE C/L GATE SCALE: 1 1/2" = 1'-0"

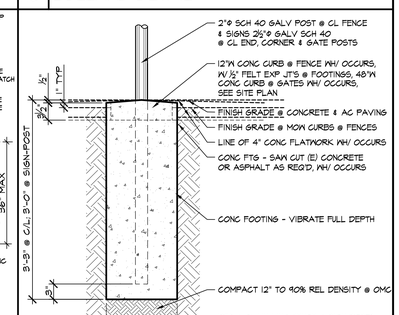

24 POST FOOTING DETAIL SCALE: 1" = 1'-0"

NOTES :
1. WHITE ISA FIGURE ON BLUE BACKGROUND (BLUE #15040 FED. STD. 595B)
2. THE ISA SHALL BE 3'-0" SQUARE, W/ SIDES PARALLEL TO LONG DIMENSION OF STALL
3. THE CENTERLINE OF THE ISA SHALL BE WITHIN 6" OF STALL CENTERLINE
4. THE ISA'S LOWER CORNER OR LOWER SIDE SHALL ALIGN WITH THE END OF THE STALL

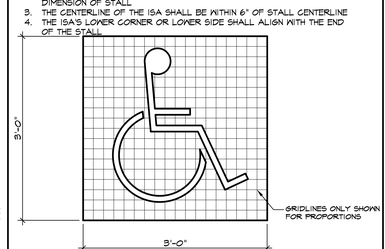

(PER 2022 CBC SEC. 11B-502.6.4.1 & 11B-703.7.2.1)
ISA = INTERNATIONAL SYMBOL OF ACCESSIBILITY

28 ACCESSIBLE SYMBOL DETAIL SCALE: 1" = 1'-0"

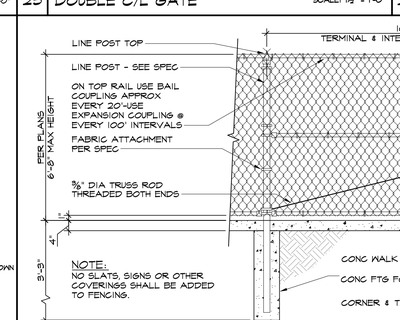

NOTE:
NO SLATS, SIGNS OR OTHER COVERINGS SHALL BE ADDED TO FENCING.

29 CHAIN LINK FENCE SCALE: 1/2" = 1'-0"

IDENTIFICATION STAMP
DIV. OF THE STATE ARCHITECT
APP: 03-122528 INC:
REVIEWED FOR
SS ☑ FLS ☑ ACS ☑
DATE: 01/06/2025

PTN: 63529-385 FILE: 15-H3

HIGHLAND HIGH SCHOOL
CAFETERIA REHABILITATION AND MODERNIZATION
2900 ROYAL SCOTS WAY
FOR
KERN HIGH SCHOOL DISTRICT
BAKERSFIELD, KERN COUNTY, CALIFORNIA

ARCHITECT SCI inc.
1601 NEW STINE ROAD, SUITE 280
BAKERSFIELD, CA 93309
PH: (661) 397-4377
FAX: (661) 397-4378
WWW.SCARCHITECT.COM
LICENSED ARCHITECT STEPHEN J. CORBIN C-15782 EXP. 12/31/25 STATE OF CALIFORNIA
STEPHEN J. CORBIN, NCARB, AIA, LEED ®-AP

CHECK AND VERIFY ALL DIMENSIONS BEFORE PROCEEDING WITH THE WORK. REPORT DISCREPANCIES TO THE ARCHITECT. ALL CONSTRUCTION SHALL CONFORM TO THE C.B.C.

KERN HIGH SCHOOL DISTRICT
Tradition of Excellence
Est. 2002

DETAILS

MARK	DATE	REVISIONS
1		
2		
3		

JOB NO. 1319
DRAWN: ED, FJS
CHECKED: BCW
DATE: 9/25/24

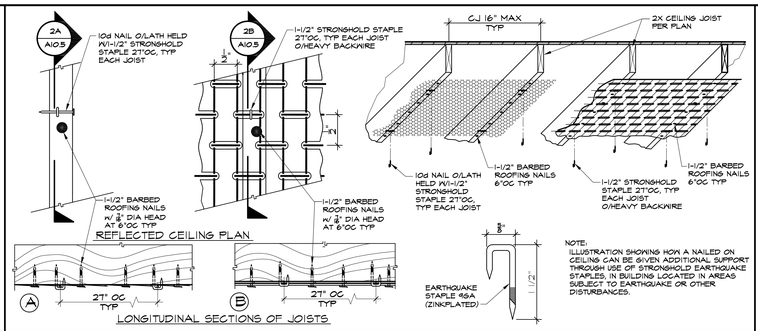

1 NOT USED SCALE:

2 HORIZONTAL LATH NAILING SCALE: NTS

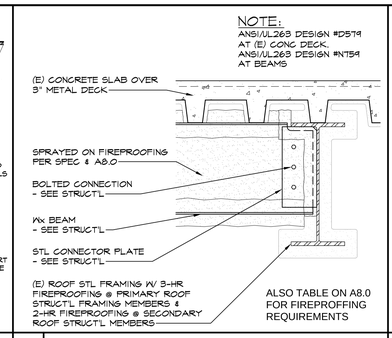

4 FIREPROOFING AT ROOF WELL SCALE: 1/2" = 1'-0"

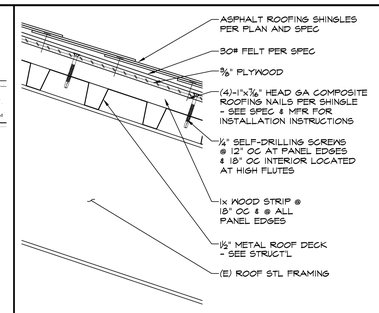

5 ASPHALT SHINGLES ROOF ASSEMBLY SCALE: 3" = 1'-0"

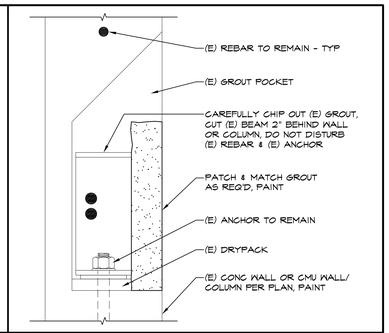

6 (E) STL BEAM SEAT SCALE: 3" = 1'-0"

7 NOT USED SCALE:

8 NOT USED SCALE:

9 NOT USED SCALE:

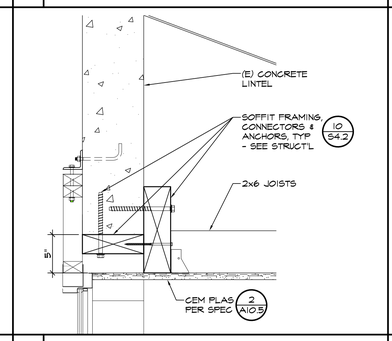

10 SOFFIT @ STOREFRONT OPENINGS SCALE: 1 1/2" = 1'-0"

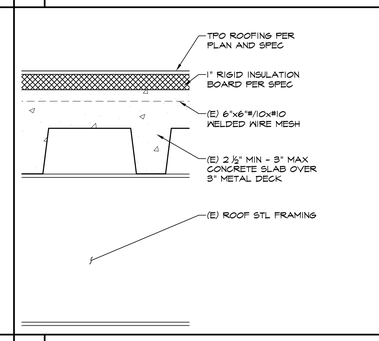

11 TPO ROOF ASSEMBLY SCALE: 3" = 1'-0"

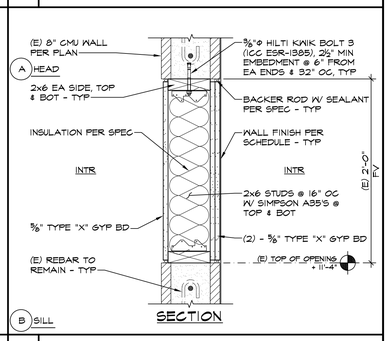

12 (E) DUCT OPENING IN-FILL SCALE: 1/2" = 1'-0"

13 NOT USED SCALE:

14 NOT USED SCALE:

15 NOT USED SCALE:

16 NOT USED SCALE:

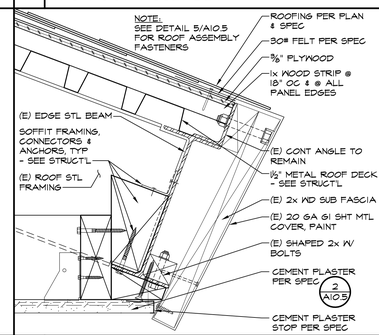

17 FASCIA @ EDGE STEEL BEAM SCALE: 3" = 1'-0"

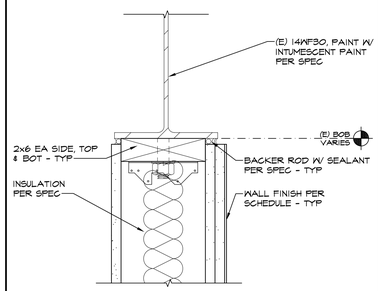

18 CONNECTION @ BEAM SCALE: 3" = 1'-0"

19 NOT USED SCALE:

20 NOT USED SCALE:

21 NOT USED SCALE:

22 NOT USED SCALE:

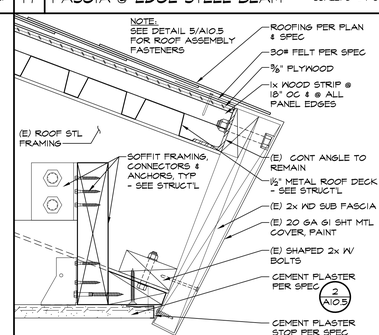

23 TYPICAL FASCIA SCALE: 3" = 1'-0"

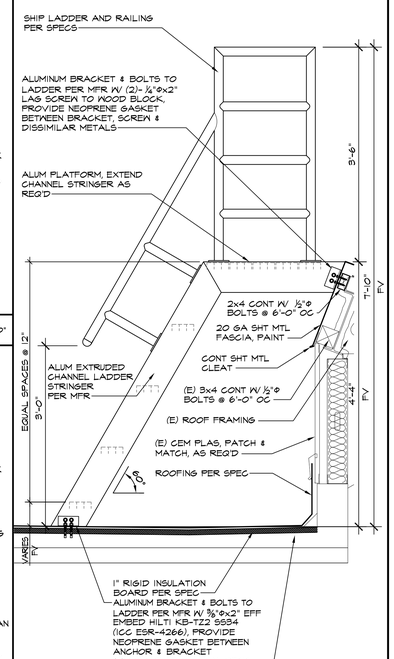

30 SHIP LADDER @ ROOF SCALE: 1" = 1'-0"

25 NOT USED SCALE:

26 NOT USED SCALE:

27 NOT USED SCALE:

28 NOT USED SCALE:

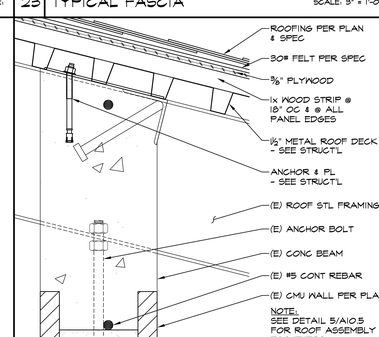

29 MTL DECK TO WALL CONNECTION SCALE: 3" = 1'-0"

IDENTIFICATION STAMP
DIV. OF THE STATE ARCHITECT
APP: 03-122528 INC:
REVIEWED FOR
SS ☑ FLS ☑ ACS ☑
DATE: 01/06/2025

PTN: 63529-385 FILE: 15-H3

HIGHLAND HIGH SCHOOL

CAFETERIA REHABILITATION AND MODERNIZATION

2900 ROYAL SCOTS WAY

FOR

KERN HIGH SCHOOL DISTRICT

BAKERSFIELD, KERN COUNTY, CALIFORNIA

ARCHITECT S&A inc.
1601 NEW STINE ROAD, SUITE 280
BAKERSFIELD, CA 93309
PH: (661) 397-4377
FAX: (661) 397-4378
WWW.SCARCHITECT.COM

LICENSED ARCHITECT STEPHEN J. CORBIN C-16785 STATE OF CALIFORNIA

STEPHEN J. CORBIN, NCARB, AIA, LEED ®-AP

CHECK AND VERIFY ALL DIMENSIONS BEFORE PROCEEDING WITH THE WORK. REPORT DISCREPANCIES TO THE ARCHITECT. ALL CONSTRUCTION SHALL CONFORM TO THE C.B.C.

KERN HIGH SCHOOL DISTRICT — Tradition of Excellence — Est. 2002

DETAILS

MARK	DATE	REVISIONS
1		
2		
3		

JOB NO. 1319
DRAWN: ED, FJS
CHECKED: BCW
DATE: 9/25/24

10.5

MASONRY (CONCRETE BLOCK)

1. MASONRY CONSTRUCTION SHALL COMPLY WITH THE REQUIREMENTS OF TMS 402-16.

2. CONCRETE BLOCK SHALL BE HOLLOW LOAD-BEARING CONCRETE MASONRY UNITS CONFORMING TO C90 GRADE N, MEDIUM WEIGHT. USE OPEN END UNITS AS REQUIRED, AND BOND BEAM UNITS AT HORIZONTAL REINFORCING. MINIMUM COMPRESSIVE STRENGTH OF BLOCKS AS REQUIRED TO MEET SPECIFIED COMPRESSIVE STRENGTH OF MASONRY (f'm) SPECIFIED IN THE CONSTRUCTION DOCUMENTS, BUT NOT LESS THAN 2000PSI.

3. SPECIFIED COMPRESSIVE STRENGTH OF MASONRY, f'm, SHALL BE 2000 PSI AT 28 DAYS, TYPICAL UNLESS NOTED OTHERWISE.

4. DEPUTY INSPECTOR SHALL VERIFY SPECIFIED COMPRESSIVE STRENGTH OF MASONRY IN ACCORDANCE WITH ONE OF THE FOLLOWING METHODS AS ALLOWED BY AND DEFINED IN SECTION 2105 OF THE CALIFORNIA BUILDING CODE:

   UNIT STRENGTH METHOD FOR f'm ≤ 2000 PSI
   PRISM TEST METHOD FOR f'm ≥ 2000 PSI

5. CEMENT SHALL BE AS SPECIFIED FOR CONCRETE.

6. MORTAR MIX SHALL CONFORM TO THE ASTM C270 REQUIREMENTS FOR TYPE S. MORTAR SHALL ATTAIN A MINIMUM COMPRESSIVE STRENGTH AS REQUIRED TO MEET THE SPECIFIED COMPRESSIVE STRENGTH OF MASONRY (f'm). IN NO CASE SHALL THE COMPRESSIVE STRENGTH OF THE MORTAR BE LESS THAN OF 2000 PSI AT 28 DAYS.

7. PROVIDE GROUT COMPLYING WITH ASTM C476 ATTAINING A MINIMUM COMPRESSIVE STRENGTH AS REQUIRED TO MEET THE SPECIFIED COMPRESSIVE STRENGTH OF MASONRY (f'm). IN NO CASE, THE COMPRESSIVE STRENGTH OF THE GROUT SHALL BE LESS THAN 2000 PSI AT 28 DAYS.

8. ADMIXTURES OR "SIKA GROUT AID" SHALL BE ADDED TO MORTAR OR GROUT RESPECTIVELY PER MANUFACTURER'S RECOMMENDATIONS.

9. PROVIDE A MINIMUM OF ONE BAR DIAMETER (1/2 INCH MINIMUM) GROUT BETWEEN MAIN REINFORCING AND MASONRY UNITS.

10. PROVIDE A MINIMUM OF ONE BAR DIAMETER (1 INCH MINIMUM) GROUT BETWEEN PARALLEL BARS.

11. MAXIMUM GROUT POUR HEIGHT SHALL COMPLY WITH TMS SECTION 3.5 C AND CBC 2104A.1.3.5 GROUT LIFTS SHALL COMPLY WITH TMS SECTION AND CBC 2104A.1.3.6.

12. ALL CELLS IN CONCRETE BLOCKS SHALL BE FILLED SOLID WITH GROUT, UNLESS NOTED OTHERWISE.

13. CELLS SHALL BE IN VERTICAL ALIGNMENT. DOWELS IN FOOTINGS AND FLOORS SHALL BE SET TO ALIGN WITH CELLS CONTAINING REINFORCING STEEL AND SHALL MATCH THE SIZE OF THE WALL REINFORCING.

14. REFER TO ARCHITECTURAL DRAWINGS FOR SURFACE AND HEIGHT OF UNITS, LAYING PATTERN, AND JOINT TYPE. ALL MASONRY SHALL BE RUNNING BOND, UNO.

15. IF WORK IS STOPPED FOR AN HOUR OR LONGER, PROVIDE HORIZONTAL CONSTRUCTION JOINT PER TYPICAL DETAILS AND BY STOPPING GROUT 1 1/2" BELOW TOP OF MASONRY UNIT.

FOUNDATIONS AND SITE WORK

1. THE DESIGN OF THE FOUNDATION SYSTEM IS BASED UPON THE CRITERIA AND RECOMMENDATIONS CONTAINED IN THE GEOTECHNICAL INVESTIGATION REPORT ENTITLED GEOTECHNICAL INVESTIGATION REPORT FOR THE HIGHLAND SCHOOL CAFETERIA MODERNIZATION BY SOILS ENGINEERING, INC, DATED DECEMBER 2., 2022 AND ALL SUBSEQUENT ADDENDA. COPIES SHALL BE MADE AVAILABLE AT THE PROJECT SITE AT ALL TIMES.

2. FOOTING DESIGN IS BASED ON THE FOLLOWING:

DESCRIPTION		MINIMUM DIMENSION
WIDTH	CONTINUOUS FTG	12 INCHES
	ISOLATED FTG	12 INCHES
EMBEDMENT (LOWEST ADJACENT GRADE TO BOTTOM OF FOOTING		18 INCHES

DESCRIPTION		ALLOWABLE CAPACITY	COMMENTS
VERTICAL BEARING PRESSURES	CONTINUOUS FTG	2,500 PSF	SEE NOTES A AND B
	ISOLATED FTG	2,500 PSF	SEE NOTES A AND B
LATERAL (PASSIVE) BEARING PRESSURE		360 PSF/FT	N/A
COEFFICIENT OF FRICTION		0.38	N/A

   A. CAPACITY MAY BE INCREASED BY 1/3 FOR SHORT-TERM WIND OR SEISMIC LOADS

3. ALL EARTHWORK SHALL BE DONE IN ACCORDANCE WITH SOILS REPORT RECOMMENDATIONS.THE GEOTECHNICAL INVESTIGATION REPORT AND ITS RECOMMENDATIONS SHALL BE FOLLOWED AND SHALL BE CONSIDERED MINIMUM REQUIREMENTS UNLESS MORE STRINGENT REQUIREMENTS ARE PRESENTED IN THE CONSTRUCTION DOCUMENTS.

4. THE CONTRACTOR IS SOLELY RESPONSIBLE FOR EXCAVATION PROCEDURES INCLUDING LAGGING, SHORING, UNDERPINNING AND PROTECTION OF EXISTING CONSTRUCTION.

5. CONTRACTOR SHALL PROVIDE DE-WATERING OF EXCAVATIONS FROM SURFACE WATER, GROUND WATER OR SEEPAGE AS REQUIRED. REMOVE LOOSE SOIL AND STANDING WATER FROM FOUNDATION EXCAVATIONS PRIOR TO PLACING CONCRETE.

6. EXCAVATION AND COMPACTING IF REQUIRED SHALL BE APPROVED BY THE GOVERNING AGENCY AND THE GEOTECHNICAL ENGINEER PRIOR TO PLACING THE CONCRETE AND REINFORCING. THE GEOTECHNICAL ENGINEER SHALL SUBMIT LETTER OF COMPLIANCE TO THE OWNER'S REPRESENTATIVE.

7. ALL EXCAVATIONS SHALL BE PROPERLY BACKFILLED. DO NOT PLACE BACKFILL BEHIND RETAINING WALLS BEFORE WALLS HAVE ATTAINED FULL DESIGN STRENGTH. CONTRACTOR SHALL BRACE OR PROTECT ALL BUILDING AND PIT WALLS BELOW GRADE FROM LATERAL LOADS UNTIL ATTACHING FLOORS ARE COMPLETELY IN PLACE AND HAVE ATTAINED FULL STRENGTH. CONTRACTOR SHALL PROVIDE FOR DESIGN, PERMITS AND INSTALLATION OF SUCH BRACING.

8. FOOTINGS SHALL BE PLACED AND ESTIMATED ACCORDING TO DEPTHS SHOWN ON DRAWINGS. SHOULD SOIL ENCOUNTERED AT THESE DEPTHS NOT BE APPROVED BY THE FOUNDATION ENGINEER, FOOTING ELEVATIONS SHALL BE ALTERED AS REQUIRED.

9. FOOTING BACKFILL AND UTILITY TRENCH BACKFILL WITHIN BUILDING AREA SHALL BE MECHANICALLY COMPACTED IN LAYERS IN ACCORDANCE WITH SOIL REPORT. FLOODING IS NOT BE PERMITTED.

10. LOCATE AND PROTECT EXISTING UTILITIES TO REMAIN DURING AND/OR AFTER CONSTRUCTION.

11. ALL ABANDONED FOOTINGS, UTILITIES, ETC., THAT INTERFERE WITH NEW CONSTRUCTION SHALL BE REMOVED.

CONCRETE CONTINUED

14. THOROUGHLY CLEAN AND ROUGHEN ALL EXISTING CONCRETE, CONCRETE PREVIOUSLY POURED AND HARDENED AND MASONRY SURFACES TO RECEIVE NEW CONCRETE. INTERFACE SHALL BE ROUGHENED TO A FULL AMPLITUDE OF 1/4" UNLESS NOTED OTHERWISE.

15. IF COLUMNS AND WALLS ARE PLACED WITH FLOOR, TWO HOURS MUST ELAPSE BETWEEN END OF COLUMN OR WALL POUR AND BEGINNING OF FLOOR POUR.

16. THE FOLLOWING MINIMUM CONCRETE COVER SHALL BE PROVIDED FOR REINFORCEMENT PLACED IN CAST-IN-PLACE CONCRETE:

   A. CONCRETE CAST AGAINST AND PERMANENTLY EXPOSED TO EARTH — 3"

   B. FORMED CONCRETE EXPOSED TO EARTH OR WEATHER:
      #6 THROUGH # 18 BARS — 2"
      #5 BAR, W31 OR D31 WIRE, AND SMALLER — 1 1/2"

   C. CONCRETE NOT EXPOSED TO WEATHER OR IN CONTACT WITH GROUND:
      SLABS, WALLS AND JOISTS:
      #14 AND #18 BARS — 1 1/2"
      #11 BAR AND SMALLER — 1"

      BEAMS, COLUMNS AND WALL JAMBS:
      PRIMARY REINFORCEMENT, TIES, STIRRUPS, AND SPIRALS:
      #3 THROUGH #11 — 1 1/2"
      #14 AND #18 BARS — 2 1/2"

17. ALL REINFORCING BARS, ANCHOR BOLTS AND OTHER CONCRETE INSERTS SHALL BE WELL SECURED IN POSITION PRIOR TO PLACING CONCRETE.

18. PROVIDE SLEEVES FOR PLUMBING AND ELECTRICAL OPENINGS IN CONCRETE BEFORE PLACING. DO NOT CUT ANY REINFORCING WHICH MAY CONFLICT. CORING IN CONCRETE IS NOT PERMITTED EXCEPT AS SHOWN. NOTIFY THE STRUCTURAL ENGINEER IN ADVANCE OF CONDITIONS NOT SHOWN ON THE DRAWINGS.

19. CONDUIT OR PIPE SIZE (O.D.) SHALL NOT EXCEED ONE THIRD OF SLAB THICKNESS AND SHALL BE PLACED BETWEEN THE TOP AND BOTTOM REINFORCING, UNLESS SPECIFICALLY DETAILED OTHERWISE. CONCENTRATIONS OF CONDUITS OR PIPES SHALL BE AVOIDED EXCEPT WHERE DETAILED OPENINGS ARE PROVIDED.

20. PROJECTING CORNERS OF BEAMS, WALLS, COLUMNS, ETC., SHALL BE FORMED WITH A 3/4 IN. CHAMFER, UNLESS OTHERWISE NOTED ON ARCHITECTURAL DRAWINGS.

21. CURING COMPOUNDS USED ON CONCRETE TO RECEIVE A FINISH SHALL BE APPROVED BY THE FINISH APPLICATOR BEFORE USE.

REINFORCING STEEL

1. ALL REINFORCING STEEL SHALL BE DETAILED AND PLACED IN CONFORMANCE WITH THE 'BUILDING CODE REQUIREMENTS FOR REINFORCED CONCRETE' (ACI 318), AND THE 'MANUAL OF STANDARD PRACTICE FOR REINFORCED CONCRETE CONSTRUCTION' BY THE C.R.S.I. AND THE W.C.R.S.I., OR AS MODIFIED BY THE CONSTRUCTION DOCUMENTS.

2. REINFORCING BARS SHALL CONFORM TO THE FOLLOWING, UNLESS NOTED OTHERWISE.

CLASSIFICATION	TYPE
REINFORCING STEEL IN GRAVITY BEAMS, GRAVITY COLUMNS, STIRRUPS, TIES, FOUNDATIONS, PILECAPS, AND GRADE BEAMS (UNO):	ASTM A615, 60 KSI*
REINFORCING STEEL TO BE WELDED AND LONGITUDINAL REINFORCING STEEL IN CONCRETE MOMENT FRAME MEMBERS AND IN CONCRETE SHEAR WALL ELEMENTS:	ASTM A706, 60 KSI

   * ASTM A706 GR 60 MAY BE CONSIDERED EQUIVALENT TO ASTM A615, BUT ASTM A615 IS NOT EQUIVALENT TO ASTM A706

3. WELDING OF REINFORCEMENT SHALL BE WITH LOW HYDROGEN E90XX ELECTRODES FOR WELDING ASTM A615 BARS AND E80XX ELECTRODES FOR WELDING ASTM A706 BARS TO OTHER A706 BARS. WELDING OF A706 BARS TO A36 AND A572 STEEL SHALL BE E70XX ELECTRODES. ALL WELDING SHALL BE IN CONFORMANCE WITH AMERICAN WELDING SOCIETY, AWS-D1.4. ONLY WELDERS SPECIFICALLY CERTIFIED FOR REINFORCING STEEL AND IN ACCORDANCE WITH AWS D1.4 SHALL PERFORM WELDING OF REINFORCING STEEL.

4. DRAWINGS SHOW TYPICAL REINFORCING CONDITIONS. CONTRACTOR SHALL PREPARE DETAILED PLACEMENT DRAWINGS OF ALL CONDITIONS SHOWING QUANTITY, SPACING, SIZE, CLEARANCES, LAPS, INTERSECTIONS AND COVERAGE REQUIRED BY STRUCTURAL DETAILS, APPLICABLE CODE AND TRADE STANDARDS. CONTRACTOR SHALL NOTIFY REINFORCING DEPUTY INSPECTOR OF ANY ADJUSTMENTS FROM TYPICAL CONDITIONS THAT ARE PROPOSED IN PLACEMENT DRAWINGS TO FACILITATE FIELD PLACEMENT OF REINFORCING STEEL AND CONCRETE.

5. ALL REINFORCING BAR BENDS SHALL BE MADE COLD.

6. MINIMUM LAP OF WELDED WIRE FABRIC SHALL BE 12 INCHES, OR ONE FULL MESH PLUS TWO INCHES, WHICHEVER IS GREATER.

7. REINFORCING SPLICES SHALL ONLY BE MADE AS INDICATED ON THE DRAWINGS.

8. DOWELS BETWEEN FOOTINGS AND WALLS OR COLUMNS SHALL BE THE SAME GRADE, SIZE AND SPACING AS THE VERTICAL REINFORCING, RESPECTIVELY, UNLESS NOTED OTHERWISE.

9. DOWELS BETWEEN SLABS AND WALLS OR COLUMNS SHALL BE THE SAME GRADE, SIZE AND SPACING AS THE VERTICAL REINFORCING, RESPECTIVELY, UNLESS NOTED OTHERWISE.

10. ALL BARS SHALL BE MARKED SO THEIR IDENTIFICATION CAN BE MADE WHEN THE FINAL IN-PLACE INSPECTION IS MADE.

11. CONTRACTOR SHALL PROVIDE FOR AN ALLOWABLE OF 5 TONS OF REINFORCING TO BE FABRICATED AND PLACED DURING PROGRESS OF WORK AS MAY BE DIRECTED BY THE STRUCTURAL ENGINEER. THE UNUSED PORTION SHALL BE CREDITED TO THE OWNER AT THE COMPLETION OF THE CONCRETE WORK.

GENERAL CONTINUED

27. DESIGN LOADS:

   A. DEAD LOADS: CONSIST OF BUILDING SELF-WEIGHT PLUS SUPERIMPOSED DEAD LOADS. REFER TO COMPLETE SET OF DRAWINGS FOR DETERMINING DEAD LOADS.

AREA	GRAVITY DEAD LOAD	SEISMIC DEAD LOAD
ROOF	29 PSF	34 PSF
MECHANICAL WELL	70 PSF	75 PSF
MECH WELL W/ CURB MOUNTED EQUIPMENT	128 PSF	133 PSF
MECH WELL W/ PAD MOUNTED EQUIPMENT	183 PSF	188 PSF

   B. LIVE LOADS:

AREA	DESIGN LIVE LOAD	REMARK
ROOF (INCLUDING MECH WELL)	20 PSF	REDUCIBLE

   C. SEISMIC DESIGN LOADS - MODERNIZATION: (EQUIPMENT ANCHORAGE, STEEL SUPPORT FRAME FOR WALK-IN COOLER, NON-BEARING WALL OUT -OF-PLANE ANCHORAGE)
      SEISMIC IMPORTANCE FACTOR I_e = 1.25
      RISK CATEGORY = III
      S_S = 0.918
      S_1 = 0.329
      SITE CLASS = D
      S_{DS} = 0.692

NOTE:
ASCE 41-17 METHODOLOGY AND ACCEPTANCE CRITERIA WERE USED TO EVALUATE AND DESIGN FOR THE RETROFIT FOR THE EXISTING BUILDING. THE ABOVE VALUES BASED ON ASCE 7-16 ARE PROVIDED FOR DESIGN OF NEW STRUCTURE OR EQUIPMENT ANCHORAGE WITHIN THE BUILDING.

ASCE 41-17 SPECTRAL ACCELERATIONS (EDCR APPROVAL #03-122973):

BSE 1N S_{XS} = 0.734
BSE 1N S_{X1} = 0.432
BSE 2N S_{XS} = 1.101
BSE 2N S_{X1} = 0.648

ANALYSIS PROCEDURE = LINEAR DYNAMIC PROCEDURE (LDP) PER ASCE 41-17 7.4.2

ASCE 41-17 EVALUATION PARAMETERS (EDCR APPROVAL #03-122973)

KNOWLEDGE FACTOR, k = 1
MODIFICATION FACTOR, BSE 1N, C1C2 = 1.4
MODIFICATION FACTOR, BSE 2N, C1C2 = 1.4
EFFECTIVE MASS FACTOR, Cm = 1.0
FORCE DELIVERY REDUCTION FACTOR, J = 2.0 UNO
FACTOR FOR ADJUSTING ACTION, BSE 1N = 1.3 (DAMAGE CONTROL)
FACTOR FOR ADJUSTING ACTION, BSE 2N = 1.15 (LIMITED SAFETY)

   D. WIND DESIGN LOADS - RETROFIT (EDCR APPROVAL #03-122973):
      BASIC WIND SPEED (3 SEC. GUST) = 101 MPH
      RISK CATEGORY = III
      WIND EXPOSURE = C
      INTERNAL PRESSURE COEFFICIENT = 0.18 FOR ENCLOSED STRUCTURE

DEMOLITION

1. CONTRACTOR IS FULLY RESPONSIBLE FOR PROVIDING THE MEANS AND METHODS OF DEMOLITION, MAINTAINING THE STRUCTURAL INTEGRITY AND STABILITY OF THE EXISTING STRUCTURE DURING AND AFTER DEMOLITION.

2. ALL DEMOLITION SHALL BE CARRIED ON IN SUCH A WAY AS NOT TO DAMAGE EXISTING ELEMENTS WHICH ARE TO BE IN THE FINISHED BUILDING.

3. ALL ELEMENTS OF THE STRUCTURE WHICH ARE TO REMAIN AND WHICH ARE DAMAGED DURING DEMOLITION WORK SHALL BE REPLACED AT NO ADDED COST AND TO THE COMPLETE SATISFACTION OF THE OWNER. EXISTING ELEMENTS SHALL BE PROTECTED TO THE FULLEST EXTENT POSSIBLE TO MINIMIZE SUCH DAMAGE.

4. CONTRACTOR SHALL VERIFY LOCATIONS OF EXISTING REBAR, ELECTRICAL CONDUITS, AND OTHER SYSTEMS EMBEDDED IN CONCRETE SLABS AND WALLS BY X-RAY OR RADIOGRAPHIC TESTING PRIOR TO DEMOLITION. DO NOT CUT OR DAMAGE EXISTING REBAR WITHOUT APPROVAL FROM THE SEOR.

CONCRETE

1. ALL CONCRETE IS REINFORCED AND CAST-IN-PLACE UNLESS OTHERWISE NOTED.

2. ALL PHASES OF WORK PERTAINING TO THE CONCRETE CONSTRUCTION SHALL CONFORM TO THE 'BUILDING CODE REQUIREMENTS FOR REINFORCED CONCRETE, ACI 318, WITH MODIFICATIONS AS NOTED IN THE CONTRACT DOCUMENTS.

3. CONCRETE MIXING OPERATION, ETC., SHALL CONFORM TO C-94.

4. PLACEMENT OF CONCRETE SHALL CONFORM TO ACI 304 AND CONTRACT DOCUMENTS.

5. ALL STRUCTURAL CONCRETE SHALL HAVE A MINIMUM COMPRESSIVE STRENGTH AT 28 DAYS AS FOLLOWS:

LOCATION	STRENGTH	TYPE OF CONCRETE
FOUNDATIONS	4000 PSI	NORMAL WEIGHT
SLAB ON GRADE	4000 PSI	NORMAL WEIGHT
FILL ON METAL DECK	4000 PSI	LIGHT-WEIGHT

6. PORTLAND CEMENT SHALL CONFORM TO ASTM C-150, TYPE I OR TYPE II, LOW ALKALI.

7. CONCRETE MIXES SHALL BE DESIGNED BY AN APPROVED LABORATORY. THE DESIGN SHALL BE STAMPED BY A CIVIL OR STRUCTURAL ENGINEER LICENSED IN THE STATE OF CALIFORNIA AND SUBMITTED TO THE OWNER'S REPRESENTATIVE FOR REVIEW AND APPROVAL. ADMIXTURES CONTAINING CALCIUM CHLORIDE ARE NOT ALLOWED.

8. NORMAL WEIGHT CONCRETE AGGREGATES SHALL CONFORM TO ASTM C-33. LIGHT WEIGHT CONCRETE AGGREGATES SHALL CONFORM TO ASTM C-330. DRY WEIGHT OF LIGHTWEIGHT CONCRETE NOT TO EXCEED 115 PCF.

9. NON-SHRINK CEMENT GROUT SHALL HAVE A MINIMUM 28 DAY COMPRESSIVE STRENGTH OF 6000 PSI. USE "SIKA GROUT 212" OR "MASTERFLOW 928".

10. FORMS FOR CONCRETE SHALL BE LAID OUT AND CONSTRUCTED TO PROVIDE THE SPECIFIED CAMBERS SHOWN ON THE DRAWINGS.

11. PROVIDE POUR POCKETS IN FORMS AND UNDER EXISTING STRUCTURAL MEMBERS AS REQUIRED TO PREVENT AIR POCKETS AND OR "HONEYCOMB" UNDER OR AROUND THE EXISTING MEMBERS. CONCRETE CAST WITH AIR POCKETS AND OR "HONEYCOMB" UNDER OR AROUND THE MEMBERS IS NOT ACCEPTABLE.

12. PLACE CONCRETE SLABS TO A LEVEL FINISH UNLESS NOTED OTHERWISE. THE MINIMUM CONCRETE SLAB THICKNESS SHALL BE AS SHOWN ON PLANS. OVERPOUR MAY BE REQUIRED DUE TO FORMING AND STRUCTURE DEFLECTION.

GENERAL

1. THE PROJECT SPECIFICATIONS FORM A PART OF THESE GENERAL NOTES.

2. THE CONTRACTOR SHALL VERIFY ALL DIMENSIONS PRIOR TO CONSTRUCTION. THE OWNER'S REPRESENTATIVE SHALL BE NOTIFIED OF ANY DISCREPANCIES OR INCONSISTENCIES.

3. INFORMATION SHOWN ON THE DRAWINGS RELATED TO EXISTING CONDITIONS REPRESENTS THE PRESENT KNOWLEDGE, BUT WITHOUT GUARANTEE OF ACCURACY. REPORT CONDITIONS THAT CONFLICT WITH THE CONTRACT DOCUMENTS TO THE OWNER'S REPRESENTATIVE. DO NOT DEVIATE FROM THE CONTRACT DOCUMENTS WITHOUT WRITTEN DIRECTION FROM THE OWNER'S REPRESENTATIVE.

4. DIMENSIONS SHALL TAKE PRECEDENCE OVER SCALED DRAWINGS. DRAWINGS SHALL NOT BE SCALED.

5. DETAILS IN SHEETS TITLED 'TYPICAL DETAILS', TYPICAL DETAILS AND GENERAL NOTES APPLY TO ALL PARTS OF THE WORK, EXCEPT WHERE SPECIFICALLY DETAILED OR UNLESS NOTED OTHERWISE. THESE DETAILS ARE NOT SPECIFICALLY REFERENCED WHERE THEY OCCUR.

6. NOTES AND DETAILS ON DRAWINGS SHALL TAKE PRECEDENCE OVER GENERAL NOTES AND TYPICAL DETAILS. WHERE NOTES AND DETAILS ON DRAWINGS AND THESEGENERAL NOTES AND TYPICAL DETAILS ARE IN CONFLICT WITH THE PROJECT SPECIFICATIONS THE MOST STRINGENT SHALL APPLY. CONDITIONS NOT SPECIFICALLY SHOWN SHALL BE CONSTRUCTED AS SHOWN FOR SIMILAR WORK.

7. ALL WORK SHALL CONFORM TO THE STANDARDS OF THE CALIFORNIA BUILDING CODE, 2022 EDITION, ASCE 41, 2017 EDITION, AND ANY OTHER REGULATING AGENCIES WHICH HAVE AUTHORITY OVER ANY PORTION OF THE WORK, INCLUDING BUT NOT LIMITED TO CAL/OSHA, DIVISION OF OCCUPATIONAL SAFETY AND HEALTH, AND THOSE CODES AND STANDARDS LISTED IN THE CONTRACT DOCUMENTS.

8. SPECIFICATIONS, CODES, AND STANDARDS NOTED IN THE CONTRACT DOCUMENTS SHALL BE OF THE LATEST APPROVED ISSUE, INCLUDING SUPPLEMENTS, UNLESS OTHERWISE NOTED. MATERIAL SPECIFICATIONS SHALL COMPLY WITH ASTM REFERENCED STANDARDS LATEST EDITION.

9. MANUFACTURED MATERIALS SHALL BE APPROVED BY THE CHECKING AGENCY PRIOR TO THEIR USE. ALL REQUIREMENTS OF THOSE APPROVALS SHALL BE FOLLOWED.

10. SEE ARCHITECTURAL DRAWINGS FOR THE FOLLOWING:
    A. SIZE AND LOCATION OF ALL CONCRETE CURBS, FLOOR DRAINS, SLOPES, DEPRESSED AREAS, CHANGES IN LEVEL, CHAMFERS, GROOVES, INSERTS, ETC.
    B. SIZE AND LOCATION OF ALL FLOOR AND ROOF OPENINGS.
    C. DIMENSIONS NOT SHOWN ON STRUCTURAL DRAWINGS.

11. SEE MECHANICAL, PLUMBING AND ELECTRICAL DRAWINGS FOR THE FOLLOWING:
    A. PIPE RUNS, SLEEVES, HANGERS, TRENCHES, WALL, ROOF AND FLOOR OPENINGS, ETC., NOT SHOWN OR NOTED.
    B. ELECTRICAL CONDUIT RUNS, BOXES, OUTLETS IN WALLS AND SLABS.
    C. ANCHORAGE AND BRACING FOR ELECTRICAL, MECHANICAL OR PLUMBING EQUIPMENT TO THE STRUCTURE.
    D. ANCHOR BOLTS FOR EQUIPMENT MOUNTS.
    E. SIZE, WEIGHT, AND LOCATION OF MACHINE AND EQUIPMENT BASES.

12. OPENINGS, POCKETS, ETC. SHALL NOT BE PLACED IN STRUCTURAL MEMBERS UNLESS SPECIFICALLY DETAILED ON THE STRUCTURAL DRAWINGS. NOTIFY THE STRUCTURAL ENGINEER OF RECORD WHEN DRAWINGS BY OTHERS SHOW OPENINGS, POCKETS, ETC., NOT SHOWN ON THE STRUCTURAL DRAWINGS, BUT WHICH ARE LOCATED IN STRUCTURAL MEMBERS.

13. CONTRACTOR SHALL CAREFULLY REVIEW THE DRAWINGS TO IDENTIFY THE EXTENT OF THE SCOPE OF WORK. VISIT THE SITE TO RELATE THE SCOPE OF WORK TO EXISTING CONDITIONS AND DETERMINE THE EXTENT TO WHICH THOSE CONDITIONS AND PHYSICAL SURROUNDINGS WILL IMPACT THE WORK.

14. THE CONTRACTOR SHALL RESOLVE ANY CONFLICTS ON THE CONSTRUCTION DOCUMENTS WITH THE OWNER'S REPRESENTATIVE BEFORE PROCEEDING WITH THE WORK.

15. UNLESS NOTED OTHERWISE, COLUMNS, WALLS, BEAMS, FOOTINGS, ETC, ARE CENTERED AT GRIDLINES. WHERE BEAM TO BEAM SPACING IS NOT SHOWN, BEAM SHALL BE EQUALLY SPACED BETWEEN GRIDLINES.

16. ANY DEVIATION FROM THE APPROVED SET OF STRUCTURAL DRAWINGS SHALL BE SUBMITTED TO THE OWNER'S REPRESENTATIVE FOR REVIEW/APPROVAL BEFORE PROCEEDING WITH THE WORK. SUBSTITUTIONS OF PRODUCTS OR MATERIALS SPECIFIED ON THE CONSTRUCTION DOCUMENTS ARE NOT ALLOWED WITHOUT OWNER'S REPRESENTATIVE'S APPROVAL.

17. THE CONTRACT DOCUMENTS REPRESENT THE FINISHED STRUCTURE. THEY DO NOT INDICATE THE METHOD OF CONSTRUCTION. THE CONTRACTOR SHALL PROVIDE MEANS, METHOD, TECHNIQUES, SEQUENCE AND PROCEDURE OF CONSTRUCTION AS REQUIRED. SITE VISITS PERFORMED BY THE OWNER'S REPRESENTATIVE DO NOT INCLUDE INSPECTIONS OF MEANS AND METHODS OF CONSTRUCTION PERFORMED BY CONTRACTOR.

18. THE CONTRACTOR SHALL PROVIDE ALL NECESSARY SHORES, BRACES AND GUYS REQUIRED TO SUPPORT ALL LOADS TO WHICH THE BUILDING STRUCTURE AND COMPONENTS, SOILS, OTHER STRUCTURES AND UTILITIES MAY BE SUBJECTED DURING CONSTRUCTION. SHORING SYSTEMS SHALL BE DESIGNED AND STAMPED BY A CIVIL OR STRUCTURAL ENGINEER LICENSED IN THE STATE OF CALIFORNIA. VISITS TO THE SITE BY THE OWNER'S REPRESENTATIVE WILL NOT INCLUDE OBSERVATION OF THE ABOVE NOTED ITEMS.

19. CONSTRUCTION MATERIALS SHALL BE SPREAD OUT IF PLACED ON FRAMED FLOORS OR ROOFS. LOAD SHALL NOT EXCEED THE DESIGN LIVE LOAD PER SQUARE FOOT SPECIFIED ON THIS SET OF DRAWINGS. PROVIDE ADEQUATE SHORING AND/OR BRACING WHERE STRUCTURE HAS NOT ATTAINED DESIGN STRENGTH OR WHERE OVERLOAD IS ANTICIPATED.

20. STRUCTURAL OBSERVATIONS PERFORMED BY THE STRUCTURAL ENGINEER DURING CONSTRUCTION ARE NOT THE REQUIRED CONTINUOUS AND SPECIAL INSPECTION SERVICES AND DO NOT WAIVE THE RESPONSIBILITY FOR THE INSPECTIONS REQUIREDOF THE BUILDING INSPECTOR OR THE DEPUTY INSPECTOR. OBSERVATIONS ALSO DO NOT GUARANTEE CONTRACTOR'S PERFORMANCE AND SHALL NOT BE CONSIDERED ASSUPERVISION OF CONSTRUCTION.

21. CONTRACTOR SHALL REVIEW SHOP DRAWINGS FOR COMPLETENESS AND COMPLIANCEWITH CONTRACT DOCUMENTS AND SHALL STAMP SHOP DRAWINGS PRIOR TO SUBMISSION TO THE OWNER'S REPRESENTATIVE.

22. ARCHITECT'S / ENGINEER'S REVIEW OF THE SHOP DRAWINGS SHALL NOT BE CONSTRUED AS AN AUTHORIZATION TO DEVIATE FROM CONTRACT DOCUMENTS.

23. SHOP DRAWINGS WILL NOT BE PROCESSED DUE TO INCOMPLETENESS, LACK OF COORDINATION WITH RELEVANT PORTION OF CONTRACT DOCUMENTS, LACK OF CALCULATIONS IF REQUIRED AND WHERE DEVIATIONS, MODIFICATIONS AND SUBSTITUTIONS ARE INDICATED WITHOUT PRIOR WRITTEN APPROVAL FROM THE OWNER'S REPRESENTATIVE.

24. ALLOW SEVEN WORKING DAYS FOR PROCESSING SHOP DRAWINGS OTHER THAN STRUCTURAL STEEL & DESIGN-BUILD ITEMS AFTER RECEIPT BY THE STRUCTURAL ENGINEER. ALLOW FOURTEEN WORKING DAYS FOR PROCESSING STRUCTURAL STEEL & DESIGN-BUILD ITEMS SHOP DRAWINGS. SHOP DRAWINGS AND SUBMITTALS WILL BE REVIEWED A MAXIMUM OF TWO TIMES.

25. THE LATERAL SYSTEM OF THE STRUCTURE IS DESIGNED WITH LATERAL RESTRAINT AT THE GROUND FLOOR. STRUCTURAL FRAMES ARE NOT LATERALLY SELF SUPPORTING UNTIL THE ENTIRE DESIGN LATERAL RESTRAINT FLOOR AND STRUCTURAL WALLS BELOW ARE IN PLACE.

26. DO NOT SPLICE STRUCTURAL MEMBERS UNLESS SPECIFICALLY DETAILED AND INDICATED IN THIS SET OF DRAWINGS. DO NOT PLACE OPENINGS, POCKETS, ETC. IN STRUCTURAL MEMBERS UNLESS SPECIFICALLY DETAILED AND INDICATED IN THIS SET OF STRUCTURAL DRAWINGS. NOTIFY THE STRUCTURAL ENGINEER IF DRAWINGS BY OTHERS REQUIRE MODIFICATIONS TO STRUCTURAL MEMBERS AS SHOWN IN THIS SET OF STRUCTURAL DRAWINGS PRIOR TO PROCEEDING WITH THE WORK.

MARTIN & associates
JOHN A. MARTIN & ASSOCIATES
Structural Engineers
950 S. Grand Avenue
Los Angeles, Calif. 90015
Phone (213) 483-6490
Fax (213) 483-3084
J21067

REGISTERED PROFESSIONAL ENGINEER JOHN WARD No. S6869 STRUCTURAL STATE OF CALIFORNIA

IDENTIFICATION STAMP
DIV. OF THE STATE ARCHITECT
APP: 03-122528 INC:
REVIEWED FOR
SS ☑ FLS ☑ ACS ☑
DATE: 01/06/2025

PTN : 63529-385 FILE: 15-H3

HIGHLAND HIGH SCHOOL
CAFETERIA MODERNIZATION
2900 ROYAL SCOTS WAY
FOR
KERN HIGH SCHOOL DISTRICT
BAKERSFIELD, KERN COUNTY, CALIFORNIA

SC ARCHITECT Inc.
1601 NEW STINE ROAD, SUITE 280
BAKERSFIELD, CA 93309
PH: (661) 397-4377
FAX: (661) 397-4378
WWW.SCARCHITECT.COM

STEPHEN J. CORBIN, NCARB, AIA, LEED ®-AP

CHECK AND VERIFY ALL DIMENSIONS BEFORE PROCEEDING WITH THE WORK. REPORT DISCREPANCIES TO THE ARCHITECT. ALL CONSTRUCTION SHALL CONFORM TO THE C.B.C.

KERN HIGH SCHOOL DISTRICT
Tradition of Excellence

GENERAL NOTES

MARK	DATE	REVISIONS
1		
2		
3		

JOB NO.: J21067
DRAWN : JAMA
CHECKED : JAMA
DATE : 08/11/23

S
0.1
OF SHEETS

LUMBER

1. UNLESS NOTED OTHERWISE, LUMBER SHALL BE DOUGLAS FIR-LARCH, GRADE MARKED, WITH A MAXIMUM MOISTURE CONTENT OF 19% AT THE TIME OF INSTALLATION.
2. UNLESS NOTED OTHERWISE ON THE DRAWINGS, LUMBER GRADES SHALL BE AS FOLLOWS:
   A. VERTICAL FRAMING MEMBERS

POSTS	No 1
STUDS	CONSTRUCTION
ALL OTHER VERTICAL MEMBERS	No 2
BRACE	No 2

   B. HORIZONTAL FRAMING MEMBERS

BEAMS	SELECT STRUCTURAL.
JOISTS AND RAFTERS	No 1
ALL OTHER HORIZONTAL MEMBERS	No 1

3. PLYWOOD SHEATHING SHALL BE DOUGLAS FIR AND SHALL COMPLY WITH THE LATEST ADOPTED EDITION OF U.S. PRODUCT STANDARD PS 1. GRADES SHALL BE MARKED STRUCTURAL 1 BY APA AND BONDED WITH EXTERIOR GLUE UNLESS NOTED OTHERWISE. REFER TO PLANS AND DETAILS FOR THICKNESS. ALL PLYWOOD SHEATHING SHALL BE BLOCKED AT UNSUPPORTED EDGES
4. NAILS SHALL BE COMMON WIRE NAILS AND SHALL CONFORM TO ASTM F1667. UNLESS NOTED OTHERWISE ON THE PLANS, NAILING SHALL COMPLY AS A MINIMUM WITH NAILING AND FASTENING SCHEDULES PRESCRIBED BY THE GOVERNING BUILDING CODE.
5. CONNECTOR REFERENCES, UNLESS NOTED OTHERWISE ARE FROM THE LATEST ADOPTED EDITION OF "SIMPSON STRONG-TIE" CATALOG. APPROVED EQUALS SHALL HAVE MATCHING ICC-ES RATINGS AND USED WITH PRIOR APPROVAL OF THE ARCHITECT OR STRUCTURE ENGINEER.
   A. WHERE MORE THAN ONE TYPE OF FASTENER IN THE REFERENCE SERIES IS SCHEDULED FOR A JOIST OR RAFTER, THE CONTRACTOR SHALL SUPPLY THE FASTENER WITH THE GREATEST CAPACITY.
   B. WHERE THERE ARE A NUMBER OF NAILING ALTERNATIVES LISTED IN THE MANUFACTURER'S CATALOG FOR A PARTICULAR CONNECTOR, THE NAILING ALTERNATIVE PROVIDING THE HIGHEST LOAD CAPACITY SHALL BE USED UNLESS NOTED OTHERWISE.
   C. ALL NAIL HOLES IN THE CONNECTOR SHALL BE FILLED WITH PROPER NAILS UNLESS NOTED OTHERWISE ELSEWHERE. (INCLUDING TRIANGULAR HOLES IN "HU" HANGERS.
6. SILL PLATES AND OTHER WOOD MEMBERS BEARING DIRECTLY ON THE CONCRETE SLAB THAT IS IN DIRECT CONTACT WITH EARTH OR WOOD MEMBERS IN DIRECT CONTACT WITH CONCRETE OR MASONRY FOUNDATIONS SHALL BE PRESERVATIVE-TREATED LUMBER.
7. FASTENERS AND HARDWARE IN CONTACT WITH PRESERVATIVE-TREATED OR FIRE-RETARDANT-TREATED LUMBER SHALL BE HOT DIPPED ZINC-COATED GALVANIZED STEEL AND SHALL COMPLY WITH SECTION 2304.9.5 OF THE CALIFORNIA BUILDING CODE.
8. FASTENERS AND HARDWARE EXPOSED TO WEATHER SHALL BE HOT DIPPED ZINC-COATED GALVANIZED STEEL AND SHALL COMPLY WITH ASTM 153.
9. SCREWS AND LAG SCREWS SHALL COMPLY WITH ANSI/ASME B18.6.1. PREDRILLED SCREW HOLES SHALL BE 2/3 THE SCREW NOMINAL DIAMETER. MINIMUM SCREW YIELD STRENGTH SHALL BE AS FOLLOWS:

SCREW NOMINAL DIAMETER	YIELD STRENGTH (F_{YB})
¼"	70,000 PSI
5/16"	60,000 PSI
⅜ AND GREATER	45,000 PSI

10. BOLTS:
    A. ALL BOLTS SHALL CONFORM TO ASTM A307, GRADE A.
    B. ALL ANCHOR RODS (ANCHOR BOLTS) SHALL CONFORM TO ASTM F1554, GRADE 36.
    C. BOLT HOLES SHALL NOT BE MORE THAN 1/16" LARGER THAN THE BOLT DIAMETER.
    D. ALL BOLT HEADS AND NUTS BEARING ON WOOD SHALL HAVE STANDARD CUT STEEL WASHERS MEETING THE REQUIREMENTS OF ANSI/ASME B18.22.1 UNDER BOLT HEADS AND NUTS.
    E. RE-TIGHTEN ALL NUTS PRIOR TO CLOSING IN.
11. LAG SCREWS SHALL BE TURNED, NOT DRIVEN, INTO PRE DRILLED HOLES OF 2/3 THE SHANK DIAMETER.
12. PROVIDE FULL BEARING AT END OF ALL BLOCKING, U.N.O.

POWDER ACTUATED FASTENERS (SHOT PINS)

1. POWDER ACTUATED FASTENERS INTO STEEL SHALL BE HILTI X-U FASTENERS (ICC ESR-2269). INSTALL ANCHORS IN ACCORDANCE WITH ICC REPORT AND MANUFACTURER'S RECOMMENDATIONS. FASTENERS SHALL BE OF SUFFICIENT LENGTH SUCH THAT THE POINT OF THE PIN PENETRATES THROUGH THE STEEL BASE MATERIAL WHEN CONNECTING TO STEEL LESS THAN 3/4 IN THICKNESS. FASTENERS LENGTH SHALL PROVIDE MINIMUM POINT PENETRATION OF 1/2" WHEN CONNECTING TO STEEL 3/4" OR THICKER IN THICKNESS U.N.O.
2. POWDER ACTUATED FASTENERS INTO CONCRETE SHALL BE HILTI X-U FASTENERS (ICC ESR-2269). INSTALL ANCHORS IN ACCORDANCE WITH ICC REPORT AND MANUFACTURER'S RECOMMENDATIONS. PROVIDE FASTENERS WITH SUFFICIENT LENGTH TO PROVIDE 1-1/2" MINIMUM PENETRATION INTO CONCRETE U.N.O.
3. FASTENERS SHALL NOT BE INSTALLED UNTIL THE CONCRETE HAS REACHED ITS DESIGNATED STRENGTH.
4. FASTENERS SHALL NOT BE INSTALLED IN CONCRETE WITH THICKNESS LESS THAN THREE TIMES THE PENETRATION REQUIRED, EXCEPT 1-1/2" PENETRATION IN 3-1/4" THICK CONCRETE FILL OVER METAL DECK IS ACCEPTABLE.
5. PROVIDE A MINIMUM OF 3" BETWEEN THE EDGE OF CONCRETE TO CENTER OF ANCHOR.
6. FASTENERS IN THE UNDERSIDE OF CONCRETE FILL OVER METAL DECK SHALL BE PLACED IN THE LOW FLUTES ONLY.
7. FASTENERS SHALL BE INSTALLED, BY A PRE-QUALIFIED OPERATOR, ACCORDING TO THE APPLICABLE ICC RESEARCH REPORT AND TESTED AS FOLLOWS: INSPECTOR SHALL OBSERVE THE TESTING OF THE FIRST 10 FASTENERS INSTALLATION. A TEST PULL-OUT LOAD OF NOT LESS THAN TWICE THE APPLICABLE ALLOWABLE LOAD PER ICC TABLES SHALL BE APPLIED TO THE PIN IN SUCH A MANNER AS NOT TO RESIST THE SPALLING TENDENCY OF THE CONCRETE SURROUNDING THE PIN (NOT APPLICABLE TO PINS INSTALLED INTO STEEL). RANDOM TESTS UNDER THE PROJECT INSPECTOR'S SUPERVISION SHALL BE MADE OF APPROXIMATELY 1 IN 20 PINS. SHOULD FAILURE OCCUR ON ANY PIN TESTED, ALL OF THE INSTALLATIONS MUST BE TESTED AND FAILED PINS REPLACED AT CONTRACTOR'S EXPENSE.
8. WHEN INSTALLING POWDER DRIVEN PINS IN EXISTING REINFORCED CONCRETE, USE CARE AND CAUTION TO AVOID CUTTING OR DAMAGING THE EXISTING REINFORCING BARS.

ADHESIVE ANCHORS AND DOWELS (CONT)

2. MANUFACTURER'S FIELD REPRESENTATIVE SHALL PROVIDE INSTALLATION TRAINING FOR ALL PRODUCTS TO BE USED PRIOR TO COMMENCEMENT OF WORK; ONLY PROPERLY TRAINED INSTALLERS SHALL PERFORM POST INSTALLED ANCHOR INSTALLATION.
3. INSTALLATION OF ADHESIVE ANCHORS IN HORIZONTAL TO VERTICAL ORIENTATION SHALL BE DONE BY A CERTIFIED ADHESIVE INSTALLER (AAI) AS CERTIFIED THROUGH ACI AND IN ACCORDANCE WITH THE CURRENT EDITION OF ACI 318.
4. LOCATE REINFORCEMENT AND CONFIRM FINAL ANCHOR LOCATIONS PRIOR TO FABRICATING PLATES, MEMBERS, OR OTHER STEEL ASSEMBLIES ATTACHED WITH ADHESIVE ANCHORS.
5. IF REINFORCEMENT IS ENCOUNTERED DURING DRILLING, ABANDON AND SHIFT THE HOLE LOCATION TO AVOID THE REINFORCEMENT. PROVIDE A MINIMUM OF 2 ANCHOR DIAMETERS OR 1 INCH, WHICHEVER IS LARGER, OF SOUND CONCRETE BETWEEN THE DOWEL AND THE ABANDONED HOLE. FILL THE ABANDONED HOLE WITH NON-SHRINK GROUT. IF THE ANCHOR OR DOWEL MAY NOT BE SHIFTED AS NOTED ABOVE, THE STRUCTURAL ENGINEER WILL DETERMINE A NEW LOCATION.
6. CENTER BAR IN THE HOLE AND WEDGE TIGHT WITH WOODEN WEDGES TO HOLD IT IN PLACE UNTIL THE ADHESIVE SETS.
7. PROVIDE MINIMUM EMBEDMENT OF ANCHORS AS SHOWN IN APPROVED DETAILS
8. WHERE TESTING IS REQUIRED, ANCHORS SHALL BE PROOF TESTED BY OWNER'S TESTING AND INSPECTION AGENCY.
9. UNLESS NOTED OTHERWISE, ANCHOR TEST FREQUENCY SHALL BE AS FOLLOWS:
   A. 10% FOR SILL PLATE ANCHORS
   B. 50% OR ALTERNATE BOLTS IN A GROUP FOR NONSTRUCTURAL COMPONENT ANCHORS
   C. 100% FOR ALL ANCHORS USED IN STRUCTURAL APPLICATIONS
10. TEST ANCHORS IN CONCRETE USING THE HYDRAULIC RAM METHOD: APPLY PROOF TEST LOAD WITHOUT REMOVING THE NUT. IF IT IS NOT POSSIBLE TO TEST WITH THE NUT INSTALLED, REPLACE THE NUT WITH A THREADED COUPLER TO THE SAME TORQUE MEASURED WITH A TORQUE WRENCH, AND THEN APPLY THE LOAD. ANCHOR IS ACCEPTABLE IF NO MOVEMENT IS OBSERVED AT THE TEST LOAD. MOVEMENT MAY BE DETERMINED WHEN THE WASHER UNDER THE NUT BECOMES LOOSE. TEST LOADS ARE SHOWN IN THE STRUCTURAL DETAILS.
11. PROVIDE F1554 GALVANIZED THREADED RODS FOR EXTERIOR USE OR WHEN ANCHORS SHALL CONFORM WITH ASTM A1941 GRADE B7 THREADED RODS USING ASTM A 5641 GRADE DH HEAVY HEX NUTS AND ASTM F4416 WASHERS U.N.O.
12. DOWELS SHALL CONFORM WITH ASTM A615 OR ASTM A706 GRADE 60 REINFORCING STEEL UNLESS NOTED OTHERWISE
13. REPLACE ANCHORS AND DOWELS THAT FAIL DURING TESTING AND RETEST. IF MORE THAN 10% OF THE TESTED DOWELS AND ANCHORS FAIL TO ACHIEVE THE SPECIFIED TEST LOAD, TEST 100% OF THE DOWELS AND ANCHORS INSTALLED IN THE LAST 2 DAYS OF ANCHOR INSTALLATION.

STRUCTURAL OBSERVATION

1. PERIODIC STRUCTURAL OBSERVATION WILL BE PROVIDED BY JOHN A. MARTIN & ASSOCIATES INC., STRUCTURAL ENGINEERS, PER SECTION 1710 OF THE CALIFORNIA BUILDING CODE AND ALL APPLICABLE AMENDMENTS. CONTRACTOR SHALL NOTIFY ENGINEER 48 HOURS BEFORE REQUIRED OBSERVATIONS. DELINQUENT NOTIFICATION MAY REQUIRE DEMOLITION OF COVERING MATERIAL TO FACILITATE OBSERVATION.
2. STRUCTURAL OBSERVATIONS PERFORMED BY JOHN A. MARTIN & ASSOCIATES CONSIST ON THE VISUAL OBSERVATION OF THE MAJOR ELEMENTS AND CONNECTIONS OF THE STRUCTURAL SYSTEM AT SIGNIFICANT CONSTRUCTION STAGES AND THE COMPLETED STRUCTURE FOR GENERAL CONFORMANCE TO THE APPROVED PLANS AND SPECIFICATIONS. STRUCTURAL OBSERVATION DOES NOT WAIVE THE REQUIREMENT/RESPONSIBILITY FOR THE INSPECTIONS REQUIRED OF THE BUILDING INSPECTOR OR THE SPECIAL INSPECTOR.
3. THE ENGINEER OF RECORD SHALL DEVELOP ALL CHANGES RELATING TO THE STRUCTURAL SYSTEMS. THE BUILDING DEPARTMENT SHALL REVIEW AND APPROVE ALL CHANGES TO THE APPROVED PLANS AND SPECIFICATIONS.

MECHANICAL ANCHORS

1. EXPANSION OR WEDGE ANCHORS INTO CONCRETE OR MASONRY PER SCHEDULE BELOW SHALL BE INSTALLED IN ACCORDANCE WITH ICC REPORT AND MANUFACTURER'S RECOMMENDATIONS.
2. SCREW ANCHORS INTO CONCRETE OR MASONRY PER SCHEDULE BELOW SHALL BE INSTALLED IN ACCORDANCE WITH ICC REPORT AND MANUFACTURER'S RECOMMENDATIONS.

CONCRETE		
MANUFACTURER	ANCHOR TYPE	
	EXPANSION	SCREW
HILTI	KB-TZ2 ICC ESR 4266	KH-EZ ICC ESR 3027

GROUT-FILLED MASONRY (CMU)		
MANUFACTURER	ANCHOR TYPE	
	EXPANSION	SCREW
HILTI	KB-TZ2 ICC ESR 4561	HUS-EZ ICC ESR 3056

3. FASTENERS SHALL BE STAINLESS STEEL FOR EXTERIOR USE OR WHEN EXPOSED TO WEATHER. PROVIDE GALVANIZED CARBON STEEL ANCHORS AT OTHER LOCATIONS, UNLESS OTHERWISE NOTED.
4. LOCATE REINFORCEMENT AND CONFIRM FINAL ANCHOR LOCATIONS PRIOR TO FABRICATING PLATES, MEMBERS, OR OTHER STEEL ASSEMBLIES ATTACHED WITH MECHANICAL ANCHORS.
5. IF REINFORCEMENT IS ENCOUNTERED DURING DRILLING, ABANDON AND SHIFT THE HOLE LOCATION TO AVOID THE REINFORCEMENT. PROVIDE A MINIMUM OF 2 ANCHOR DIAMETERS OR 1 INCH, WHICHEVER IS LARGER, OF SOUND CONCRETE BETWEEN THE DOWEL AND THE ABANDONED HOLE. FILL THE ABANDONED HOLE WITH NON-SHRINK GROUT. IF THE ANCHOR OR DOWEL MAY NOT BE SHIFTED AS NOTED ABOVE, THE STRUCTURAL ENGINEER WILL DETERMINE A NEW LOCATION.
6. PROVIDE MINIMUM EMBEDMENT OF ANCHORS AS SHOWN IN APPROVED DETAILS
7. WHERE TESTING IS REQUIRED, ANCHORS SHALL BE PROOF TESTED BY OWNER'S TESTING AND INSPECTION AGENCY.
8. TEST ANCHORS NO SOONER THAN 24 HOURS AFTER INSTALLATION.
9. UNLESS NOTED OTHERWISE, ANCHOR TEST FREQUENCY SHALL BE AS FOLLOWS:
   A. 10% FOR SILL PLATE ANCHORS
   B. 50% OR ALTERNATE BOLTS IN A GROUP FOR NONSTRUCTURAL COMPONENT ANCHORS
   C. 100% FOR ALL ANCHORS USED IN STRUCTURAL APPLICATIONS
10. TEST ANCHORS PER TORQUE WRENCH METHOD: TEST ANCHORS TO THE INSTALLATION TORQUE LOAD, PER THE ICC ESR REPORT, WITHIN ONE-QUARTER TURN OF THE NUT FOR SCREW ANCHORS AND ONE-HALF TURN OF THE NUT FOR ALL OTHER ANCHORS.

CONCRETE INSTALLATION TORQUE VALUES (FT-LB)					
ANCHOR TYPE	1/4	3/8	1/2	5/8	3/4
KB-TZ2 (CARBON STEEL)	4	30	50	40	110
KB-TZ2 (STAINLESS STEEL)	6	30	40	60	125
KH-EZ (CARBON STEEL)	18	40	45	85	95

CMU INSTALLATION TORQUE VALUES (FT-LB)					
ANCHOR TYPE	1/4	3/8	1/2	5/8	3/4
KB-TZ2 (CARBON STEEL)	4	15	25	30	50
KB-TZ2 (STAINLESS STEEL)	6	15	15	35	50
HUS-EZ (CARBON STEEL)	18	40	45	85	95

11. REACTION LOADS FROM TEST FIXTURES MAY BE APPLIED CLOSE TO THE ANCHOR BEING TESTED, PROVIDED THE ANCHOR IS NOT RESTRAINED FROM WITHDRAWING BY A BASE PLATE OR OTHER FIXTURE. IF RESTRAINT IS FOUND, LOOSEN AND SHIM OR REMOVE THE FIXTURE PRIOR TO TESTING.
12. IF ANCHOR FAILS TESTING, REPLACE ANCHOR AND TEST ADDITIONAL ANCHORS OF THE SAME CATEGORY NOT PREVIOUSLY TESTED UNTIL TWENTY (20) CONSECUTIVE TESTS PASS, THEN RESUME INITIAL TESTING REQUENCY.

ADHESIVE ANCHORS AND DOWELS

1. ANCHORS AND DOWELS INSTALLED INTO CONCRETE, GROUT-FILLED MASONRY (CMU) OR UNREINFORCED BRICK MASONRY (URM) PER SCHEDULES BELOW SHALL BE INSTALLED IN ACCORDANCE WITH ICC REPORT AND PER MANUFACTURER'S RECOMMENDATIONS.

CONCRETE		
MANUFACTURER	ADHESIVE TYPE	
	FAST CURE	SLOW CURE
HILTI	HIT HY-200 V3 (ICC ESR 4868)	HIT RE-500 V3 (ICC ESR 3814)
SIMPSON STRONG-TIE	-	SET-XP (ICC ESR 2508)

GROUT-FILLED MASONRY (CMU)	
MANUFACTURER	ADHESIVE TYPE
HILTI	HIT HY-200 V3 (ICC ESR 4878)

STRUCTURAL STEEL AND MISCELLENEOUS METAL (ALL OTHER STEEL)

1. ALL STEEL SHALL BE DETAILED, FABRICATED AND ERECTED IN ACCORDANCE WITH THE LATEST EDITION OF AISC SPECIFICATION FOR THE DESIGN, FABRICATION AND ERECTION OF STRUCTURAL STEEL FOR BUILDINGS AND THE LATEST EDITION OF AISC SEISMIC PROVISIONS FOR STRUCTURAL STEEL BUILDINGS. WHERE THE STRUCTURAL STEEL IS EXPOSED AND INDICATED AS 'AESS' ON PLANS OR DETAILS, FABRICATION AND ERECTION SHALL ALSO BE IN ACCORDANCE WITH AISC CODE OF STANDARD PRACTICE FOR ARCHITECTURALLY EXPOSED STRUCTURAL STEEL.
2. GENERAL CONTRACTOR TO DETERMINE SCOPE OF WORK FOR BOTH STRUCTURAL STEEL AND MISCELLANEOUS METAL SUBCONTRACTORS (IF MULTIPLE SUBCONTRACTORS ARE USED). THE COMBINED SCOPE OF WORK FOR ALL SUBCONTRACTORS SHALL INCLUDE ALL STRUCTURAL STEEL AND MISCELLANEOUS METAL WORK SHOWN ON THE CONTRACT DRAWINGS.
3. STRUCTURAL STEEL SHALL CONFORM TO ASTM DESIGNATION AS INDICATED BELOW UNLESS NOTED OTHERWISE:

ALL WIDE FLANGE AND WT SHAPES	A992, GRADE 50
STEEL ANGLES AND CHANNELS	A36 UNO
ALL OTHER STRUCTURAL SECTIONS	A572, GRADE 50
DECK CLOSURE PLATES AND SHIM MATERIALS	A36
BEAM SHEAR PLATES, STIFFENER PLATES, ALL OTHER PLATES	A36 STEEL
BOLTS	F3125, GRADE A325 OR GRADE F1852
MACHINE BOLTS (USE ONLY WHERE INDICATED)	A307
PLAIN, UNHARDENED WASHERS	F844
HSS (RECTANGULAR, SQUARE OR ROUND)	A500, GRADE C

4. HOT ROLLED SHAPES WITH FLANGES 1-1/2" THICK OR THICKER AND PLATES THAT ARE 2" THICK OR THICKER THAT ARE PART OF THE SEISMIC FORCE RESISTING SYSTEM SHALL HAVE A MINIMUM CHARPY V-NOTCH (CNV) TOUGHNESS OF 20 FT-LBS AT 70 DEGREES F.
5. HIGH STRENGTH BOLTS SHALL BE INSTALLED IN ACCORDANCE WITH THE LATEST EDITION OF AISC SPECIFICATIONS FOR STRUCTURAL JOINTS USING HIGH STRENGTH BOLTS. HIGH STRENGTH BOLTS SHALL BE SLIP CRITICAL (SC) WITH CLASS A FAYING SURFACE & WITH THREADS EXCLUDED FROM THE FROM THE SHEAR PLANES (I.E. A325-X-SC OR F1852-X-SC) UNLESS NOTED OTHERWISE.
6. HOT DIP GALVANIZE IN ACCORDANCE WITH ASTM A123 AND ASTM A153 STRUCTURAL STEEL, MISCELLANEOUS METAL AND FASTENERS THAT ARE EXPOSED TO THE WEATHER. REPAIR GALVANIZING AFTER WELDING IN ACCORDANCE WITH ASTM A780.
7. WHEN FABRICATING BEAMS, PLACE NATURAL CAMBER UP. PROVIDE UPWARD CAMBER TO ALL MEMBERS SHOWN TO HAVE CAMBER. AMOUNT MEASURED IN THE FIELD PRIOR TO ERECTION SHALL NOT DEVIATE BY MORE THAN ALLOWED BY THE AISC SPECIFICATIONS. DO NOT CAMBER MEMBERS OCCURRING BELOW ELEVATOR ENTRANCE DOORS.
8. SPLICE MEMBERS ONLY WHERE INDICATED.
9. THE STRUCTURAL STEEL FABRICATOR SHALL FURNISH SHOP DRAWINGS FOR OWNER'S REPRESENTATIVE REVIEW BEFORE FABRICATION. SUBMITTALS SHALL BE IN SIZES COMMENSURATE WITH A TWO WEEK TURNAROUND TIME. A MAXIMUM OF 250 SHOP DRAWINGS EVERY TWO WEEKS IS PERMITTED UNLESS WRITTEN AUTHORIZATION IS PROVIDED BY THE ARCHITECT TO CHANGE THIS LIMIT.
10. AFTER FABRICATION, ALL STEEL SHALL BE CLEANED FREE OF RUST, LOOSE MILL SCALE AND OIL.
11. BOLT HOLES IN STEEL SHALL BE STANDARD HOLES, 1/16 INCH LARGER IN DIAMETER THAN NOMINAL SIZE OF BOLT USED, UNLESS NOTED OTHERWISE. BOLT HOLES IN BASE PLATES MAY BE OVERSIZED PER AISC MANUAL TABLE 14-2 IF WASHERS ARE PROVIDED IN ACCORDANCE WITH THIS TABLE.
12. BOLTS SHALL BE SPACED AT 3" O.C. UNLESS NOTED OTHERWISE. THE DISTANCE FROM THE CENTER OF A STANDARD HOLE TO THE EDGE OF A CONNECTING PART IN ANY DIRECTION SHALL NOT BE LESS THAN 1 1/2" U.N.O. THE EDGE DISTANCE MAYBE 1 1/4" AT THE ENDS OF BEAM CONNECTION ANGLES AND SHEAR END PLATES. THE DISTANCE FROM CENTER OF AN OVERSIZED OR SLOTTED HOLE TO THE EDGE OF A CONNECTING PART SHALL NOT BE LESS THAN THAT REQUIRED FOR A STANDARD HOLE TO THE EDGE OF A CONNECTED PART PLUS THE APPLICABLE INCREMENT C_2 FROM AISC TABLE J3.5.
13. ALL STRUCTURAL STEEL SURFACES TO BE WELDED OR HIGH-STRENGTH BOLTED, TO BE ENCASED IN CONCRETE OR TO RECEIVE SPRAY-APPLIED FIREPROOFING SHALL BE LEFT UNPAINTED.
14. SEE ARCHITECTURAL DRAWINGS FOR DETAILS OF FIREPROOFING.

METAL DECK

1. THE STEEL DECKING SHALL BE OF TYPE AND GAUGE AS CALLED FOR ON THE DRAWINGS MANUFACTURED BY VERCO MANUFACTURING COMPANY, IAPMO UES ER217 OR APPROVED EQUAL. DECKING AND ALL ACCESSORIES SHALL BE FORMED FROM STEEL SHEETS HAVING A MINIMUM YIELD STRENGTH OF 40,000 PSI FOR ROOF DECK CONFIGURATIONS AND 50,000 PSI FOR FORMLOCK DECK CONFIGURATIONS, AND CONFORMING TO ASTM A-653. THE STEEL SHALL BE ZINC-COATED CONFORMING TO ASTM A525, MINIMUM CLASS G60. DECK UNITS SHALL BE CONTINUOUS OVER THREE OR MORE SPANS WHERE POSSIBLE.
2. DECK LAYOUT SHALL PROVIDE ALL DECK SHEETS OF SUFFICIENT LENGTH TO EXTEND CONTINUOUSLY OVER AT LEAST 3 SPANS WHERE POSSIBLE. DECK SPANNING OVER FEWER THAN 3 SPANS SHALL HAVE THE MINIMUM VERTICAL AND DIAPHRAGM CAPACITY OF THE THREE SPAN CONDITION (INCREASING THE DECK GAUGE OR SHORING THE DECK MAY BE NECESSARY).
3. MINIMUM BEARING OF DECKING ON SUPPORTS SHALL BE 2 INCHES. SHEETS SHALL BE ATTACHED TO ALL SUPPORTING STEEL MEMBERS BY WELDING AS INDICATED ON DRAWINGS AND IN ACCORDANCE WITH MANUFACTURER'S RECOMMENDATIONS. UPON COMPLETION OF ERECTION, ALL WELDS IN EXPOSED DECK AREAS SHALL HAVE TOUCH-UP, DE-SLAG, CLEAN AND PRIME WITH A ZINC RICH PRIMER. DECK WELDING SHALL BE AS NOTED ON PLANS. WHERE NO WELDING IS NOTED, THE SIDE LAP OF EACH PANEL SHALL BE FASTENED BY 1 INCH LONG FILLET WELDS AT 3 FEET ON CENTER MAXIMUM, OR BUTTON PUNCHED AT 18 INCHES ON CENTER.
4. SEE DRAWINGS FOR DETAIL OF REINFORCING OF DECK OPENINGS. SEE ARCHITECTURAL, MECHANICAL, ELECTRICAL DRAWINGS, ETC., FOR SIZE AND LOCATION OF REQUIRED OPENINGS.
5. ALL WELDING OF STEEL DECK SHALL BE PERFORMED BY LIGHT GAUGE WELDERS CERTIFIED BY THE GOVERNING JURISDICTION.

REGISTERED PROFESSIONAL ENGINEER JOHN A. MARTIN No. S6869 STRUCTURAL STATE OF CALIFORNIA

MARTIN & associates
JOHN A. MARTIN & ASSOCIATES
Structural Engineers
950 S. Grand Avenue
Los Angeles, Calif. 90015
Phone (213) 483-6490
Fax (213) 483-3084
J21067

IDENTIFICATION STAMP
DIV. OF THE STATE ARCHITECT
APP: 03-122528 INC:
REVIEWED FOR
SS ☑ FLS ☑ ACS ☑
DATE: 01/06/2025

PTN : 63529-385 FILE: 1.5-H3

HIGHLAND HIGH SCHOOL
CAFETERIA MODERNIZATION
2900 ROYAL SCOTS WAY
FOR
KERN HIGH SCHOOL DISTRICT
BAKERSFIELD, KERN COUNTY, CALIFORNIA

SCA ARCHITECT inc.
1601 NEW STINE ROAD, SUITE 280
BAKERSFIELD, CA 93309
PH: (661) 397-4377
FAX: (661) 397-4378
WWW.SCARCHITECT.COM
LICENSED ARCHITECT STEPHEN J. CORBIN No. C16286 Exp. 12/31/25 STATE OF CALIFORNIA
STEPHEN J. CORBIN, NCARB, AIA, LEED ®-AP

CHECK AND VERIFY ALL DIMENSIONS BEFORE PROCEEDING WITH THE WORK. REPORT DISCREPANCIES TO THE ARCHITECT. ALL CONSTRUCTION SHALL CONFORM TO THE C.B.C.

KERN HIGH SCHOOL DISTRICT Tradition of Excellence Est. 1897

GENERAL NOTES

MARK	DATE	REVISIONS
1		
2		
3		

JOB NO. J21067
DRAWN: JAMA
CHECKED: JAMA
DATE: 08/11/23

S
0.2
OF SHEETS

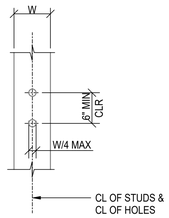

ELEVATION STUD 3C

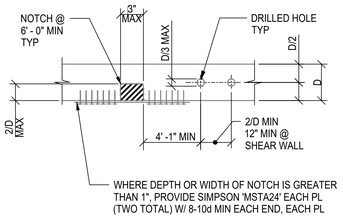

PLAN DOUBLE TOP PLATE 3B

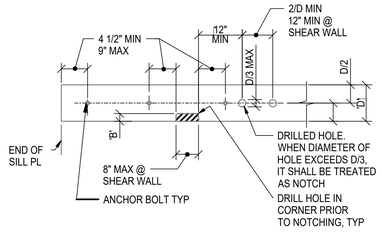

PLAN SILL PLATE 3A

HOLES AND NOTCHES IN PLATES AND STUDS 3

TENSION DEVELOPMENT LENGTH SCHEDULE (Ld)		
BAR SIZE	f'c=4000 PSI	
	TOP BARS	OTHER BARS
#3	19	15
#4	25	19
#5	31	24
#6	37	29

BAR SPLICE LENGTH SCHEDULE (Ls)		
BAR SIZE	f'c=4000 PSI	
	TOP BARS	OTHER BARS
#3	24	19
#4	32	25
#5	40	31
#6	48	37

HORIZONTAL BARS
WALL OR SLAB SPLICE DETAIL

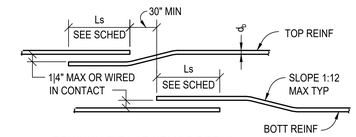

TENSION TIE LAP SPLICE DETAIL

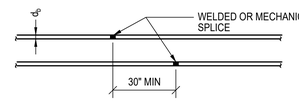

WELDED OR MECHANICAL SPLICE

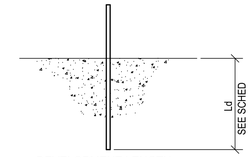

DEVELOPMENT LENGTH
STRAIGHT BAR

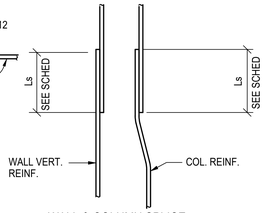

WALL & COLUMN SPLICE

NOTES:
1. LAP SPLICES ARE SHOWN ON DWGS. WHERE NO LAP LENGTH IS SHOWN, USE THIS SCHEDULE.
2. BAR SPLICE SCHEDULE BASED ON CASE #1, LAP CLASS B
3. C-C BARS MUST BE $3.0d_b$ MIN BY CODE = CASE 1
4. BAR COVER ON BMS & COLS 1 1/2" + 1/2" = 2" > d_b = CASE 1 REQUIRED LAP LENGTH.
5. TABULATED VALUES ARE IN INCHES AND ARE BASED ON GRADE 60 REINFORCING (NOT COATED), NORMAL WEIGHT CONCRETE PER ACI 318-14. USE THESE VALUES ONLY WHERE LENGTHS ARE NOT INDICATED ON THE DWGS.
6. TOP BARS ARE HORIZONTAL BARS SO PLACED THAT MORE THAN 12" OF CONCRETE IS CAST IN THE MEMBER BELOW THE BAR.
7. INCREASE SCHEDULED LENGTHS BY 30% FOR LIGHTWEIGHT CONCRETE.
8. THE SMALLER BAR LAP LENGTH SHALL BE USED WHEN SPLICING DIFFERENT SIZE BARS.
9. THE CONTRACTOR, AT THEIR OPTION, MAY USE A BUTT WELDED SPLICE, OR APPROVED MECHANICAL IN LIEU OF THE LAP SPLICE SHOWN-SEE TYPICAL WELDED SPLICE DETAIL.
10. ALL DETAILING AND PLACING OF REINFORCING SHALL COMPLY WITH THE PLANS AND DETAILS.
11. BUNDLED BAR SPLICES:
    a. INDIVIDUAL BAR SPLICES WITHIN THE BUNDLE SHALL NOT OVERLAP EACH OTHER.
    b. INCREASE LAP LENGTH 20% AT THREE BAR BUNDLES.
    c. INCREASE LAP LENGTH 33% AT FOUR BAR BUNDLES

REGULAR WEIGHT CONCRETE REINFORCING DEVELOPMENT LENGTH & SPLICE LENGTH SCHEDULE 6

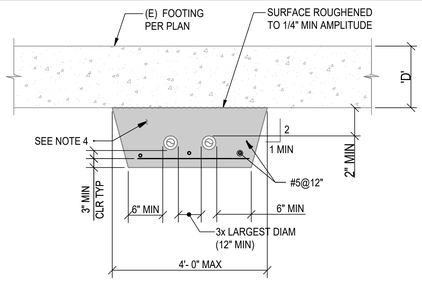

PERPENDICULAR TO FOOTING

NOTES:
1. DO NOT PASS PIPES/CONDUITS UNDER OR THROUGH ISOLATED SPREAD FOOTINGS UNLESS SPECIFICALLY NOTED ON PLAN
2. PROVIDE METAL OR PVC SLEEVES (SCH 40 MIN) WITH ID 2" GREATER THAN THE OD OF THE PIPES/CONDUITS PASSING THROUGH CONCRETE.
3. CLEARANCE BETWEEN ADJACENT SLEEVES SHALL BE NOT LESS THAN DIA OF LARGER SLEEVE OR 6" MINIMUM.
4. FOR PIPES/CONDUITS BELOW FOOTINGS, EXCAVATE AS SHOWN AND FILL WITH CONCRETE (SAME STRENGTH AS FOOTINGS).THE CONTRACTOR IS RESPONSIBLE FOR MEANS AND METHODS OF EXCAVATION INCLUDING DESIGN/INSTALLATION OF EARTH SHORING WHERE REQUIRED. COORDINATE PROCEDURE WITH GEOTECH PRIOR EXCAVATION
5. THE TERMS "PIPES" & "CONDUITS" ARE SYNONYMS.

PIPE / CONDUIT PENETRATION AT FOOTING 8

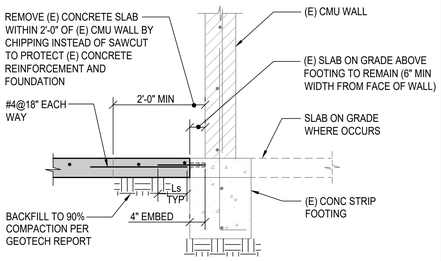

NOTE:
DRILL AND EPOXY WITH SIMPSON
SET-XP, PULL TEST VALUE = 1172LBS

REPAIR OF EXISTING SLAB ON GRADE AT CMU WALL 15

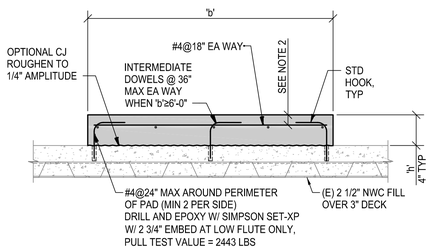

NOTES:
1. SEE ARCH'L AND MEP DRAWINGS FOR SIZE AND LOCATIONS OF ALL HOUSEKEEPING PADS
2. PROVIDE MINIMUM CLEAR COVER PER GENERAL NOTES. ADJUST AS REQ'D TO ACCOMMODATE POST-INSTALLED ANCHORS WHERE OCCURS. TOP CLEAR COVER SHALL NOT EXCEED 'h'/2.

HOUSEKEEPING PAD ON (E) CONC TOPPED METAL DECK 14

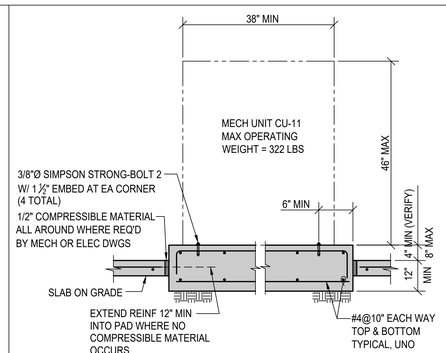

NOTE:
SEE MECHANICAL AND ELECTRICAL DRAWINGS FOR THE FOLLOWING:
1. LOCATION AND DIMENSIONS OF PADS AND BASES
2. DETAILS OF CURBS AND EQUIPMENT

EQUIPMENT PAD AND ANCHORAGE AT SLAB ON GRADE 13

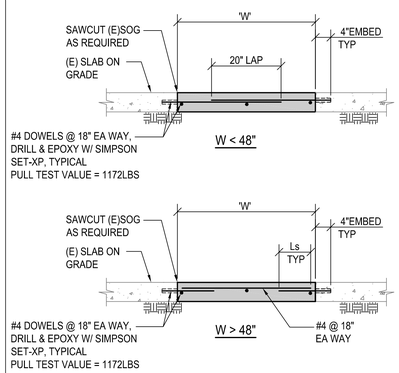

NOTE: NO SAWCUT WITHIN 2'-0" OF EXISTING CMU WALL SEE 15/S1.1

TYPICAL REPAIR OF EXISTING SLAB ON GRADE 12

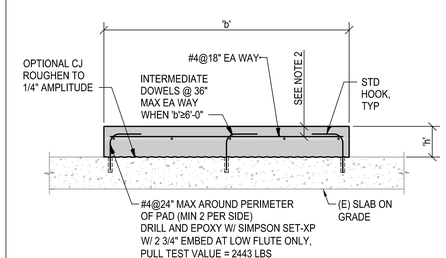

NOTES:
1. SEE ARCH'L AND MEP DRAWINGS FOR SIZE AND LOCATIONS OF ALL HOUSEKEEPING PADS
2. PROVIDE MINIMUM CLEAR COVER PER GENERAL NOTES. ADJUST AS REQ'D TO ACCOMMODATE POST-INSTALLED ANCHORS WHERE OCCURS. TOP CLEAR COVER SHALL NOT EXCEED 'h'/2.

EQUIPMENT PAD ON (E) SLAB ON GRADE 17

IDENTIFICATION STAMP
DIV. OF THE STATE ARCHITECT
APP: 03-122528 INC:
REVIEWED FOR
SS ☑ FLS ☑ ACS ☑
DATE: 01/06/2025

PTN : 63529-385 FILE: 1.5-H3

HIGHLAND HIGH SCHOOL
CAFETERIA MODERNIZATION
2900 ROYAL SCOTS WAY
FOR
KERN HIGH SCHOOL DISTRICT
BAKERSFIELD, KERN COUNTY, CALIFORNIA

ARCHITECT S inc.
1601 NEW STINE ROAD, SUITE 280
BAKERSFIELD, CA 93309
PH: (661) 397-4377
FAX: (661) 397-4378
WWW.SCARCHITECT.COM
STEPHEN J. CORBIN, NCARB, AIA, LEED ®-AP

CHECK AND VERIFY ALL DIMENSIONS BEFORE PROCEEDING WITH THE WORK. REPORT DISCREPANCIES TO THE ARCHITECT. ALL CONSTRUCTION SHALL CONFORM TO THE C.B.C.

KERN HIGH SCHOOL DISTRICT
Tradition of Excellence

TYPICAL DETAILS

MARK	DATE	REVISIONS
1		
2		
3		

JOHN A. MARTIN & ASSOCIATES
Structural Engineers
950 S. Grand Avenue
Los Angeles, Calif. 90015
Phone (213) 483-6490
Fax (213) 483-3084
J21067

JOB NO.	J21067
DRAWN :	JAMA
CHECKED :	JAMA
DATE :	08/11/23

S

1.1
OF SHEETS

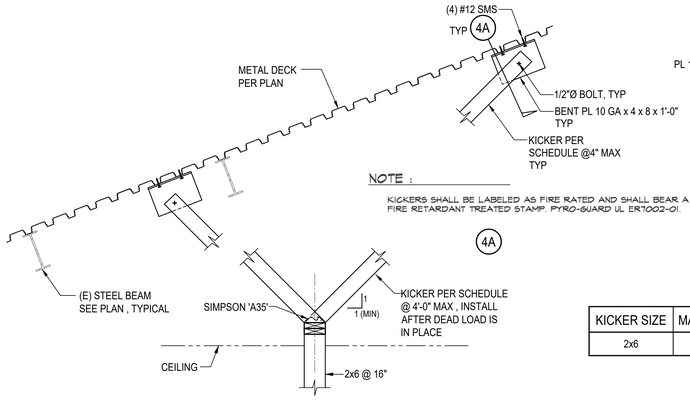

NOTE :

KICKERS SHALL BE LABELED AS FIRE RATED AND SHALL BEAR A FIRE RETARDANT TREATED STAMP. PYRO-GUARD UL ER1002-01.

KICKER SIZE	MAX LENGTH
2x6	14'-6"

BRACING CONNECTIONS FOR NON-BEARING WALLS (4)

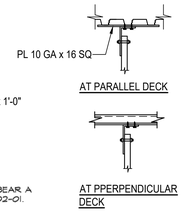

SECTION 4A

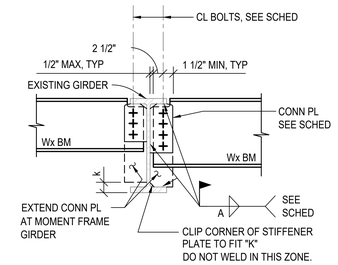

TYPICAL BEAM (A)

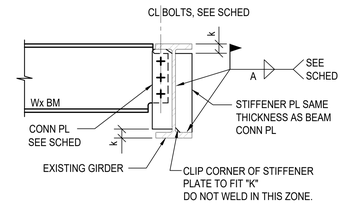

ONE SIDE BEAM CONNECTION (B)

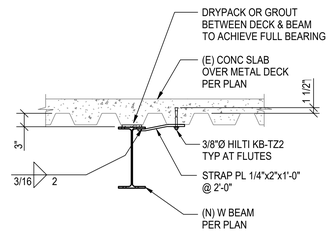

TOP FLANGE RESTRAINING AT NEW BEAM (C)

SIMPLE BEAM CONNECTION SCHEDULE			
SHEAR PL CONNECTION			
MEMBER (DEPTH)	# OF BOLTS	CONN PLATE t	WELD SIZE A
12"	3	5/16"	1/4"

NOTES:

1. FILLET WELD SIZE SHALL BE AS SHOWN UNLESS A GREATER SIZE IS REQUIRED BY AISC TABLE J2.4.
2. ALL BOLTS ARE 7/8"Ø (UNLESS NOTED OTHERWISE) AND ARE TO BE A325 BOLTS, SLIP CRITICAL (SC).
3. BOLT SPACING TO BE 3 TIMES BOLT DIAMETER, 3" MINIMUM, UNLESS NOTED OTHERWISE.
4. DOUBLE ANGLES MAY BE SUBSTITUTED FOR CONNECTOR PLATES, PROVIDED THEY MEET OR EXCEED THE REQUIREMENTS OF THE AISC.
5. REMOVE FIREPROOFING AS NEEDED TO INSTALL NEW BEAMS AND REPAIR AS REQUIRED
6. REFER BACK TO ARCHITECTURAL DRAWINGS FOR FIREPROOFING DETAILS
7. PROVIDE SLIP CRITICAL CONNECTIONS AT ALL DRAG CONNECTIONS NOTED ON PLANS

SIMPLE BEAM CONNECTION DETAILS (6)

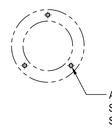

EF-1 ANCHOR PLAN VIEW

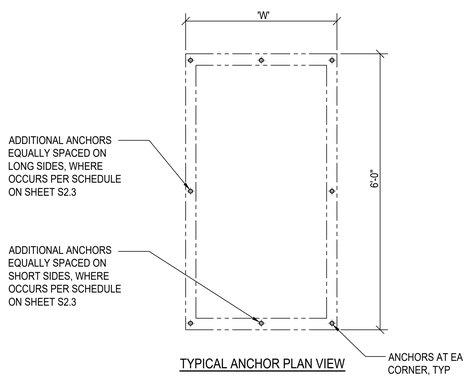

TYPICAL ANCHOR PLAN VIEW

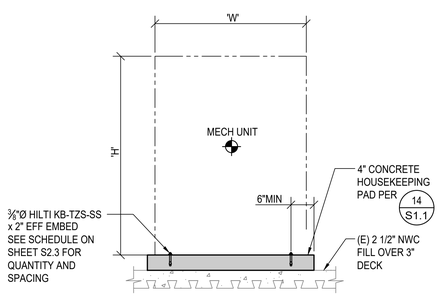

PAD MOUNTED EQUIPMENT

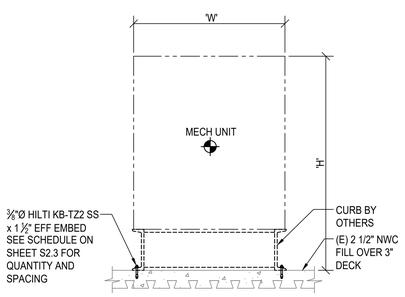

CURB MOUNTED EQUIPMENT

TYPICAL ROOF EQUIPMENT ANCHORAGE (14)

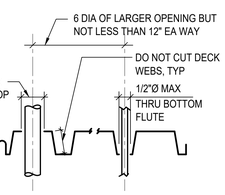

TYPE B DECK

IF OPENING ARE CLOSER OR LARGER THAN SHOWN, REINFORCE DECK - SEE OTHER DETAILS

UNREINFORCED OPENING AT METAL DECK WITHOUT TOPPING (13)

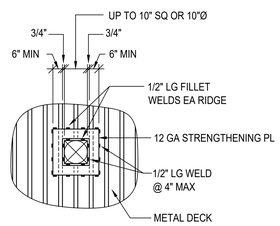

SMALL REINFORCED DECK OPENING UP TO 9" MAX (12)

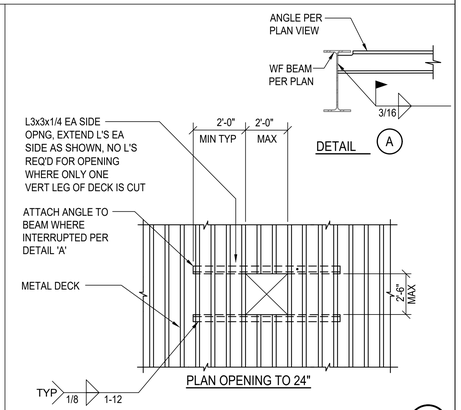

PLAN OPENING TO 24"

OPENINGS IN METAL DECK (11)

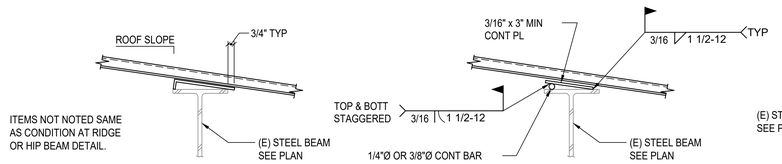

AT BEAM PERPENDICULAR TO DECK SPAN

ALTERNATE CONNECTION AT BEAM PERPENDICULAR TO DECK SPAN

AT RIDGE OR HIP BEAM

NOTES:
1. DETAIL APPLIES WHERE (E) BEAM TOP FLANGE IS NOT CANTED. CONTRACTOR TO VERIFY EXISTING CONDITIONS IN THE FIELD.
2. USE BENT PL WHEN DECK SLOPE RELATIVE TO ROOF BEAM IS 1/2" TO 12" AND GREATER.

DETAIL FOR LEVEL BEARING OF METAL DECK (18)

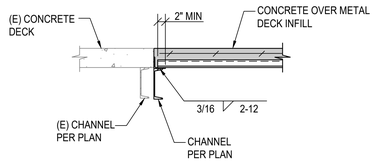

NOTE:
FOR BALANCE OF INFO SEE 16 S1.2

SECTION AT METAL DECK OPENING INFILL SUPPORT (17)

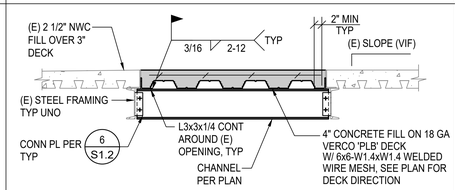

NOTE: PROVIDE 1/2"Ø EFF ARC SPOT WELDS AT LOW FLUTES FOR DECK ATTACHMENT IN PERPENDICULAR DIRECTION

METAL DECK OPENING INFILL DETAIL (16)

IDENTIFICATION STAMP
DIV. OF THE STATE ARCHITECT
APP: 03-122528 INC:
REVIEWED FOR
SS ☑ FLS ☑ ACS ☑
DATE: 01/06/2025

PTN : 63529-385 FILE: 15-H3

HIGHLAND HIGH SCHOOL
CAFETERIA MODERNIZATION
2900 ROYAL SCOTS WAY
FOR
KERN HIGH SCHOOL DISTRICT
BAKERSFIELD, KERN COUNTY, CALIFORNIA

ARCHITECT inc.
1601 NEW STINE ROAD, SUITE 280
BAKERSFIELD, CA 93309
PH: (661) 397-4377
FAX: (661) 397-4378
WWW.SCARCHITECT.COM
LICENSED ARCHITECT STEPHEN J. CORBIN No. C-16728 Exp. 12/31/25 STATE OF CALIFORNIA
STEPHEN J. CORBIN, NCARB, AIA, LEED BD+C-AP

CHECK AND VERIFY ALL DIMENSIONS BEFORE PROCEEDING WITH THE WORK. REPORT DISCREPANCIES TO THE ARCHITECT. ALL CONSTRUCTION SHALL CONFORM TO THE C.B.C.

KERN HIGH SCHOOL DISTRICT — Tradition of Excellence — Est. 1893

TYPICAL DETAILS

MARK	DATE	REVISIONS
1		
2		
3		

LICENSED PROFESSIONAL ENGINEER JOHN A. MARTIN No. S6869 Exp. 6-30-24 STATE OF CALIFORNIA
MARTIN & associates
JOHN A. MARTIN & ASSOCIATES
Structural Engineers
950 S. Grand Avenue
Los Angeles, Calif. 90015
Phone (213) 483-6490
Fax (213) 483-3084
J21067

JOB NO. J21067
DRAWN: JAMA
CHECKED: JAMA
DATE: 08/11/23

S

1.2
OF SHEETS

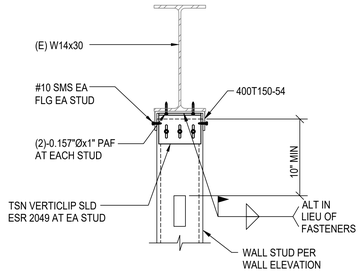

NOTES:
REMOVE (E) TOP CONNECTION PRIOR TO INSTALLATION OF NEW WALL STUDS AND NEW TOP CONNECTION

WALL TOP CONNECTION AT (E) STEEL BEAM (5)

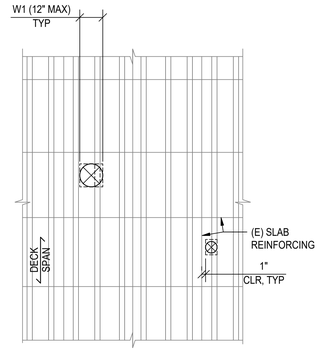

PLAN

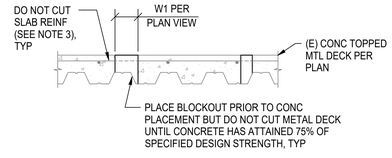

SECTION

OPENINGS ≤ 12" AND OPENING GROUPS NOT INTERRUPTING TYPICAL DECK REINFORCING (16A)

NOTES:
1. REFER TO ARCH'L AND MEP DRAWINGS FOR SIZE AND LOCATION OF ALL OPENINGS, PIPE/CONDUIT PENETRATIONS, AND FLOOR BOXES.
2. SCAN (E) CONCRETE OVER METAL DECK TO PREVENT INTERRUPTING EXISTING SLAB REINFORCING.

OPENINGS IN CONCRETE TOPPED METAL DECK (3)

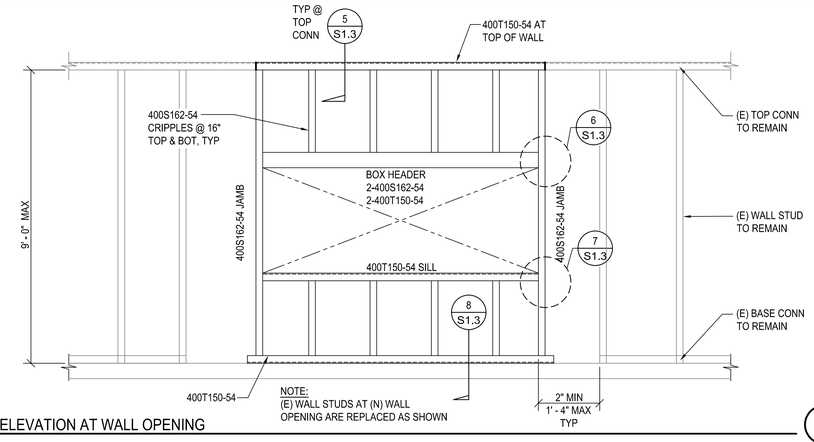

NOTE:
(E) WALL STUDS AT (N) WALL OPENING ARE REPLACED AS SHOWN

WALL ELEVATION AT WALL OPENING (1)

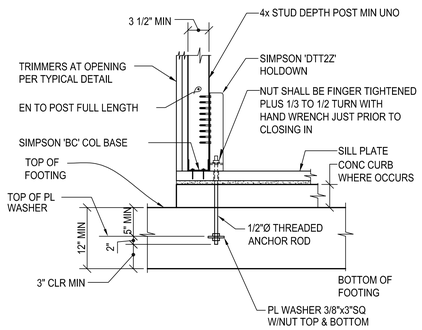

NOTES:
1. TO PROPERLY LOCATE HOLDOWN ANCHOR RODS, THE CONTRACTOR SHALL CAREFULLY COORDINATE STRUCTURAL FRAMING WITH LOCATION OF ARCHITECTUAL OPENINGS BEFORE PLACING BOLTS.
2. PLACE ANCHORS ON THE OUTSIDE ENDS OF THE PANELS WHERE POSSIBLE.
3. PLACE HOLDOWN ANCHOR AT CL OF STUD.
4. 5" MINIMUM EDGE DISTANCE FROM CENTER LINE OF ANCHOR ROD TO EDGE OF CONCRETE TYPICAL EACH WAY

HOLDOWN ANCHOR (9)

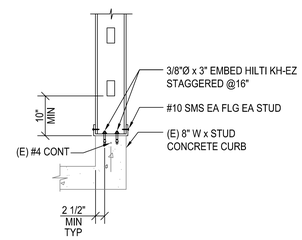

NOTES:
1. LOCATE FASTENER 3" MIN-8" MAX FROM EA END OF TRACK.
2. CONTRACTOR SHALL LOCATE EXISTING REBAR BY NON DESTRUCTIVE MEANS BEFORE DRILLING FOR NEW ANCHORS TO AVOID DAMAGING EXISTING STEEL

WALL BASE (8)

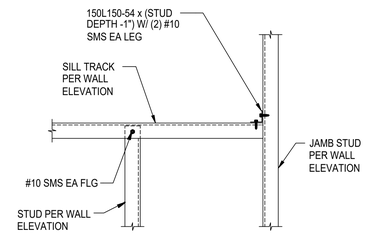

NOTES:
ANGLE CLIP MAY BE ORIENTED DOWNWARD BELOW TRACK AT CONTRACTOR'S OPTION

TYPICAL SILL (7)

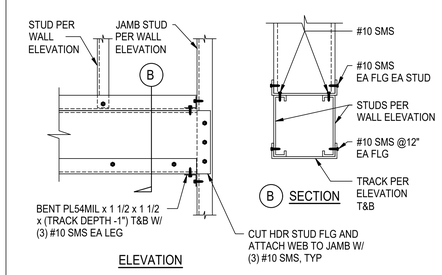

BUILT-UP BOX HEADER (6)

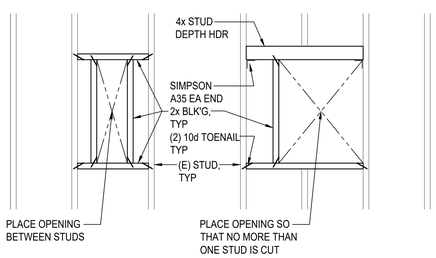

(A) OPENING BETWEEN STUDS (B) OPENING CUTTING ONE STUD

SMALL OPENING IN NON-BEARING STUD WALL (15)

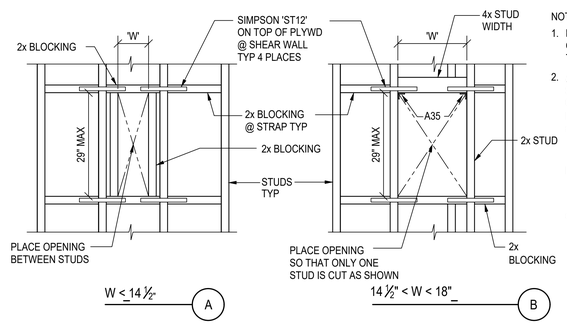

NOTES:
1. BLOCKING AND STRAPS MAY BE OMITTED FOR OPENING LESS THAN 8"x8"
2. AT SHEAR WALL, UNLESS SPECIFICALLY SHOWN ON ON STRUCTURAL PLAN AND/OR ELEVATIONS.
   a. NO MORE THAN ONE OPENING MAY BE PLACED IN EVERY 20'-0" WALL
   b. NO OPENING SHALL BE PLACED IN SHEAR WALL LESS THAN 10'-0"
   c. OPENINGS SHOWN BY OTHERS NOT MEETING ABOVE CRITERIA REQUIRES REVIEW AND APPROVAL BY THE STRUCTURAL ENGINEER.

SMALL OPENING IN STUD WALL (13)

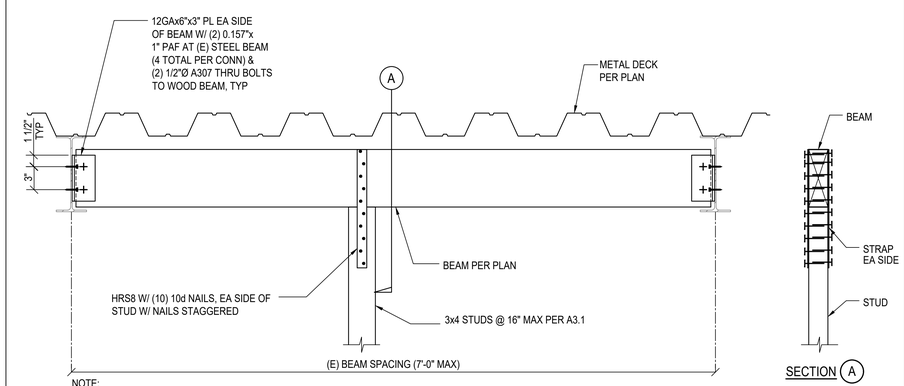

NOTE:
FOR SOFFIT BRACING SEE 4/S1.2

BLOCKING AT HANGING SOFFIT (11)

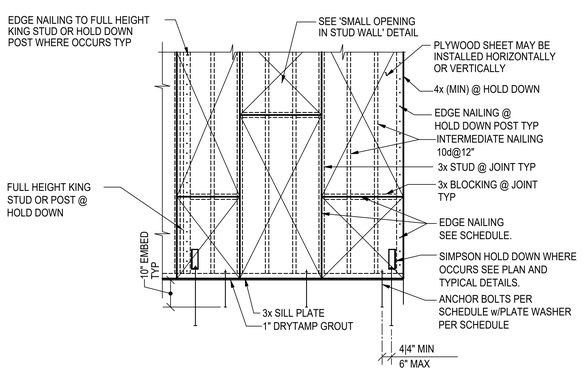

PLYWOOD SHEAR PANEL SCHEDULE			
MARK	EDGE NAILING (EN)	ANCHOR BOLTS	REMARKS
EN XX	8d @ 6"	5/8" Ø @ 48"	-

NOTES:
1. ALL PLYWOOD TO BE 15/32" PLYWOOD UNO
2. NO PLYWOOD TO BE LESS THAN 2'-0" x 4'-0".
3. ALL NAILING TO BE ½" MIN TO EDGE OF SUPPORT AND SHEET.
4. PROVIDE ⅛" GAP BETWEEN PLYWOOD SHEETS.
5. SHEATH ENTIRE WALL INCLUDING ABOVE AND BELOW OPENING TO AVOID LETTING IN OF PLYWOOD SHEATHING WITH SAME NAILING AS SHOWN IN SCHEDULE.
6. SHEAR WALLS MORE THAN ONE VERTICAL PANEL IN HEIGHT SHALL HAVE EITHER VERTICAL OR HORIZONTAL STAGGERED SPLICED JOINTS.

SHEAR PANEL MARK
APPROXIMATE PANEL LENGTH (SHOWN ON PLAN)

PLATE WASHER SCHEDULE	
NOMINAL STUD WIDTH	PLATE WASHER SIZE
6"	3 GA x4 1/2"x4 1/2"

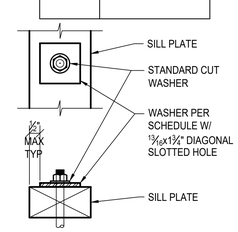

SHEAR PANEL (17)

IDENTIFICATION STAMP
DIV. OF THE STATE ARCHITECT
APP: 03-122528 INC:
REVIEWED FOR
SS ☑ FLS ☑ ACS ☑
DATE: 01/06/2025

PTN : 63529-385 FILE: 1.5-H3

HIGHLAND HIGH SCHOOL
CAFETERIA MODERNIZATION
2900 ROYAL SCOTS WAY
FOR
KERN HIGH SCHOOL DISTRICT
BAKERSFIELD, KERN COUNTY, CALIFORNIA

ARCHITECT S inc.
1601 NEW STINE ROAD, SUITE 280
BAKERSFIELD, CA 93309
PH: (661) 397-4377
FAX: (661) 397-4378
WWW.SCARCHITECT.COM
LICENSED ARCHITECT STEPHEN J. CORBIN C-16788 STATE OF CALIFORNIA
STEPHEN J. CORBIN, NCARB, AIA, LEED BD+C-AP

CHECK AND VERIFY ALL DIMENSIONS BEFORE PROCEEDING WITH THE WORK. REPORT DISCREPANCIES TO THE ARCHITECT. ALL CONSTRUCTION SHALL CONFORM TO THE C.B.C.

KERN HIGH SCHOOL DISTRICT — Tradition of Excellence — Est. 1931

TYPICAL DETAILS

MARK	DATE	REVISIONS
1		
2		
3		

LICENSED PROFESSIONAL ENGINEER JOHN MARTIN No. S6869 STRUCTURAL STATE OF CALIFORNIA
MARTIN & associates
JOHN A. MARTIN & ASSOCIATES Structural Engineers
950 S. Grand Avenue
Los Angeles, Calif. 90015
Phone (213) 483-6490
Fax (213) 483-3084
J21067

JOB NO. J21067
DRAWN: JAMA
CHECKED: JAMA
DATE: 08/11/23

S

1.3
OF SHEETS

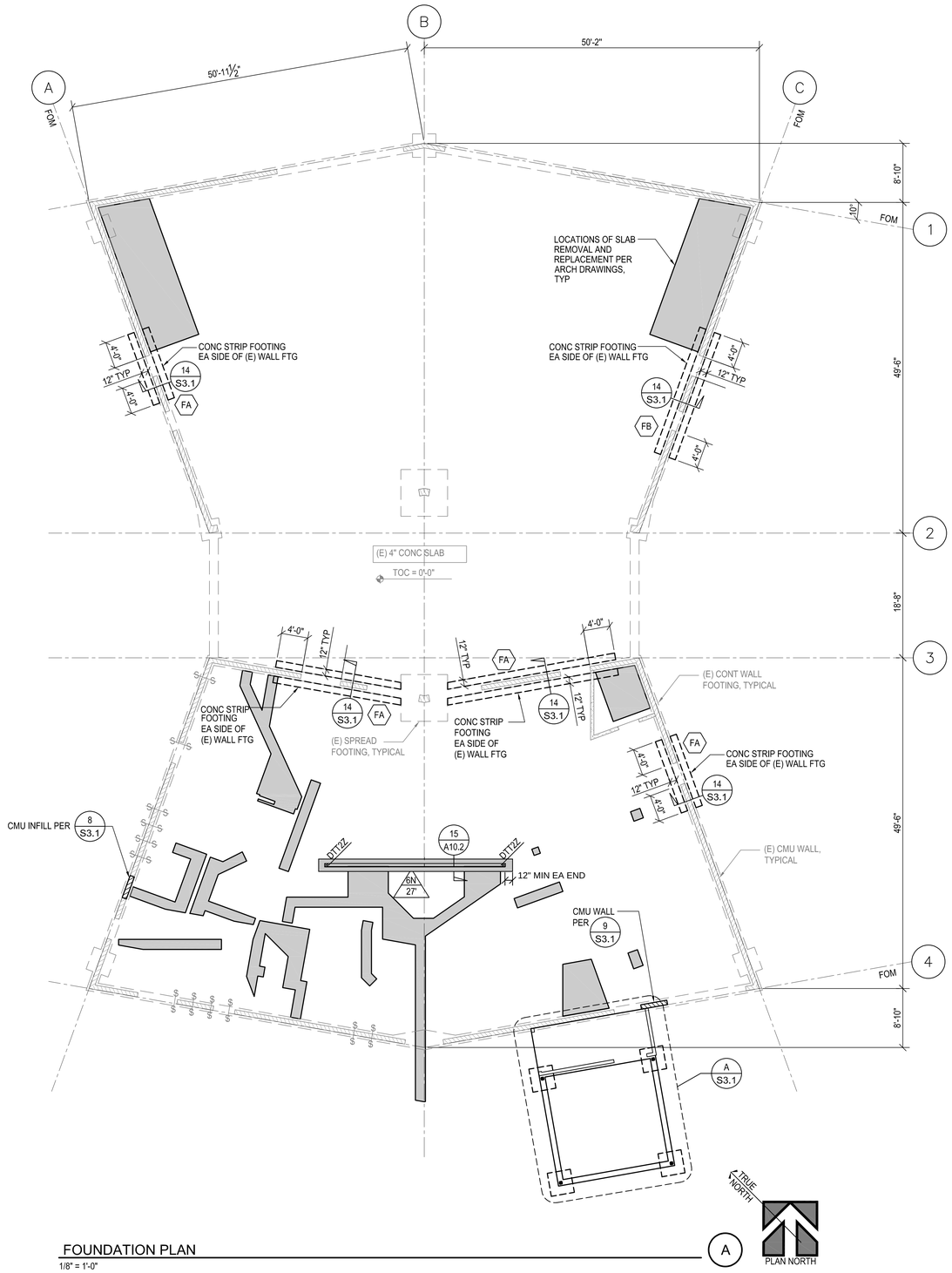

FOUNDATION PLAN

1/8" = 1'-0"

A

PLAN NOTES:

1. REFER TO GENERAL NOTES & TYPICAL DETAILS ON SHEETS S0.1 AND S1.2.
2. REFER TO AND CHECK WITH ARCHITECTURAL DRAWINGS FOR ALL DIMENSIONS.
3. HALFTONE LINES INDICATE EXISTING CONSTRUCTION.

LEGEND:

TOC = X'-XX"	SYMBOL INDICATES BASIC TOP OF CONCRETE SLAB ON GRADE ELEVATION
	INDICATES CONCRETE SLAB ON GRADE REPAIR. SEE DETAIL 12/S1.1 FOR TYPICAL SLAB ON GRADE REPAIR AND 16/S1.1 FOR SLAB ON GRADE REPAIR ADJACENT TO EXISTING CMU WALL.
	INDICATES 8" CMU WALL
	INDICATES 2x6 STUD WALL
FX	INDICATES FOOTING TYPE PER SCHEDULE ON 14/S3.1
X / XX	INDICATES PLYWOOD SHEAR WALL. TYPE AND MINIMUM LENGTH IN FEET. SEE PLAN AND 17/S1.3 FOR TYPICAL PLYWOOD SHEAR WALL UNO
DTTZ	INDICATES HOLDOWN ANCHOR. SEE SCHEDULE ON 9/S1.3
	INDICATES PLYWOOD SHEAR WALL EXTENT.

IDENTIFICATION STAMP
DIV. OF THE STATE ARCHITECT
APP: 03-122528 INC:
REVIEWED FOR
SS ☑ FLS ☑ ACS ☑
DATE: 01/06/2025

PTN : 63529-385 FILE: 1.5-H3

HIGHLAND HIGH SCHOOL

CAFETERIA MODERNIZATION
2900 ROYAL SCOTS WAY
FOR
KERN HIGH SCHOOL DISTRICT
BAKERSFIELD, KERN COUNTY, CALIFORNIA

ARCHITECT S inc.
1601 NEW STINE ROAD, SUITE 280
BAKERSFIELD, CA 93309
PH: (661) 397-4377
FAX: (661) 397-4378
WWW.SCARCHITECT.COM

LICENSED ARCHITECT STEPHEN J. CORBIN C-16728 STATE OF CALIFORNIA

STEPHEN J. CORBIN, NCARB, AIA, LEED ®-AP

CHECK AND VERIFY ALL DIMENSIONS BEFORE PROCEEDING WITH THE WORK. REPORT DISCREPANCIES TO THE ARCHITECT. ALL CONSTRUCTION SHALL CONFORM TO THE C.B.C.

KERN HIGH SCHOOL DISTRICT
Tradition of Excellence
Est. 1893

FOUNDATION PLAN

MARK	DATE	REVISIONS
1		
2		
3		

LICENSED PROFESSIONAL ENGINEER JOHN A. MARTIN No. S6869 STATE OF CALIFORNIA

MARTIN & associates
JOHN A. MARTIN & ASSOCIATES
Structural Engineers
950 S. Grand Avenue
Los Angeles, Calif. 90015
Phone (213) 483-6490
Fax (213) 483-3084
J21067

JOB NO. J21067
DRAWN : JAMA
CHECKED : JAMA
DATE : 08/11/23

S

2.1
OF SHEETS

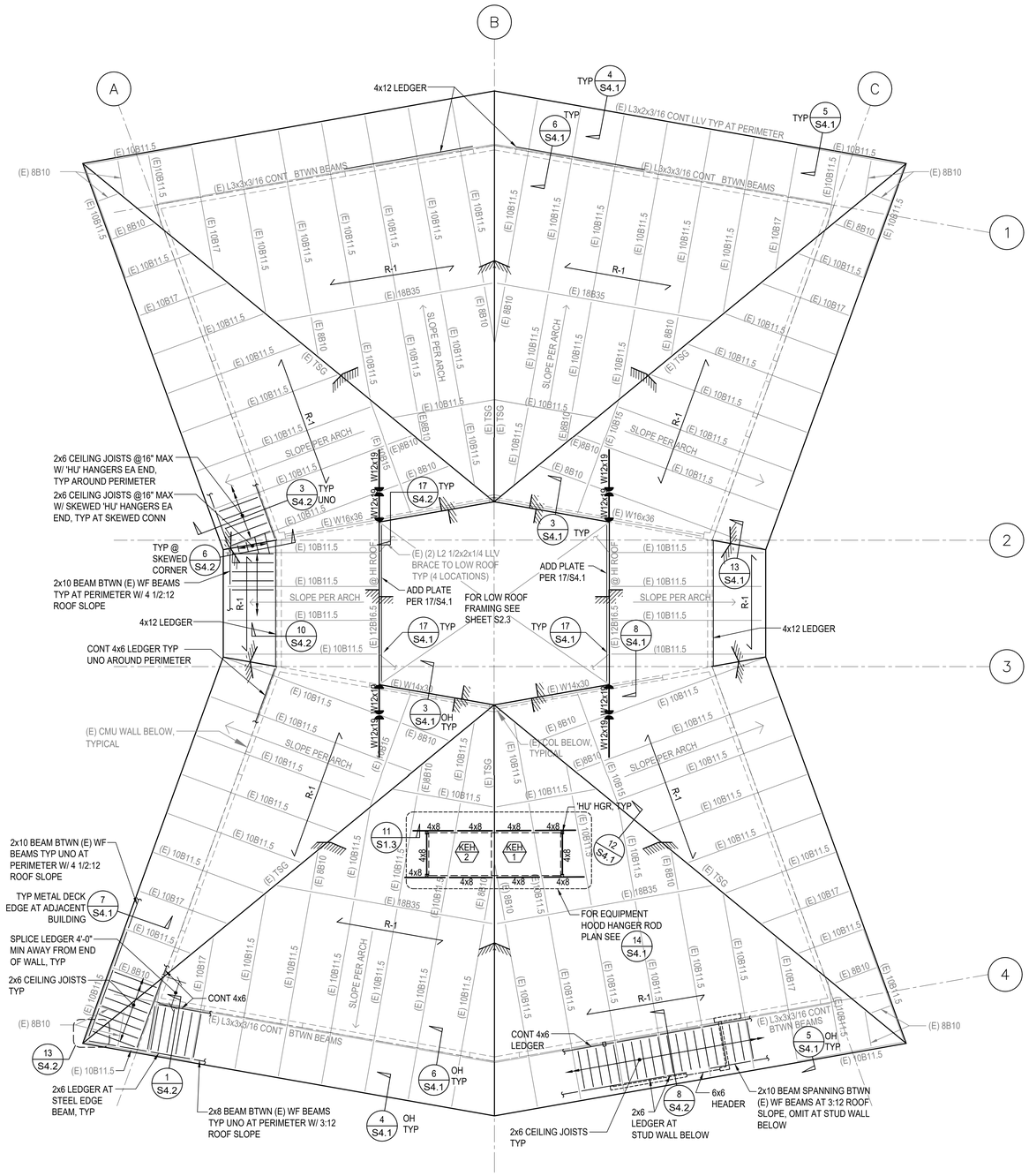

ROOF FRAMING PLAN

1/8" = 1'-0"

B

PLAN NOTES:

1. REFER TO GENERAL NOTES & TYPICAL DETAILS ON SHEETS S0.1 THRU S1.2
2. REFER TO AND CHECK WITH ARCHITECTURAL DRAWINGS FOR ALL DIMENSIONS.
3. REFER TO AND CHECK WITH MECHANICAL DRAWING FOR LOCATIONS OF DUCT OPENINGS, EQUIPMENT SIZE AND LOCATION, ETC. LOCATE SUPPORTING MEMBERS ACCORDINGLY.
4. HALFTONE LINES INDICATE EXISTING CONSTRUCTION.

LEGEND:

R-1 — INDICATES DECK TYPE, SEE 1/S4.1 FOR SCHEDULE AND ATTACHMENT.

XX/X — INDICATES MECHANICAL UNIT. SEE SCHEDULE ON THIS SHEET FOR EQUIPMENT WEIGHTS, COORDINATE WITH MEP DRAWINGS, TYPICAL.

WEIGHT SCHEDULE	
UNIT MARK	MAX OPER WT (LBS)
KEH-1	1000
KEH-2	700

INDICATES DRAG CONNECTION SEE DETAIL 6/S1.2

IDENTIFICATION STAMP
DIV. OF THE STATE ARCHITECT
APP: 03-122528 INC:
REVIEWED FOR
SS ☑ FLS ☑ ACS ☑
DATE: 01/06/2025

PTN : 63529-385 FILE: 15-H3

HIGHLAND HIGH SCHOOL

CAFETERIA MODERNIZATION
2900 ROYAL SCOTS WAY
FOR
KERN HIGH SCHOOL DISTRICT
BAKERSFIELD, KERN COUNTY, CALIFORNIA

SCARCHITECT inc.
1601 NEW STINE ROAD, SUITE 280
BAKERSFIELD, CA 93309
PH: (661) 397-4377
FAX: (661) 397-4378
WWW.SCARCHITECT.COM

LICENSED ARCHITECT STEPHEN J. CORBIN No. C16298 STATE OF CALIFORNIA

STEPHEN J. CORBIN, NCARB, AIA, LEED BD+C-AP

CHECK AND VERIFY ALL DIMENSIONS BEFORE PROCEEDING WITH THE WORK. REPORT DISCREPANCIES TO THE ARCHITECT. ALL CONSTRUCTION SHALL CONFORM TO THE C.B.C.

KERN HIGH SCHOOL DISTRICT — Tradition of Excellence — Est. 1897

ROOF FRAMING PLAN

MARK	DATE	REVISIONS
1		
2		
3		

LICENSED PROFESSIONAL ENGINEER JOHN A. MARTIN No. S6869 STATE OF CALIFORNIA

MARTIN & associates
JOHN A. MARTIN & ASSOCIATES
Structural Engineers
950 S. Grand Avenue
Los Angeles, Calif. 90015
Phone (213) 483-6490
Fax (213) 483-3084
J21067

JOB NO. J21067
DRAWN: JAMA
CHECKED: JAMA
DATE: 08/11/23

S

2.2

OF SHEETS

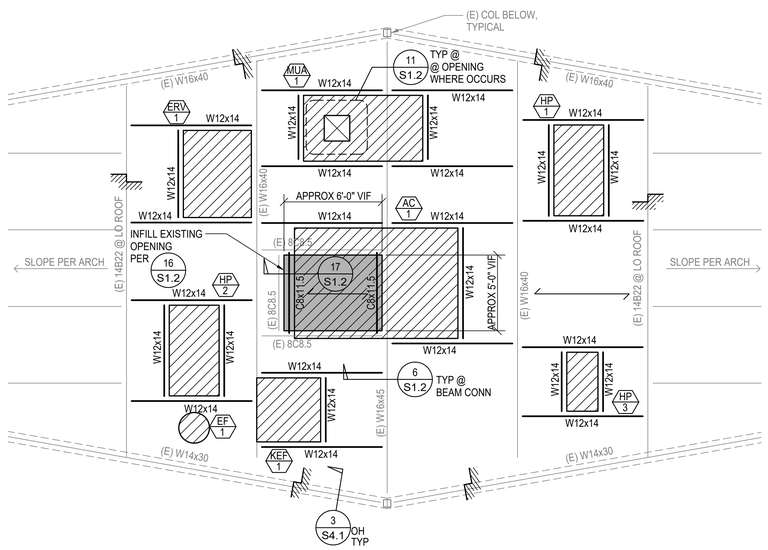

PARTIAL LOW ROOF FRAMING PLAN

1/4" = 1'-0"

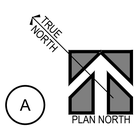

ROOF FRAMING NOTES:

1. REFER TO GENERAL NOTES & TYPICAL DETAILS ON SHEETS S0.1 AND S1.2.
2. REFER TO AND CHECK WITH ARCHITECTURAL DRAWINGS FOR ALL DIMENSIONS.
3. REFER TO AND CHECK WITH MECHANICAL DRAWING FOR LOCATIONS OF DUCT OPENINGS, EQUIPMENT SIZE AND LOCATION, ETC. LOCATE SUPPORTING MEMBERS ACCORDINGLY.

LEGEND:

HATCHED AREA INDICATES EXISTING OPENING INFILL. SEE DETAIL 16/S1.2.

HATCHED AREA INDICATES MECH UNIT SEE MECHANICAL DRAWINGS FOR EXACT LOCATION. SEE DETAIL 14/S1.2. FOR ANCHORAGE

INDICATES METAL DECK ORIENTATION.

XX X INDICATES MECHANICAL UNIT. SEE SCHEDULE ON THIS SHEET FOR EQUIPMENT WEIGHTS, COORDINATE WITH MEP DRAWINGS, TYPICAL.

ROOF EQUIPMENT SCHEDULE

UNIT MARK	MAX OPER WT (LBS)	MAX HEIGHT 'H'	MAX WIDTH 'W'	ANCHOR LAYOUT 14 S1.2
CURB MOUNTED EQUIPMENT				
AC-1	2500	47.75	86.375	5 EA LONG SIDE, 10 TOTAL
EF-1	45	28.25	19	3 TOTAL
ERV-1	1400	62.6	53.2	3 EA LONG SIDE, 3 EA SHORT SIDE 12 TOTAL
PAD MOUNTED EQUIPMENT				
HP-1	838	72.9	29.7	EA CORNER, 4 TOTAL
HP-2	838	72.9	29.7	EA CORNER, 4 TOTAL
HP-3	146	21.8	13.6	EA CORNER, 4 TOTAL
KEF-1	443	71.8	27.875	SEE M5.2
MUA-1	632	36.75	37.375	SEE M5.3

NOTE : MAX OPERATING WEIGHT INCLUDES TOTAL WEIGHT OF UNIT AND CURB

IDENTIFICATION STAMP
DIV. OF THE STATE ARCHITECT
APP: 03-122528 INC:
REVIEWED FOR
SS ☑ FLS ☑ ACS ☑
DATE: 01/06/2025

PTN : 63529-385 FILE: 1.5-H3

HIGHLAND HIGH SCHOOL

CAFETERIA MODERNIZATION
2900 ROYAL SCOTS WAY
FOR
KERN HIGH SCHOOL DISTRICT
BAKERSFIELD, KERN COUNTY, CALIFORNIA

SCARCHITECT inc.
1601 NEW STINE ROAD, SUITE 280
BAKERSFIELD, CA 93309
PH: (661) 397-4377
FAX: (661) 397-4378
WWW.SCARCHITECT.COM
STEPHEN J. CORBIN, NCARB, AIA, LEED ®-AP

CHECK AND VERIFY ALL DIMENSIONS BEFORE PROCEEDING WITH THE WORK. REPORT DISCREPANCIES TO THE ARCHITECT. ALL CONSTRUCTION SHALL CONFORM TO THE C.B.C.

KERN HIGH SCHOOL DISTRICT
Tradition of Excellence

PARTIAL LOW ROOF FRAMING PLAN

MARK	DATE	REVISIONS
1		
2		
3		

MARTIN & associates
JOHN A. MARTIN & ASSOCIATES
Structural Engineers
950 S. Grand Avenue
Los Angeles, Calif. 90015
Phone (213) 483-6490
Fax (213) 483-3084
J21067

REGISTERED PROFESSIONAL ENGINEER JOHN MARTIN No. S6869 STRUCTURAL STATE OF CALIFORNIA

JOB NO. J21067
DRAWN : JAMA
CHECKED : JAMA
DATE : 08/11/23

S

2.3
OF SHEETS

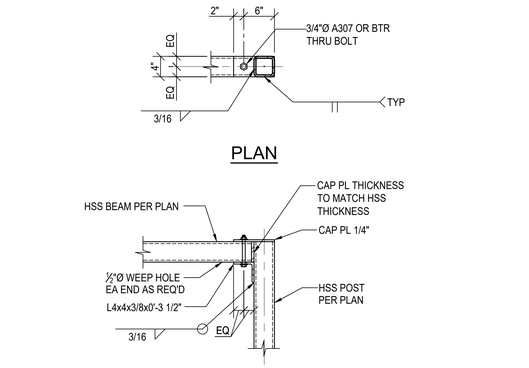

CONNECTION DETAIL (5)
1" = 1'-0"

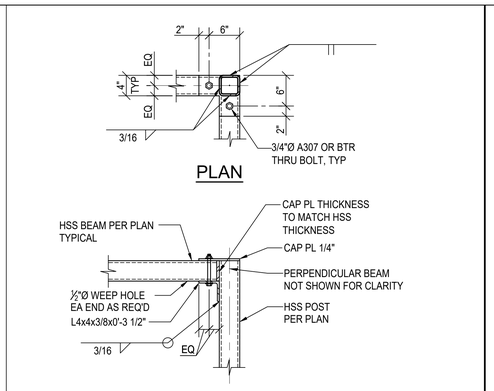

CONNECTION DETAIL (4)
1" = 1'-0"

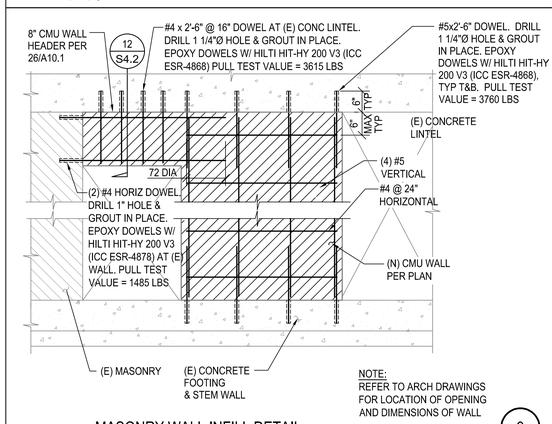

NOTE:
REFER TO ARCH DRAWINGS FOR LOCATION OF OPENING AND DIMENSIONS OF WALL

MASONRY WALL INFILL DETAIL (9)
NTS

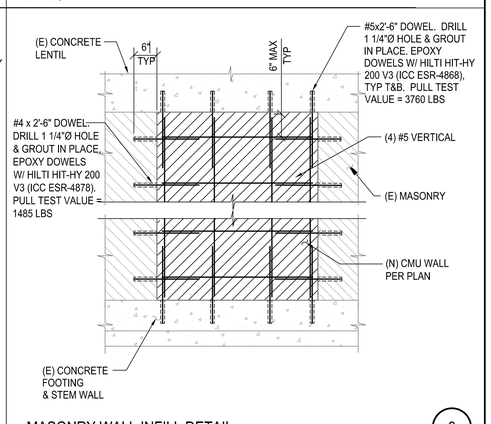

MASONRY WALL INFILL DETAIL (8)
NTS

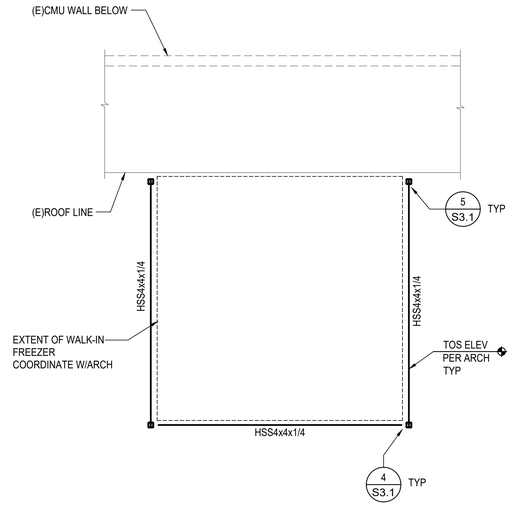

PLAN NOTES:

1. REFER TO GENERAL NOTES & TYPICAL DETAILS ON SHEETS S0.1 AND S1.1.
2. REFER TO AND CHECK WITH ARCHITECTURAL DRAWINGS FOR ALL DIMENSIONS.

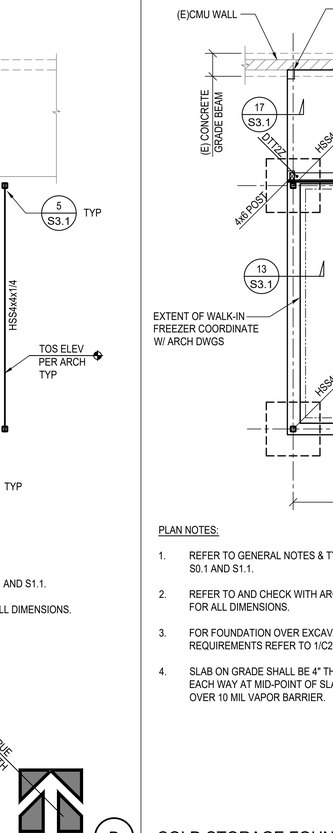

COLD STORAGE ROOF FRAMING PLAN (B)
1/4" = 1'-0"

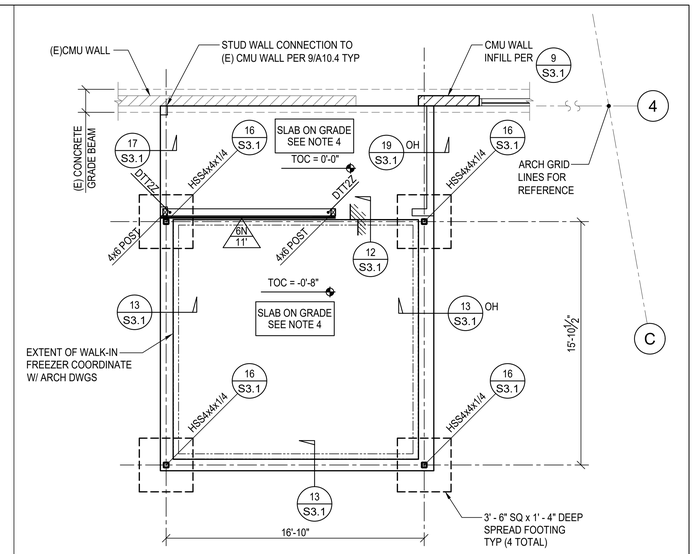

PLAN NOTES:

1. REFER TO GENERAL NOTES & TYPICAL DETAILS ON SHEETS S0.1 AND S1.1.
2. REFER TO AND CHECK WITH ARCHITECTURAL DRAWINGS FOR ALL DIMENSIONS.
3. FOR FOUNDATION OVER EXCAVATION AND SOIL COMPACT REQUIREMENTS REFER TO 1/C2.
4. SLAB ON GRADE SHALL BE 4" THICK CONCRETE WITH #4 @ 18" EACH WAY AT MID-POINT OF SLAB OVER 2" SAND LAYER OVER 10 MIL VAPOR BARRIER.

LEGEND:

- TOC = 0'-0" — INDICATES BASIC TOP OF CONCRETE SLAB ON GRADE ELEVATION. SEE ARCHITECTURAL DRAWINGS FOR EXACT LOCATION.
- XX/XX — PLYWOOD SHEAR WALL. TYPE AND MINIMUM LENGTH IN FEET. SEE PLAN AND 17/S1.3 FOR TYPICAL PLYWOOD SHEAR WALL UNO.
- DT7Z2 — INDICATES HOLDOWN ANCHOR. SEE SCHEDULE ON 9/S1.3
- INDICATES PLYWOOD SHEAR WALL EXTENT
- INDICATES STUD WALL.

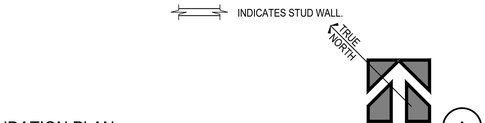

COLD STORAGE FOUNDATION PLAN (A)
1/4" = 1'-0"

FOOTING REINFORCEMENT SCHEDULE		
MARK	LONGIT REINFORCEMENT	TRANSVERSE REINFORCEMENT
FA	#6 TOP & BOTTOM	PER DETAIL
FB	(2) #6 TOP & BOTTOM	PER DETAIL

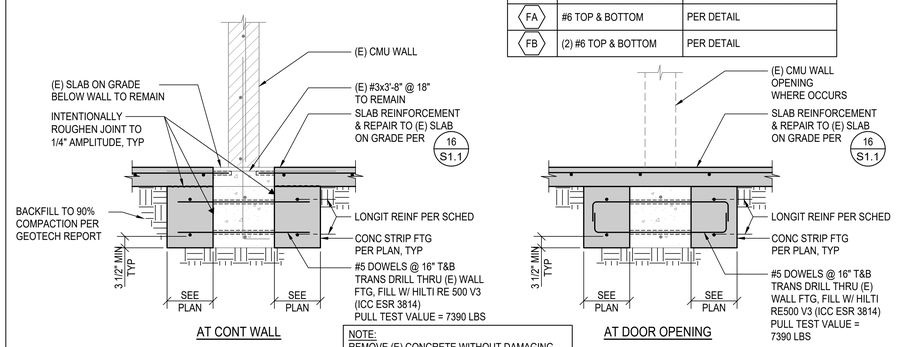

NOTE:
REMOVE (E) CONCRETE WITHOUT DAMAGING (E) REBAR AT CONT WALL CONDITION. CLEAN & BRUSH ALL SURFACES PRIOR TO POUR BACK

WALL FOOTING RETROFIT (14)
3/4" = 1'-0"

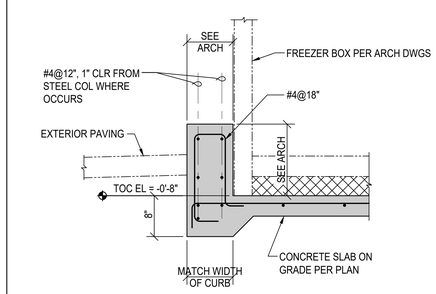

CONCRETE CURB AT WALK IN FREEZER (13)
1" = 1'-0"

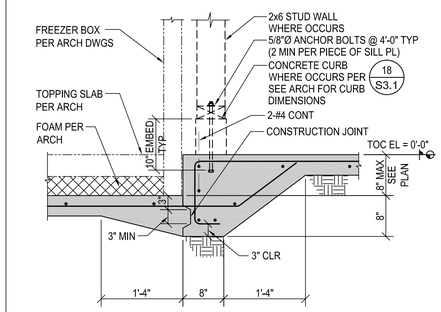

SLAB STEP AT WALK IN FREEZER (12)
1" = 1'-0"

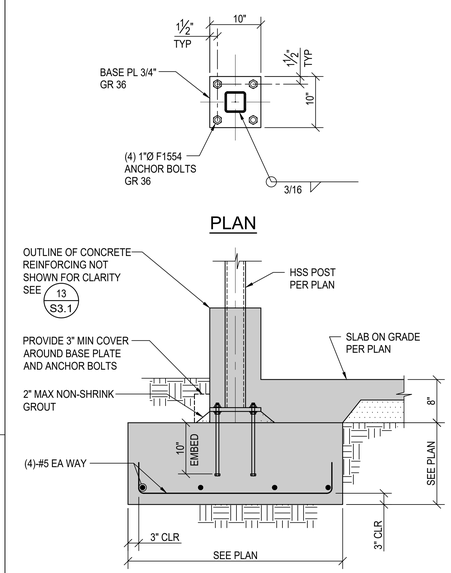

FOOTING AND BASE PLATE DETAIL (16)
1" = 1'-0"

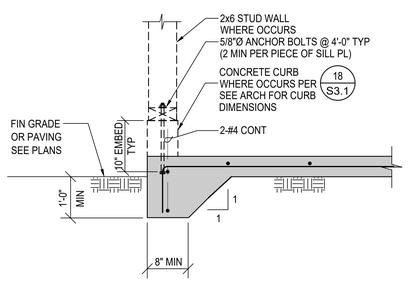

TYPICAL SLAB EDGE TURNDOWN (19)
NTS

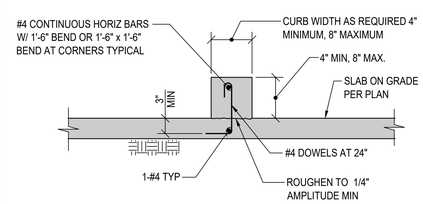

NOTES:
1. SEE ARCH FOR SIZE AND LOCATION OF CURBS.
2. PROVIDE INSERTS AS REQ'D BY ARCH & MECH DWGS.
3. SLAB REINFORCING NOT SHOWN.

TYPICAL CONCRETE CURB (18)
NTS

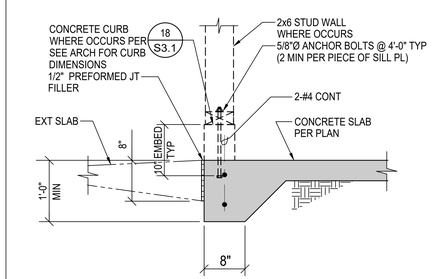

TYPICAL SLAB EDGE TURNDOWN (17)
NTS

IDENTIFICATION STAMP
DIV. OF THE STATE ARCHITECT
APP: 03-122528 INC:
REVIEWED FOR
SS ☑ FLS ☑ ACS ☑
DATE: 01/06/2025

PTN : 63529-385 FILE: 1.5-H3

HIGHLAND HIGH SCHOOL

CAFETERIA MODERNIZATION
2900 ROYAL SCOTS WAY
FOR
KERN HIGH SCHOOL DISTRICT
BAKERSFIELD, KERN COUNTY, CALIFORNIA

ARCHITECT inc.
1601 NEW STINE ROAD, SUITE 280
BAKERSFIELD, CA 93309
PH: (661) 397-4377
FAX: (661) 397-4378
WWW.SCARCHITECT.COM
LICENSED ARCHITECT C-16782 STATE OF CALIFORNIA
STEPHEN J. CORBIN, NCARB, AIA, LEED BD+C-AP

CHECK AND VERIFY ALL DIMENSIONS BEFORE PROCEEDING WITH THE WORK. REPORT DISCREPANCIES TO THE ARCHITECT. ALL CONSTRUCTION SHALL CONFORM TO THE C.B.C.

KERN HIGH SCHOOL DISTRICT — Tradition of Excellence — Est. 1893

MISC PLANS AND DETAILS

MARK	DATE	REVISIONS
1		
2		
3		

LICENSED PROFESSIONAL ENGINEER JOHN MARTIN No. S6869 STATE OF CALIFORNIA
MARTIN & associates
JOHN A. MARTIN & ASSOCIATES
Structural Engineers
950 S. Grand Avenue
Los Angeles, Calif. 90015
Phone (213) 483-6490
Fax (213) 483-3084
J21067

JOB NO. J21067
DRAWN: JAMA
CHECKED: JAMA
DATE: 08/11/23

S
3.1
OF SHEETS

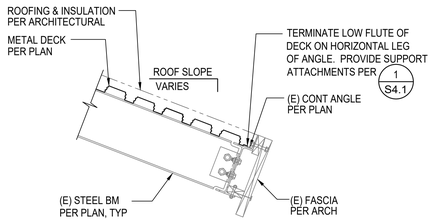

NOTE:
FOR EXTERIOR CEILING FRAMING
SEE 1/S4.2.

METAL DECK EDGE W/ EDGE BEAM DETAIL (5)

1" = 1'-0"

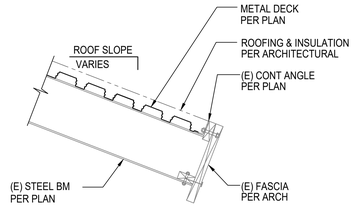

NOTE:
FOR EXTERIOR CEILING FRAMING
SEE 3/S4.2.

TYPICAL METAL DECK EDGE DETAIL (4)

1" = 1'-0"

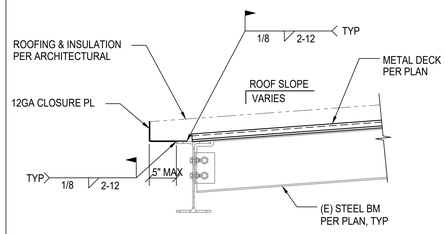

METAL DECK EDGE AT STEP IN ROOF FRAMING (3)

1" = 1'-0"

DECK SCHEDULE					
MARK	TYPE	DECK ATTACHMENT		SIDELAPS	MAX SPANS
		PER SHEET PER PERPENDICULAR OR SKEWED SUPPORT	PARALLEL SUPPORTS AND MARGINS		
R-1	VERCO PLB-36x18GA GALVANIZED	(4) 1/2"Ø EFF ARC SPOT WELDS	1/2"Ø EFF ARC SPOT WELDS @24"	VSC2 @12"	7' - 0"

NOTES:
1. AT UNTOPPED (BARE) METAL ROOF DECKS, SPANS SHALL NOT EXCEED THE SCHEDULED MAXIMUM SPANS. NOTIFY SEOR WHERE UNTOPPED DECKS CANNOT BE INSTALLED TO MEET THE SCHEDULE MAXIMUMS.
2. 1½" LONG TOP SEAM WELDS MAY BE USED AT SIDELAPS IN LIEU OF BUTTON PUNCH OR VSC CONNECTIONS.

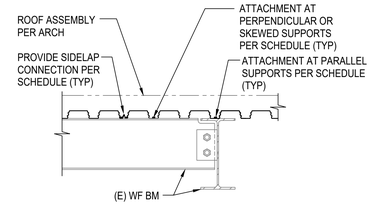

TYPICAL METAL DECK SCHEDULE AND ATTACHMENTS (1)

1" = 1'-0"

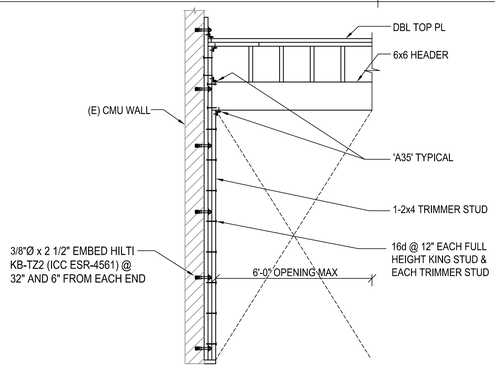

WOOD HEADER TO CMU WALL DETAIL (10)

NTS

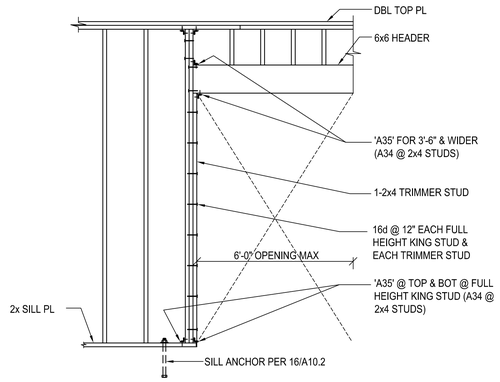

NON BEARING STUD WALL FRAMING (8)

NTS

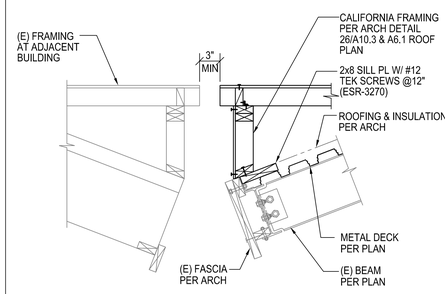

NOTE:
FOR EXTERIOR CEILING FRAMING
SEE 1/S4.2 AND 3/S4.2.

METAL DECK EDGE AT ADJACENT BUILDING (7)

1" = 1'-0"

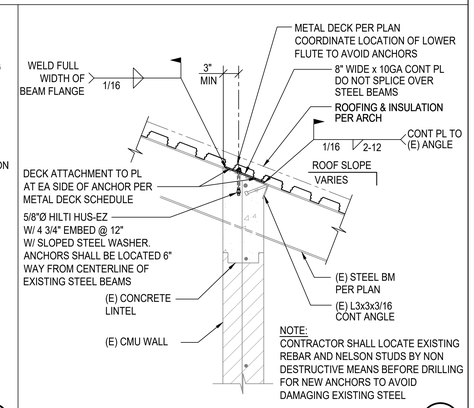

NOTE:
CONTRACTOR SHALL LOCATE EXISTING REBAR AND NELSON STUDS BY NON DESTRUCTIVE MEANS BEFORE DRILLING FOR NEW ANCHORS TO AVOID DAMAGING EXISTING STEEL

METAL DECK CONNECTION TO WALL (6)

1" = 1'-0"

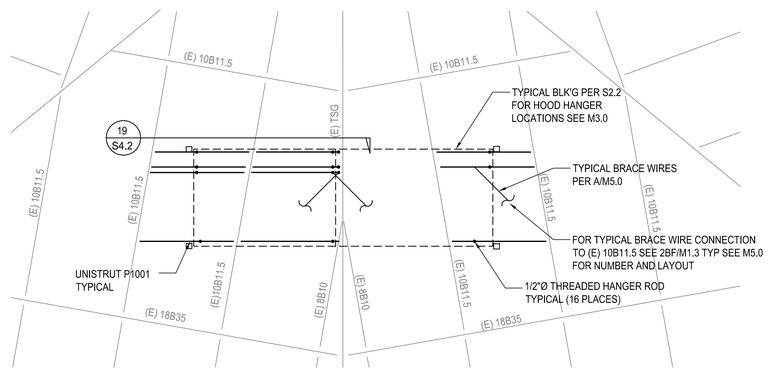

PARTIAL PLAN AT HOOD SUPPORT (14)

1/4" = 1'-0"

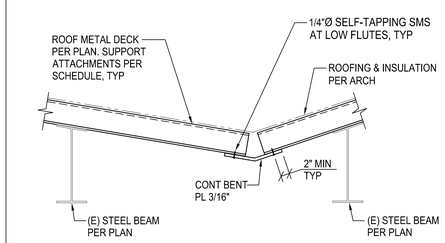

SECTION (13)

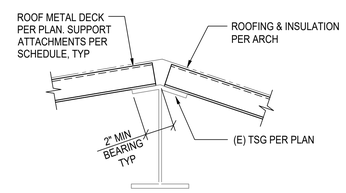

SECTION (12)

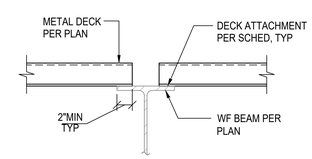

METAL DECK SPLICE OVER BEAM (11)

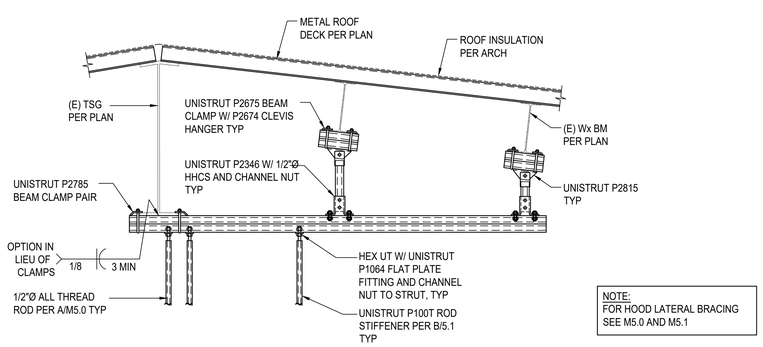

NOTE:
FOR HOOD LATERAL BRACING
SEE M5.0 AND M5.1

SECTION AT HOOD SUPPORT FRAMING (19)

1" = 1'-0"

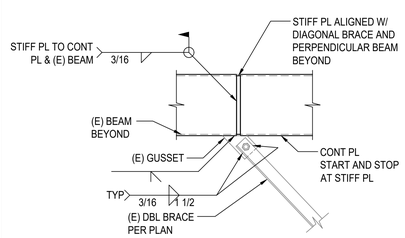

SECTION (18)

1" = 1'-0"

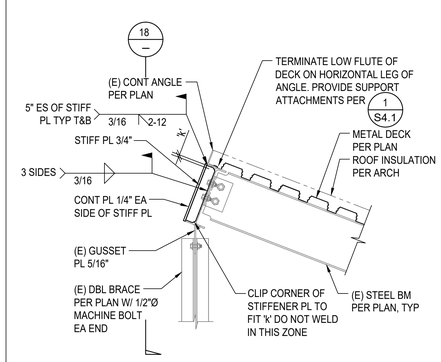

COLLECTOR BEAM STRENGTHENING DETAIL (17)

1" = 1'-0"

JOHN A. MARTIN & ASSOCIATES
Structural Engineers
950 S. Grand Avenue
Los Angeles, Calif. 90015
Phone (213) 483-6490
Fax (213) 483-3084
J21067

IDENTIFICATION STAMP
DIV. OF THE STATE ARCHITECT
APP: 03-122528 INC:
REVIEWED FOR
SS ☑ FLS ☑ ACS ☑
DATE: 01/06/2025

PTN : 63529-385 FILE: 1.5-H3

HIGHLAND HIGH SCHOOL

CAFETERIA MODERNIZATION
2900 ROYAL SCOTS WAY
FOR
KERN HIGH SCHOOL DISTRICT
BAKERSFIELD, KERN COUNTY, CALIFORNIA

SCR ARCHITECT inc.
1601 NEW STINE ROAD, SUITE 280
BAKERSFIELD, CA 93309
PH: (661) 397-4377
FAX: (661) 397-4378
WWW.SCARCHITECT.COM
STEPHEN J. CORBIN, NCARB, AIA, LEED BD+C-AP

CHECK AND VERIFY ALL DIMENSIONS BEFORE PROCEEDING WITH THE WORK. REPORT DISCREPANCIES TO THE ARCHITECT. ALL CONSTRUCTION SHALL CONFORM TO THE C.B.C.

KERN HIGH SCHOOL DISTRICT
Tradition of Excellence

SECTIONS AND DETAILS

MARK	DATE	REVISIONS
1		
2		
3		

JOB NO. J21067
DRAWN: JAMA
CHECKED: JAMA
DATE: 08/11/23

S

4.1
OF SHEETS

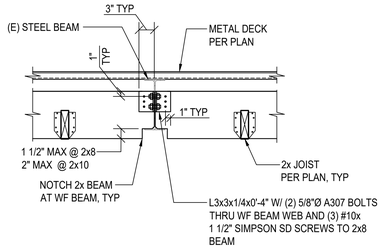

SECTION 5
1" = 1'-0"

NOTE:
PROVIDE 2x8 BEAM AT TYPICAL 3:12 ROOF SLOPE AND 2x10 BEAM AT 4 1/2:12 ROOF SLOPE TO ACCOMODATE THE CLIP ANGLE CONNECTION TO THE (E) STEEL BEAM. IT IS ACCEPTABLE TO USE 2x10 BEAMS IN LIEU OF 2x8 BEAMS ALL AROUND AT THE CONTRACTOR'S OPTION.

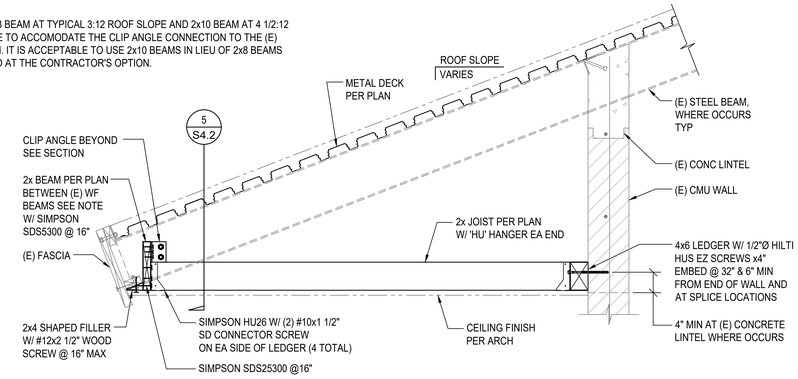

TYPICAL EXTERIOR CEILING FRAMING SECTION 3
1" = 1'-0"

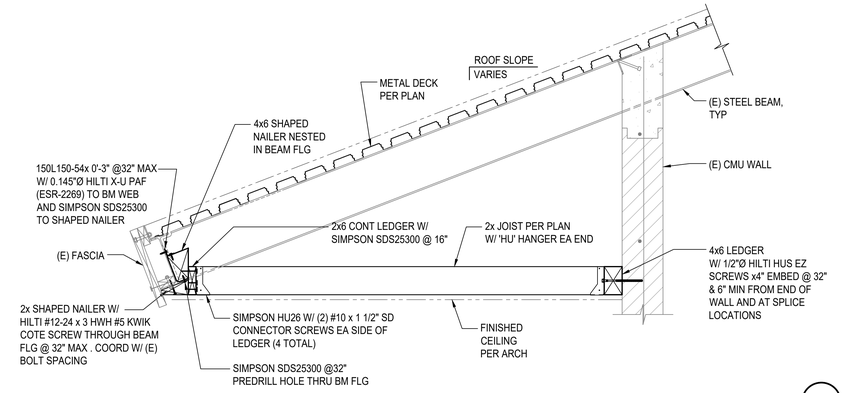

CEILING FRAMING SECTION AT STEEL EDGE BEAM 1
1" = 1'-0"

NOTE:
CONTRACTOR SHALL LOCATE EXISTING REBAR BY NON DESTRUCTIVE MEANS BEFORE DRILLING FOR NEW ANCHORS TO AVOID DAMAGING EXISTING STEEL

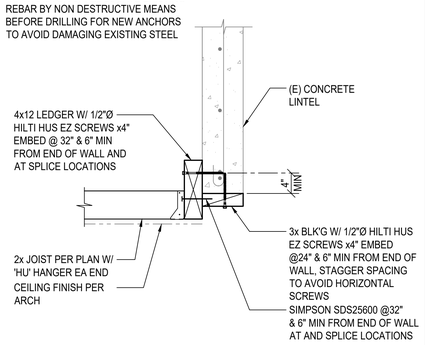

EXTERIOR CEILING FRAMING AT 4x12 LEDGER 10
1" = 1'-0"

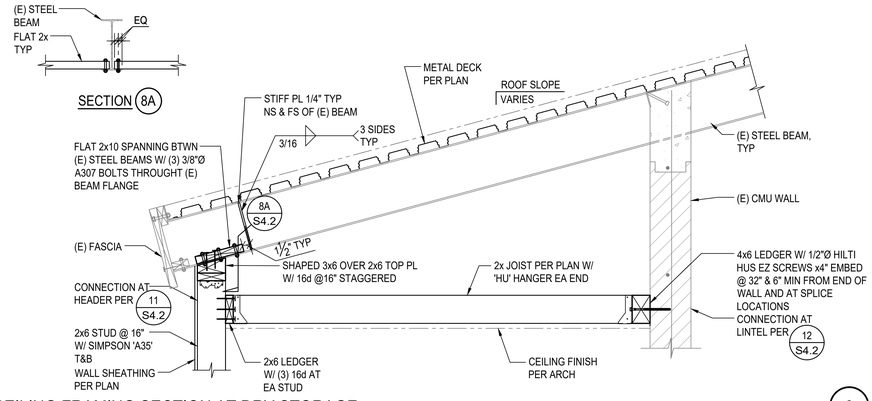

CEILING FRAMING SECTION AT DRY STORAGE 8
1" = 1'-0"

NOTE:
FOR BALANCE OF INFO SEE 3 S4.2

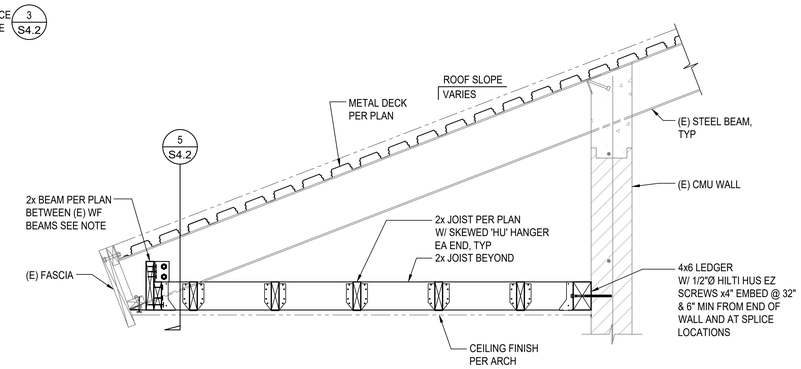

CEILING FRAMING SECTION AT SKEWED CORNER 6
1" = 1'-0"

NOTE:
FOR BALANCE OF INFO SEE 1 S4.2

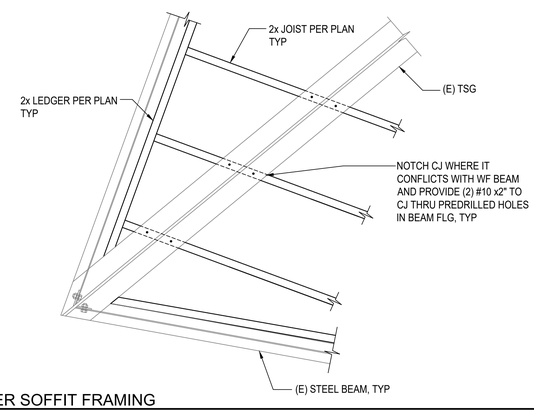

PLAN SECTION AT CORNER SOFFIT FRAMING 13
1" = 1'-0"

NOTE:
CONTRACTOR SHALL LOCATE EXISTING REBAR BY NON DESTRUCTIVE MEANS BEFORE DRILLING FOR NEW ANCHORS TO AVOID DAMAGING EXISTING STEEL

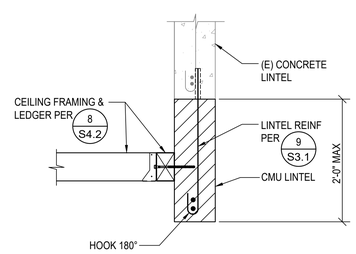

CMU LINTEL SECTION 12
1" = 1'-0"

NOTE:
FOR HEADER CONNECTION TO JAMB STUDS BEYOND SEE 8 S4.1

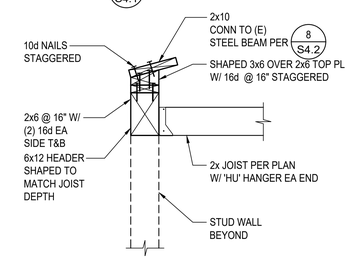

SECTION AT HEADER 11
1" = 1'-0"

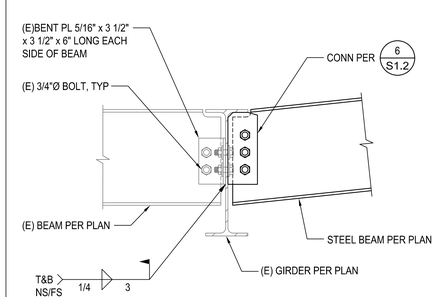

BEAM CONNECTION 17
1 1/2" = 1'-0"

IDENTIFICATION STAMP
DIV. OF THE STATE ARCHITECT
APP: 03-122528 INC:
REVIEWED FOR
SS ☑ FLS ☑ ACS ☑
DATE: 01/06/2025

PTN : 63529-385 FILE: 1.5-H3

HIGHLAND HIGH SCHOOL
CAFETERIA MODERNIZATION
2900 ROYAL SCOTS WAY
FOR
KERN HIGH SCHOOL DISTRICT
BAKERSFIELD, KERN COUNTY, CALIFORNIA

S ARCHITECT inc.
1601 NEW STINE ROAD, SUITE 280
BAKERSFIELD, CA 93309
PH: (661) 397-4377
FAX: (661) 397-4378
WWW.SCARCHITECT.COM
STEPHEN J. CORBIN, NCARB, AIA, LEED BD+C-AP

CHECK AND VERIFY ALL DIMENSIONS BEFORE PROCEEDING WITH THE WORK. REPORT DISCREPANCIES TO THE ARCHITECT. ALL CONSTRUCTION SHALL CONFORM TO THE C.B.C.

KERN HIGH SCHOOL DISTRICT
Tradition of Excellence
Est. 2021

SECTIONS AND DETAILS

MARK	DATE	REVISIONS
1		
2		
3		

JOHN A. MARTIN & ASSOCIATES
Structural Engineers
950 S. Grand Avenue
Los Angeles, Calif. 90015
Phone (213) 483-6490
Fax (213) 483-3084
J21067

JOB NO. J21067
DRAWN : JAMA
CHECKED : JAMA
DATE : 08/11/23

Equipment Anchorage Notes:

All Mechanical, Plumbing, and Electrical components shall be anchored and installed per the details on the DSA approved construction documents. The following components shall be anchored or braced to meet the force and displacement requirements prescribed in the 2022 CBC, Sections 1617A.1.18 through 1617A.1.26 and ASCE 7-16 Chapters 13, 26 and 30.

1. All permanent equipment and components.
2. Temporary, movable or mobile equipment that is permanently attached (E.G. hard wired) to the building utility services such as electricity, gas or water. "Permanently attached" shall include all electrical connections except plugs for 110/220 volt receptacles having a flexible cable.
3. Temporary, moveable or mobile equipment which is heavier than 400 pounds or has a center mass located 4 feet or more above the adjacent floor or roof level that directly support the component are required to be restrained in a manner approved by DSA.

The following Mechanical and Electrical components shall be positively attached to the structure, but need not demonstrate design compliance with the references noted above. These components shall have flexible connections provided between the component and associated ductwork, piping and conduit. Flexible connections must allow movement in both transverse and longitudinal directions:

A. Components weighing less than 400 pounds and have a center of mass located 4 feet or less above the adjacent floor or roof level that directly support the component.
B. Components weighing less than 20 pounds, or in the case of distributed systems, less than 5 pounds per foot, which are suspended from a roof or floor or hung from a wall.

The anchorage of all Mechanical, Electrical and Plumbing components shall be subject to the approval of the design professional in general responsible charge or structural engineer delegated responsibility and acceptance by DSA. The project inspector will verify that all components and equipment have been anchored in accordance with above requirements.

Piping, Ductwork, and Electrical Distribution System Bracing Note:

Piping, ductwork, and Electrical distribution systems shall be braced to comply with the forces and displacements prescribed in ASCE 7-16 Section 13.3 as defined in ASCE 7-16 Section 13.6.5., 13.6.6, 13.6.7, 13.6.8, and 2022 CBC, Sections 1617A.1.24, 1617A.1.25 and 1617A.1.26.

The method of showing bracing and attachments to the structure for the identified distribution system are as noted below. When bracing and attachments are based on a pre-approved installation guide (e.g., OSHPD OPM for 2013 CBC or later), copies of the bracing system installation guide or manual shall be available on the jobsite prior to the start of and during the hanging and bracing of the distribution systems. The Structural Engineer of Record shall verify the adequacy of the structure to support the hanger and brace loads.

Mechanical Piping (MP), Mechanical Ducts (MD), Plumbing Piping (PP), Electrical Distribution Systems (E):

MP ☐ MD ☐ PP ☑ E ☐ — **Option 1:** Detailed on the approved drawings with project specific notes and details

MP ☐ MD ☐ PP ☐ E ☐ — **Option 2:** Shall comply with the applicable OSHPD Pre-Approval (OPM#) #________________.

Foodservice Equipment Schedule

Item Number	Qty	Description	Manufacturer	Model
A2	1	Mop Sink Cabinet	Advance Tabco	9-OPC-84DL-300
A2.1	1	Service Faucet	T&S Brass	B-0655-01
A14	4	Hand Sink	Eagle Group	HSAP-14-ADA-FW
A28	4	Convection Oven, Double	Montague Company	2-115A
A32	1	Range, 6-Burner With Standard Oven	Montague	136-5
A35	1	Work Table With Sinks	Fabricated	Stainless Steel
A39	1	Hose Reel	T&S Brass	B-7122-C01
A39.1	1	Hose Reel Control Cabinet	T&S Brass	B-2339-LR
A40	2	Chemical Dispensing System	By Purveyor	NIKEC
A41	1	Soiled Dish Table	Fabricated	Stainless Steel
A42	1	Dish Machine, Door Type	Hobart	AM16VLT-ADV
A42.1	1	Drain Water Tempering Kit	Hobart	DWT2-AM16
A46	1	Pot Sink	Fabricated	Stainless Steel
A46.1	1	Pre-Rinse Faucet	T&S Brass	B-0133-12-CR-B
A48	1	Ice Machine	Owner Furnished	Contractor Installed
A48.1	1	Ice Bin	Owner Furnished	Contractor Installed
A48.2	1	Water Filtration System	3M Purification	ICE140-S
A61	1	Faculty Lounge Counter	By Arch/ID	Millwork
A61.1	1	Deck Mount Faucet	T&S Brass	B-0221-CR
A73	1	Mop Sink	Advance Tabco	9-OP-28
A73.1	1	Service Faucet	T&S Brass	B-0655-01

PLUMBING FIXTURE SCHEDULE

WC

Reinstall existing accessible floor mounted water closet with manually operated flush valve "Zurn" #Z6000AV-(match existing gallons per flush) (HET = 1.28 gpf, WS1 = 1.6 gpf), 1-1/4" C.W.(reduce to 1" @ flush-valve), 3" S. & W., 2" V.O., see plan for trap primer accessory.

UR

Wall mt'd. accessible urinal, "Kohler" # K-4991-ET-0 Bardon,"Zurn" # Z6003AV-ULF manually operated flush-valve, wall hanger, see manufacturers installation instructions for mounting heights, 3/4" C.W., 2" W., 2" W.C.O., 1-1/2" V.O.

LAV

Reinstall existing accessible wall hung lavatory with counter mounted "Chicago" # 3502-4E2805ABCP manual metering faucet, .5 GPM aerator, (2) wall stops with supplies, 17 ga. C.P. trap/tailpiece, (wrap H.W. and trap/tailpiece) 1/2" H.W./C.W., 2" W., 2" W.C.O., 1-1/2" V.O., Provide "Leonard" # 170-LF-BP tempering valve set @ 110 degrees F

FD

Cast iron floor drain, "Zurn" # Z415B with 5" dia. bronze grate, 2" trap with primer connection, 2" W., 1-1/2" V.O. (2" V.O. below slab if shown)

FS-1

12"x12" enameled cast iron floor sink, "J.R. Smith" # 320-Y02-11 with nickel-bronze rim and half-grate, 2" W., 2" W.C.O., 2" V.O. (below floor), 1-1/2" V.O.

FS-2

4"x8" enameled cast iron floor sink, "J.R. Smith" # 3300Y-12 with nickel-bronze rim and half-grate, 2" W., 2" W.C.O., 2" V.O. (below floor), 1-1/2" V.O.

HB

Riser mt'd. hose bibb, "Acorn" # 8136 with integral vacuum breaker, loose key handle, 3/4" C.W.

TP

Trap primer in wall access door, "PPP" with manifold as required for multiple traps, 1/2" C.W. w/ ball valve to primer

EDF

Wall mounted electric dual hi-lo accessible drinking fountain / hydration bottle-fill station, "Elkay" # LZSTLG8WSSK, 1/5th H.P. @ 120v.-1ph., (2) threaded angled wall stops with braided stainless steel supplies, 17 ga. C.P. trap/tailpiece, 2" W., 2" W.C.O., 1-1/2" V.O., 1/2" C.W.

CP

Bronze body (lead free) domestic hot water circulating pump, "Taco" #006-B4-2PNP, .52 A. @120v. - 1ph. 4GPM @ 8ft. head, integral digital time clock, 3/4" sweat connections, 7 lbs.

TV

Exposed mounted high-low tempering valve, "Powers" # LFSH1434, see plan for H.W./C.W. inlets, 1-1/2" tempered water outlet (see plan), rough brass, field provided outlet thermometer, (set to 120 degrees F.) .5-27 GPM range. Increase discharge as shown on plans and reduce into tempering valve as shown.

WH

Gas high efficiency (94%) sealed combustion water heater, "A.O. Smith" # BTH-150, 100 gallon glass lined tank, 150,000 BTUH nat. gas input, 297 GPH recovery @ 60 degree rise, 3" dia. PVC flue and 3" dia. PVC combustion air thru roof in concentric kit, "Amtrol" # ST-5 expansion tank mounted on the C.W. inlet, 5 amps at 120v.-1 phase for flue blower and electric ignition, 1356 lbs. (wet)

PLUMBING LEGEND

SYMBOL	ABBR.	ITEM	SYMBOL	ABBR.	ITEM
	ACC.	ACCESSIBLE		GRD.	GRADE
	A.D.	ACCESS DOOR/WALL BOX	—G.W.—	G.W.	GREASE WASTE
	A.F.F.	ABOVE FINISHED FLOOR		H.B.	HOSE BIBB
	C.D.	CONDENSATE DRAIN		H.V.(A-C)	AIR CONDITIONING EQPT.
	C.I.	CAST IRON		L.	LAVATORY
	CLG.	CEILING		LOC.	LOCATION
	C.O.	CLEANOUT		(N)	NEW
	COMB.	COMBUSTION		N.I.C.	NOT IN CONTRACT
	CONN.	CONNECTION	OR	P.O.C.	POINT OF CONNECTION
	CONT.	CONTINUATION		PROV.	PROVIDE
	COTG	CLEANOUT TO GRADE		P.R.V.	PRESSURE REDUCING VALVE
	(D)C.W.	(DOMESTIC) COLD WATER		R.D.	ROOF DRAIN
	D.H.	DEMO HATCH		R.W.L.	RAINWATER LEADER
	(D)H.W.	(DOMESTIC) HOT WATER		S.	SINK
	(D)HWR	(DOMESTIC) HOT WATER RETURN		S.&W.	SOIL AND WASTE
	DN.	DOWN		SIM.	SIMILAR
	DR'N.	DRAIN	OR OR	S.O.V.	SHUT OFF VALVE
	(E).	EXISTING		SS	STAINLESS STEEL
	(E)C.W.	EXISTING COLD WATER		S.S.	SERVICE SINK
	(E)H.W.	EXISTING HOT WATER		SURF.	SURFACE
	(E)H.W.R	EXISTING HOT WATER RETURN		T.&P.	TEMPERATURE AND PRESSURE RELIEF
(E)C.D— —	(E)C.D	EXISTING CONDENSATE DRAIN		T.P.	TRAP PRIMER
	E.D.F.	ELECTRIC DRINKING FOUNTAIN		(TYP)	TYPICAL
	E.W.H.	ELECTRIC WATER HEATER		UR.	URINAL
	F.C.O.	FLOOR CLEANOUT		V.O.	VENT OFFSET
	F.D.	FLOOR DRAIN		V.T.R.	VENT THRU ROOF
	FLR.	FLOOR		(E) W.	EXISTING WASTE
	F.S.	FLOOR SINK		W.	WASTE
—G.—	G.	GAS		W.C.	WATER CLOSET
— — —(E) G.— —	(E) G.	EXISTING GAS		W.H.	WATER HEATER
	G.D.	GARBAGE DISPOSAL		W.C.O.	WALL CLEANOUT

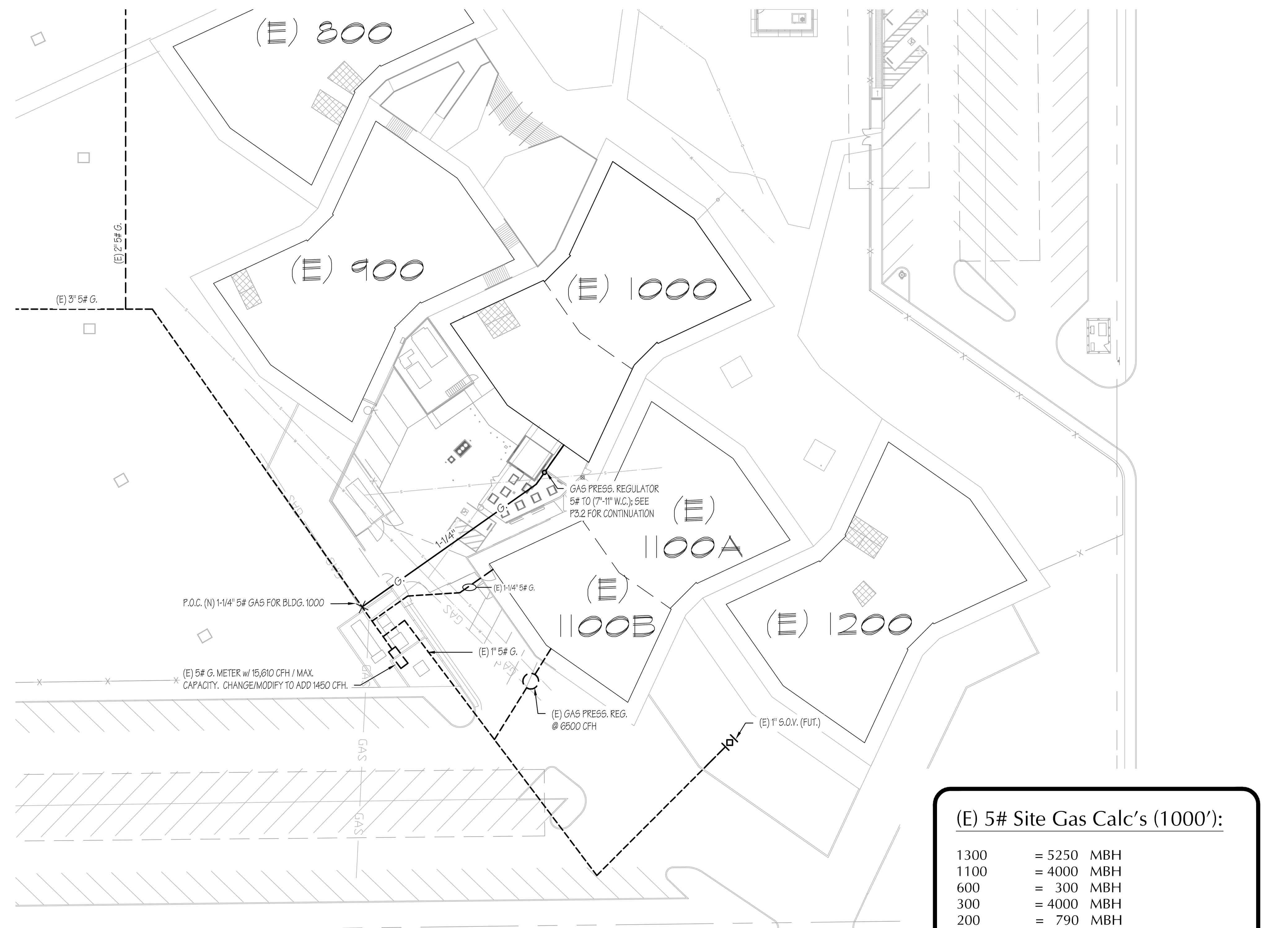

PARTIAL PLUMBING SITE PLAN

SCALE: 1"=40'-0"

TRUE NORTH

(E) 5# Site Gas Calc's (1000'):

1300	= 5250 MBH
1100	= 4000 MBH
600	= 300 MBH
300	= 4000 MBH
200	= 790 MBH
(N) 1000	= 1514 MBH
TOTAL	= 15854 MBH

3" G. to start per CPC 2019 Table 1215.2(6)
((E) 3" GAS IS ALREADY PRESENT)

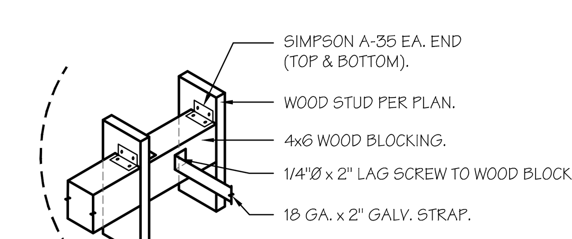

WOOD STUD

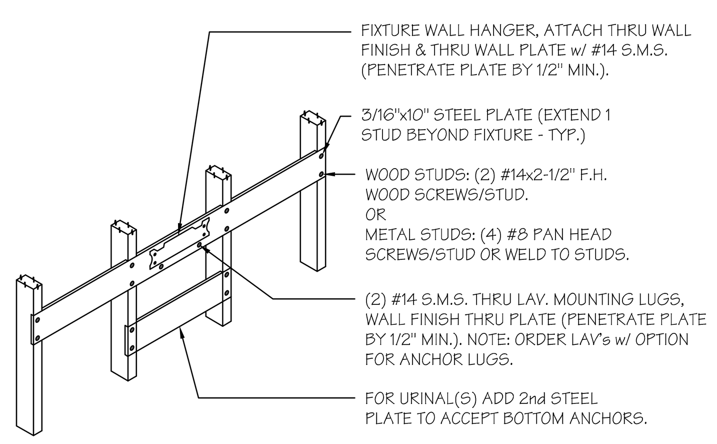

LAV. AND URINAL MOUNTING (A)

SCALE: N.T.S.

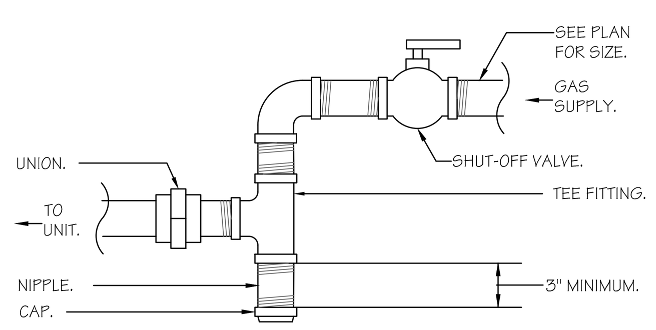

GAS DIRT LEG DETAIL (B)

SCALE: N.T.S.

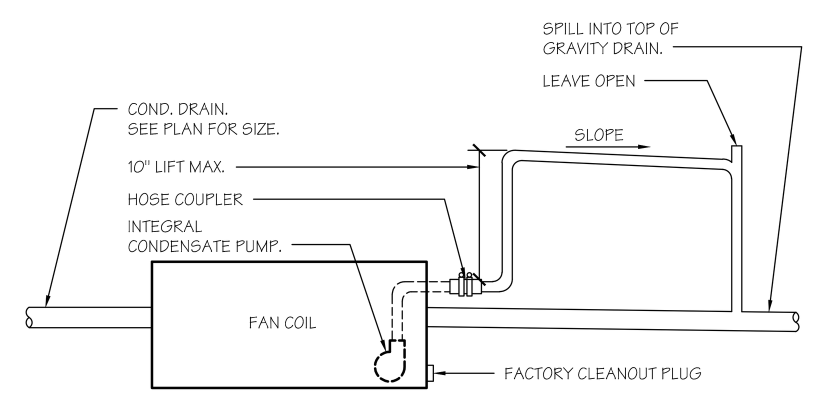

CONDENSATE DRAIN CONNECTION (C)

SCALE: N.T.S.

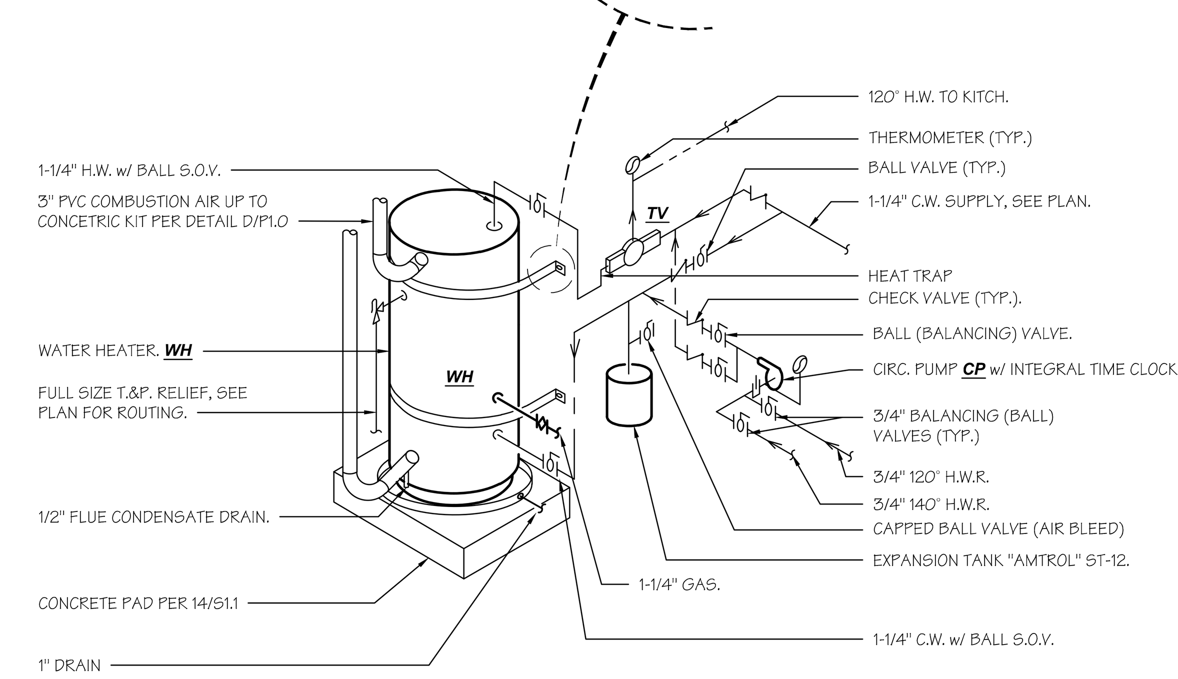

WATER HEATER MOUNTING (G)

SCALE: N.T.S.

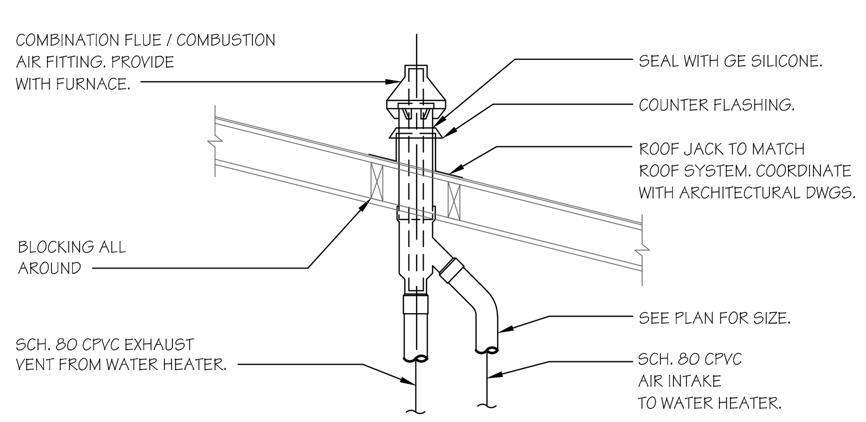

COMBINATION INTAKE/ COMBUSTION FLUE THRU ROOF (D)

SCALE: NTS

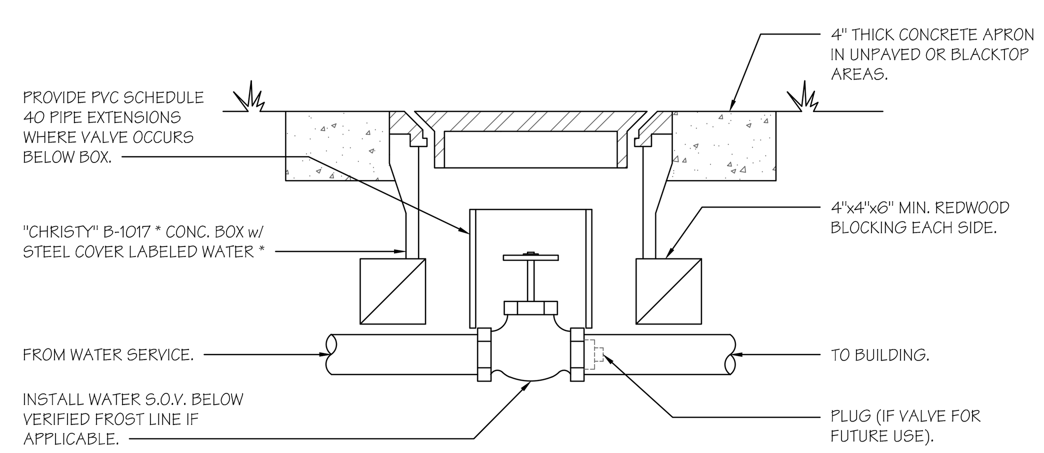

VALVE SIZES/TYPES:
2" & BELOW = BALL VALVE*
2-1/2" & ABOVE = GATE VALVE

SHUT-OFF VALVE IN YARD BOX (E)

SCALE: N.T.S.

* SIZE BOX FOR REMOVAL OF VALVE & BALL VALVE HANDLE OPERATION.

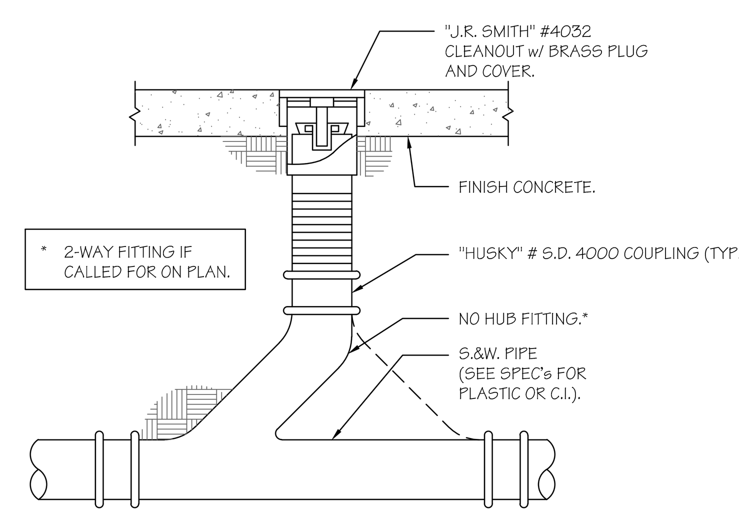

FLOOR CLEANOUT (F)

SCALE: N.T.S.

BASKIN MECHANICAL ENGINEERS
175 Fulton Street
Fresno, CA 93721
Tel: (559) 237-0376
Job: 20141
Plt: 9/10/24

IDENTIFICATION STAMP
DIV. OF THE STATE ARCHITECT
APP: 03-122528 INC:
REVIEWED FOR
SS ☑ FLS ☑ ACS ☑
DATE: 01/06/2025

PTN: 63529-385 FILE: 15-H3

HIGHLAND HIGH SCHOOL

CAFETERIA REHABILITATION AND MODERNIZATION
2900 ROYAL SCOTS WAY
FOR
KERN HIGH SCHOOL DISTRICT
BAKERSFIELD, KERN COUNTY, CALIFORNIA

ARCHITECT SCA inc.
1601 NEW STINE ROAD, SUITE 280
BAKERSFIELD, CA 93309
PH: (661) 397-4377
FAX: (661) 397-4378
WWW.SCARCHITECT.COM

STEPHEN J. CORBIN, NCARB, AIA, LEED ®-AP

CHECK AND VERIFY ALL DIMENSIONS BEFORE PROCEEDING WITH THE WORK. REPORT DISCREPANCIES TO THE ARCHITECT. ALL CONSTRUCTION SHALL CONFORM TO THE C.B.C.

KERN HIGH SCHOOL DISTRICT — Tradition of Excellence — Est. 1893

PLUMBING SITE PLAN, NOTES, & SCHEDULES

MARK	DATE	REVISIONS
1		
2		
3		

JOB NO. 1319
DRAWN: MB
CHECKED: MB
DATE: 2/8/22

P 1.0

M OF - SHEETS

SERVICE	MATERIAL	PIPE SIZE	MAX WEIGHT lb./ft.	HANGER MAX SPACING	TRAVERSE BRACE MAX SPACING	4-WAY BRACE MAX SPACING
VENT	CAST IRON	1-1/4" TO 3"	6.00	5'	20'	20'
HW / CW	TYPE L COPPER	1/2" TO 1-1/2"	4.54	6'	20'	20'
		2" TO 4"	10.1	10'	20'	20'
GAS	SCHEDULE 40 STEEL	3/4" TO 1-1/4"	1.66	7'	20'	20'
		1-1/2" TO 3"	3.5	10'	20'	20'

PIPE SIZE	HANGER ROD
1/2" TO 2"	3/8"
2-1/2" TO 4"	1/2"

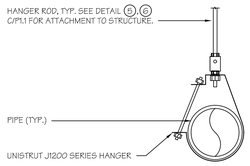

PIPE SUPPORT HANGER

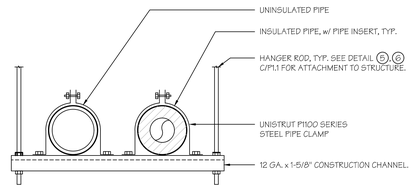

PIPE SUPPORT TRAPEZE

PIPE HANGERS (A)

SCALE: N.T.S.

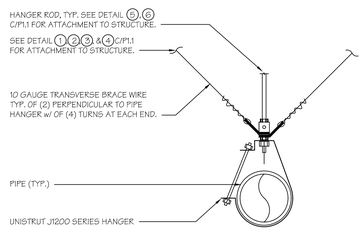

SINGLE PIPE SUPPORT

NOTE:
- WHERE 4-WAY BRACE IS REQ'D., PROVIDE (2) ADDITIONAL WIRES AND SPLAY WIRES OUT AT 45°.

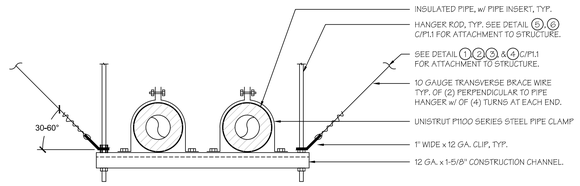

PIPE SUPPORT TRAPEZE

PIPE BRACING (B)

SCALE: N.T.S.

NOTES:
1. MAX HANGER ROD LENGTH LIMITED TO 36".
2. REFER TO ADDITIONAL NOTES ON P1.1 FOR BRACING REQUIREMENTS

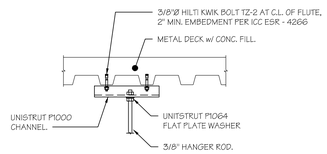

STEEL DECK WITH CONCRETE FILL (5)

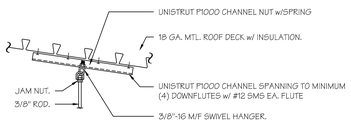

STEEL DECK CONN. w/ INS. (6)

HANGER ROD ATTACHMENT

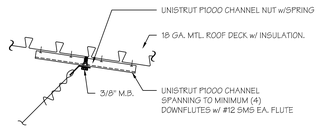

STEEL DECK CONN. w/ INS. (1)

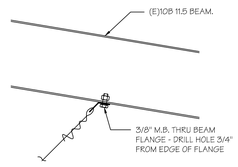

BEAM CONN.'s (2)

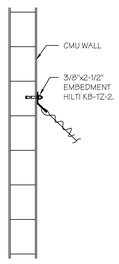

WALL CONN. (4)

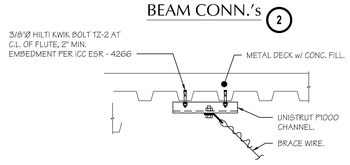

STEEL DECK WITH CONCRETE FILL (3)

BRACE CABLE ATTACHMENT

NOTE: INSTALL ANCHORS AND THREADED ROD @ C.L. OF CHANNEL FLANGE

PIPE HANGER AND BRACING - CONNECTIONS TO STRUCTURE (C)

SCALE: N.T.S.

BRACING GENERAL NOTES:

1. PIPE BRACE MAX SPACING IS 20'-0" ON CENTER
2. PROVIDE ADDITIONAL BRACE AT EACH 90 DEGREE ELBOW.
3. BRACING OF PIPES MAY BE OMITTED WHEN ALL OF THE FOLLOWING APPLY.
   - FLEXIBLE CONNECTIONS, EXPANSIONS LOOPS, OR OTHER ASSEMBLIES ARE PROVIDED TO ACCOMMODATE THE RELATIVE DISPLACEMENT BETWEEN THE EQUIPMENT IE: WATER HEATER AND THE PIPING.
   - THE PIPING SYSTEM IS POSITIVELY ATTACHED THE STRUCTURE.
   - **TRAPEZE ASSEMBLIES**:
     a. THE R_x IS GREATER THAN OR EQUAL TO 4.5 (EXCLUDES PIPES OF GLASS, CAST IRON, AND NON-DUCTILE PLASTICS).
     b. VERTICAL SUPPORT PROVIDED BY 3/8 INCH OR 1/2 INCH DIAMETER ROD HANGERS.
     c. EACH ROD IN THE RUN DOES NOT EXCEED 12 INCHES IN LENGTH FROM THE PIPE SUPPORT POINT TO THE STRUCTURE ATTACHMENT POINT.
     d. NO SINGLE NOMINAL PIPE SIZE EXCEEDS 3 INCHES FOR I_p = 1.0 AND EXCEEDS 2" I_p = 1.5
     e. TOTAL WEIGHT SUPPORTED BY SINGLE TRAPEZE IS 100 POUNDS OR LESS
   - **INDIVIDUALLY SUPPORTED PIPES**:
     b. R_x IS GREATER THAN OR EQUAL TO 4.5 (EXCLUDES PIPES OF GLASS, CAST IRON, AND NON-DUCTILE PLASTICS.)
     c. PIPE DIAMETER DOES NOT EXCEED 3 INCHES WHEN I_p = 1.0, OR EXCEED 1" FOR I_p = 1.5.
     d. VERTICAL SUPPORT IS PROVIDED BY 3/8 INCH OR 1/2 INCH DIAMETER ROD HANGERS.
     e. ROD HANGERS DO NOT EXCEED 12 INCHES IN LENGTH FROM THE PIPE SUPPORT POINT TO THE CONNECTION POINT ON THE SUPPORTING STRUCTURE.
     f. THE TOTAL WEIGHT SUPPORTED BY ANY ROD HANGER IS 50 POUNDS OR LESS.

REGISTERED PROFESSIONAL ENGINEER MARK JAMES BASKIN No. M26671 Exp. 06-30-26 MECHANICAL STATE OF CALIFORNIA

BASKIN MECHANICAL ENGINEERS
175 Fulton Street
Fresno, CA 93721
Tel: (559) 237-0376
Job: 20141
Plt: 9/10/24

IDENTIFICATION STAMP
DIV. OF THE STATE ARCHITECT
APP: 03-122528 INC:
REVIEWED FOR
SS ☑ FLS ☑ ACS ☑
DATE: 01/06/2025

PTN : 63529-385 FILE: 15-H3

HIGHLAND HIGH SCHOOL
CAFETERIA REHABILITATION AND MODERNIZATION
2900 ROYAL SCOTS WAY
FOR
KERN HIGH SCHOOL DISTRICT
BAKERSFIELD, KERN COUNTY, CALIFORNIA

ARCHITECT S.A.I. inc.
1601 NEW STINE ROAD, SUITE 280
BAKERSFIELD, CA 93309
PH: (661) 397-4377
FAX: (661) 397-4378
WWW.SCARCHITECT.COM
LICENSED ARCHITECT STEPHEN J. CORBIN C-16788 EXP. 12/31/25 CALIFORNIA
STEPHEN J. CORBIN, NCARB, AIA, LEED ®-AP

CHECK AND VERIFY ALL DIMENSIONS BEFORE PROCEEDING WITH THE WORK. REPORT DISCREPANCIES TO THE ARCHITECT. ALL CONSTRUCTION SHALL CONFORM TO THE C.B.C.

KERN HIGH SCHOOL DISTRICT — Tradition of Excellence — Est. 1893

PLUMBING SITE PLAN, NOTES, & SCHEDULES

MARK	DATE	REVISIONS
1		
2		
3		

JOB NO. 1319
DRAWN : MB
CHECKED : MB
DATE : 2/8/22

P

1.1
M OF - SHEETS

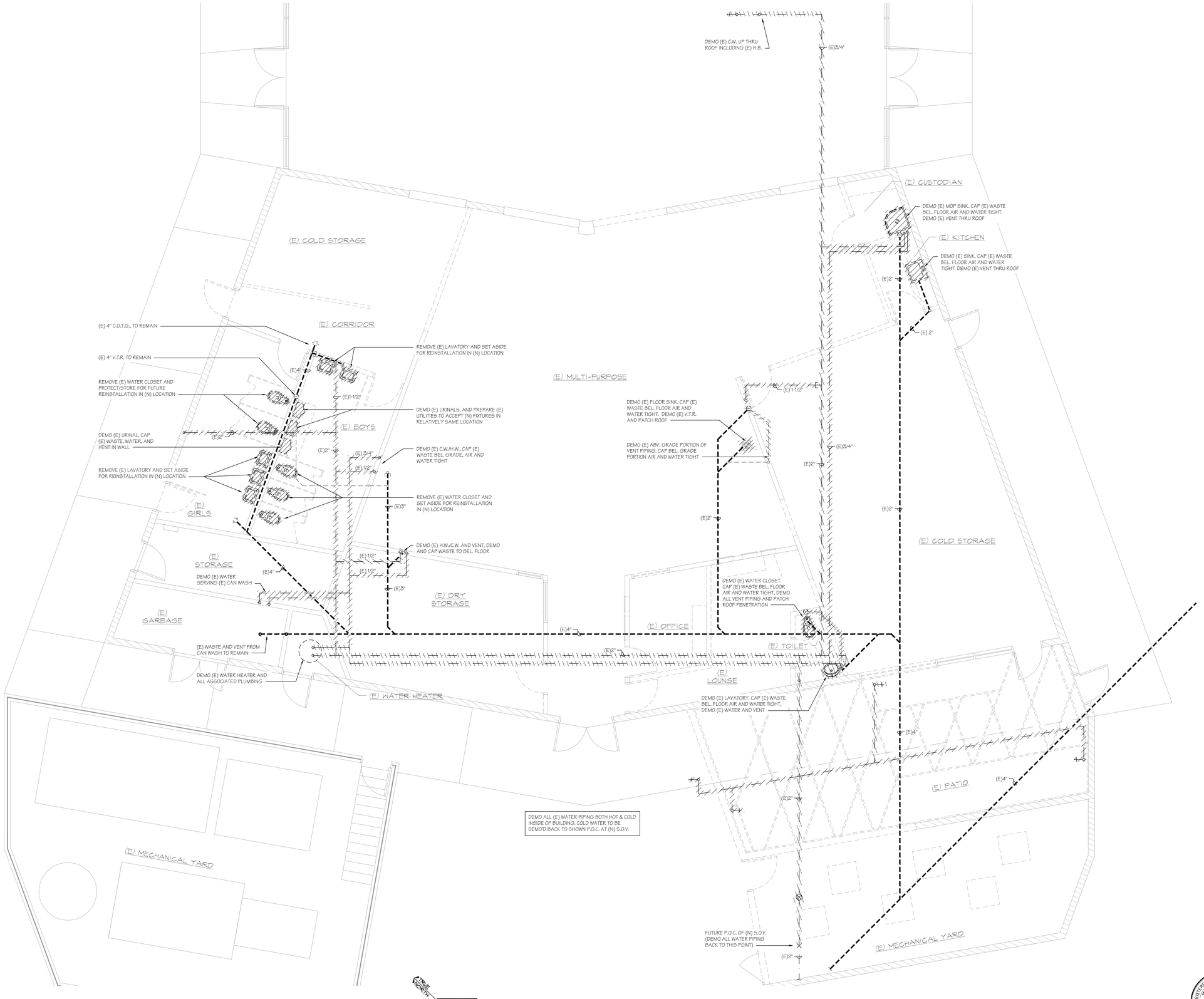

PLUMBING DEMOLITION PLAN

SCALE: 1/4"=1'-0"

IDENTIFICATION STAMP
DIV. OF THE STATE ARCHITECT
APP: 03-122528 INC:
REVIEWED FOR
SS ☑ FLS ☑ ACS ☑
DATE: 01/06/2025

PTN : 63529-385 FILE: 15-H3

HIGHLAND HIGH SCHOOL

CAFETERIA REHABILITATION AND MODERNIZATION

2900 ROYAL SCOTS WAY
FOR
KERN HIGH SCHOOL DISTRICT
BAKERSFIELD, KERN COUNTY, CALIFORNIA

ARCHITECT SCA inc.
1601 NEW STINE ROAD, SUITE 280
BAKERSFIELD, CA 93309
PH: (661) 397-4377
FAX: (661) 397-4378
WWW.SCARCHITECT.COM

LICENSED ARCHITECT STEPHEN J. CORBIN C-15728 EXP. 12/31/25 STATE OF CALIFORNIA

STEPHEN J. CORBIN, NCARB, AIA, LEED ®-AP

CHECK AND VERIFY ALL DIMENSIONS BEFORE PROCEEDING WITH THE WORK. REPORT DISCREPANCIES TO THE ARCHITECT. ALL CONSTRUCTION SHALL CONFORM TO THE C.B.C.

KERN HIGH SCHOOL DISTRICT — Tradition of Excellence — Est. 1893

PLUMBING DEMO PLAN

MARK	DATE	REVISIONS
1		
2		
3		

LICENSED PROFESSIONAL ENGINEER MARK JAMES BASKIN No. M24627 Exp. 06-30-26 MECHANICAL STATE OF CALIFORNIA

BASKIN MECHANICAL ENGINEERS
175 Fulton Street
Fresno, CA 93721
Tel: (559) 237-0376
Job: 20141
Plt: 9/10/24

JOB NO. 1319
DRAWN : MB
CHECKED : MB
DATE : 2/8/22

P

2.0
M OF - SHEETS

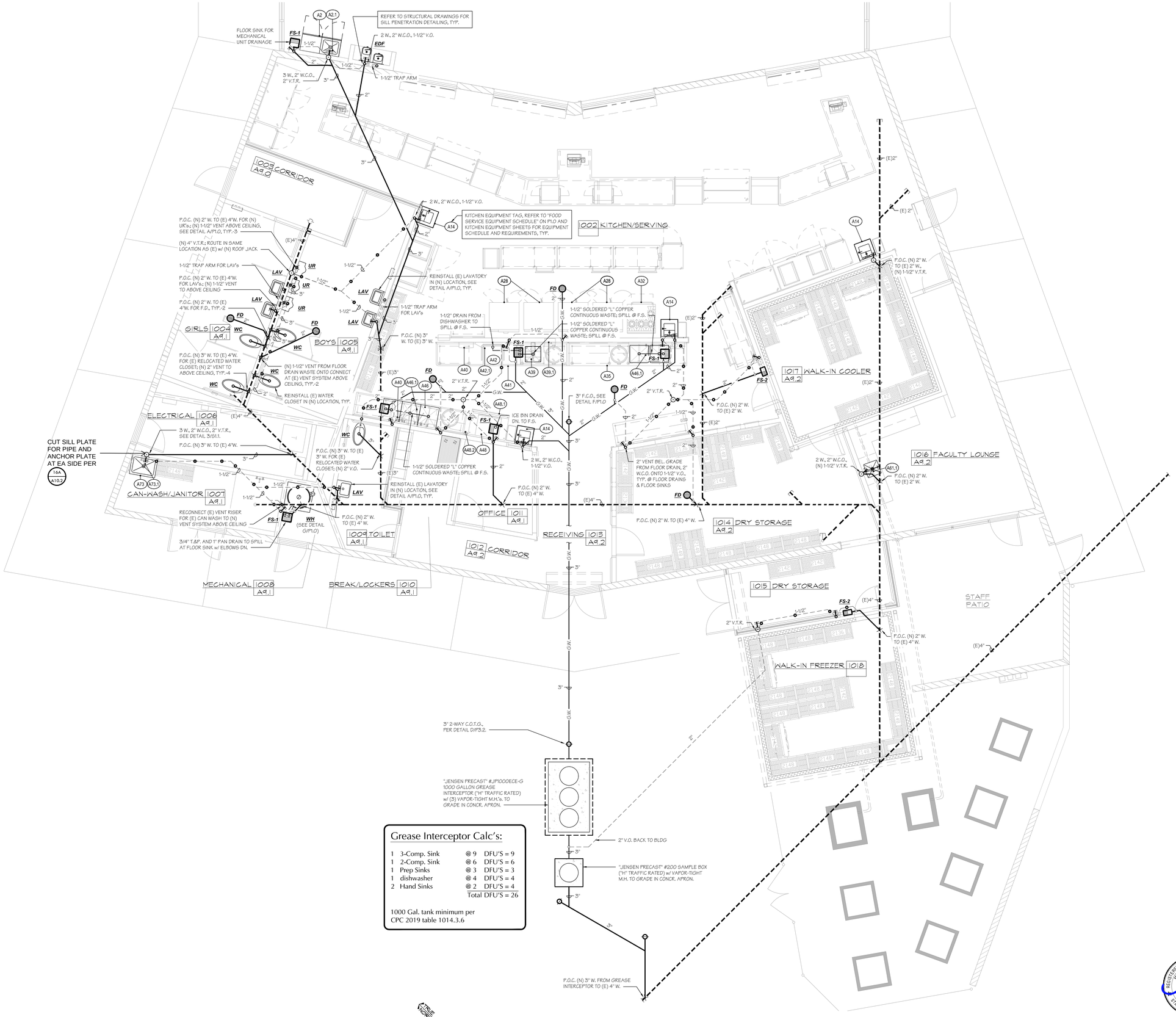

Grease Interceptor Calc's:

1	3-Comp. Sink	@ 9	DFU'S = 9
1	2-Comp. Sink	@ 6	DFU'S = 6
1	Prep Sinks	@ 3	DFU'S = 3
1	dishwasher	@ 4	DFU'S = 4
2	Hand Sinks	@ 2	DFU'S = 4
		Total	DFU'S = 26

1000 Gal. tank minimum per CPC 2019 table 1014.3.6

PLUMBING PLAN - WASTE & VENT

SCALE: 1/4"=1'-0"

BASKIN MECHANICAL ENGINEERS
175 Fulton Street
Fresno, CA 93721
Tel: (559) 237-0376
Job: 20141
Plt: 9/10/24

REGISTERED PROFESSIONAL ENGINEER
MARK JAMES BASKIN
No. M24627
Exp. 06-30-26
MECHANICAL
STATE OF CALIFORNIA

IDENTIFICATION STAMP
DIV. OF THE STATE ARCHITECT
APP: 03-122528 INC:
REVIEWED FOR
SS ☑ FLS ☑ ACS ☑
DATE: 01/06/2025

PTN : 63529-385 FILE: 15-H3

HIGHLAND HIGH SCHOOL

CAFETERIA REHABILITATION AND MODERNIZATION

2900 ROYAL SCOTS WAY
FOR
KERN HIGH SCHOOL DISTRICT
BAKERSFIELD, KERN COUNTY, CALIFORNIA

SCA ARCHITECT inc.
1601 NEW STINE ROAD, SUITE 280
BAKERSFIELD, CA 93309
PH: (661) 397-4377
FAX: (661) 397-4378
WWW.SCARCHITECT.COM
LICENSED ARCHITECT STEPHEN J. CORBIN C-16736 STATE OF CALIFORNIA
STEPHEN J. CORBIN, NCARB, AIA, LEED ®-AP

CHECK AND VERIFY ALL DIMENSIONS BEFORE PROCEEDING WITH THE WORK. REPORT DISCREPANCIES TO THE ARCHITECT. ALL CONSTRUCTION SHALL CONFORM TO THE C.B.C.

KERN HIGH SCHOOL DISTRICT — Bastion of Excellence — Est. 1893

PLUMBING PLAN (WASTE, & VENT)

MARK	DATE	REVISIONS
1		
2		
3		

JOB NO. 1319
DRAWN : MB
CHECKED : MB
DATE : 2/8/22

P

3.0
M OF - SHEETS

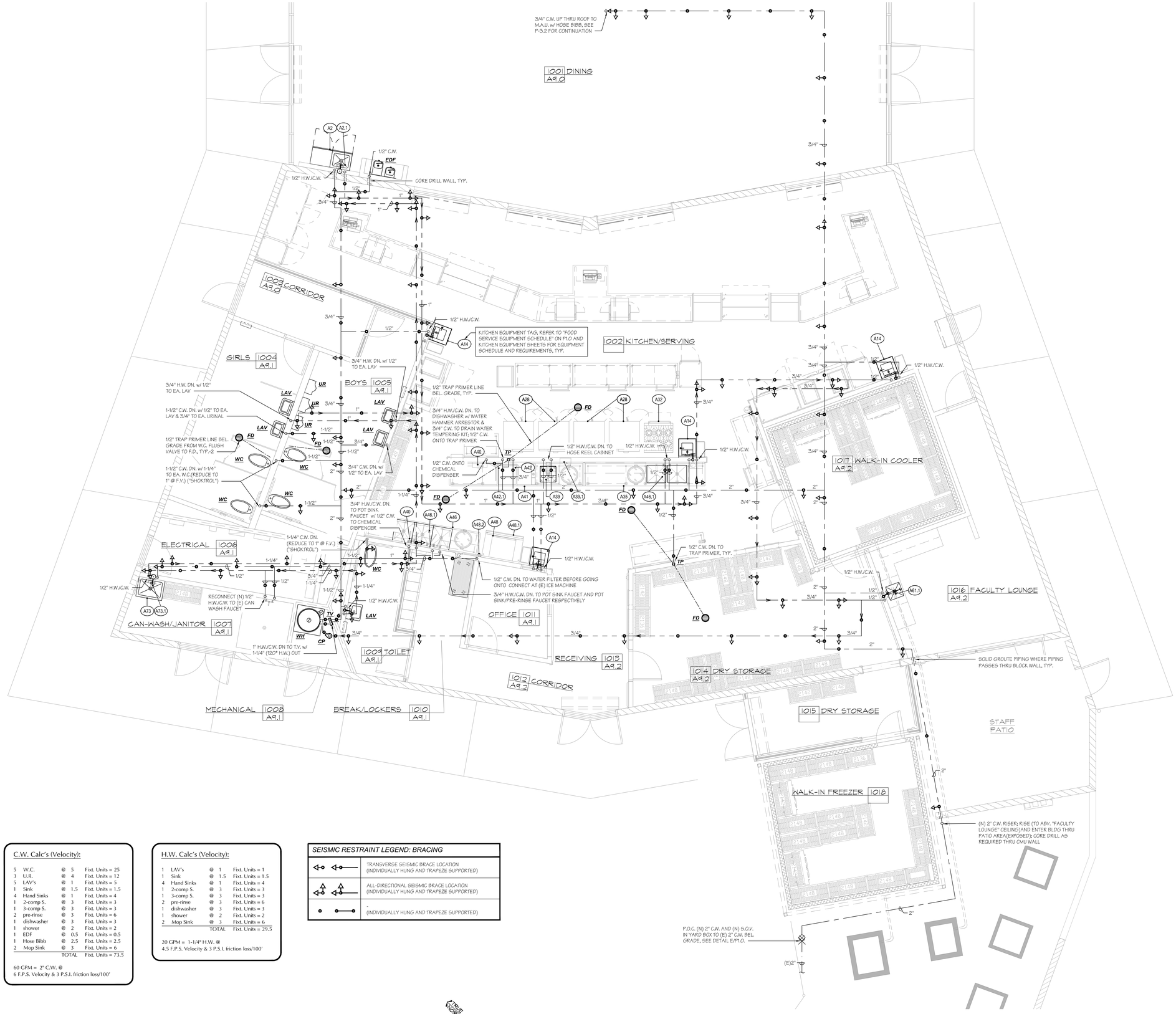

C.W. Calc's (Velocity):

5	W.C.	@	5	Fixt. Units = 25
3	U.R.	@	4	Fixt. Units = 12
5	LAV's	@	1	Fixt. Units = 5
1	Sink	@	1.5	Fixt. Units = 1.5
4	Hand Sinks	@	1	Fixt. Units = 4
1	2-comp S.	@	3	Fixt. Units = 3
1	3-comp S.	@	3	Fixt. Units = 3
2	pre-rinse	@	3	Fixt. Units = 6
1	dishwasher	@	3	Fixt. Units = 3
1	shower	@	2	Fixt. Units = 2
1	EDF	@	0.5	Fixt. Units = 0.5
1	Hose Bibb	@	2.5	Fixt. Units = 2.5
2	Mop Sink	@	3	Fixt. Units = 6
		TOTAL		Fixt. Units = 73.5

60 GPM = 2" C.W. @
6 F.P.S. Velocity & 3 P.S.I. friction loss/100'

H.W. Calc's (Velocity):

1	LAV's	@	1	Fixt. Units = 1
1	Sink	@	1.5	Fixt. Units = 1.5
4	Hand Sinks	@	1	Fixt. Units = 4
1	2-comp S.	@	3	Fixt. Units = 3
1	3-comp S.	@	3	Fixt. Units = 3
2	pre-rinse	@	3	Fixt. Units = 6
1	dishwasher	@	3	Fixt. Units = 3
1	shower	@	2	Fixt. Units = 2
2	Mop Sink	@	3	Fixt. Units = 6
		TOTAL		Fixt. Units = 29.5

20 GPM = 1-1/4" H.W. @
4.5 F.P.S. Velocity & 3 P.S.I. friction loss/100'

SEISMIC RESTRAINT LEGEND: BRACING	
	TRANSVERSE SEISMIC BRACE LOCATION (INDIVIDUALLY HUNG AND TRAPEZE SUPPORTED)
	ALL-DIRECTIONAL SEISMIC BRACE LOCATION (INDIVIDUALLY HUNG AND TRAPEZE SUPPORTED)
	(INDIVIDUALLY HUNG AND TRAPEZE SUPPORTED)

TRUE NORTH

PLAN NORTH

PLUMBING PLAN - WATER

SCALE: 1/4"=1'-0"

BME BASKIN MECHANICAL ENGINEERS
175 Fulton Street
Fresno, CA 93721
Tel: (559) 237-0376
Job: 20141
Plt: 9/10/24

REGISTERED PROFESSIONAL ENGINEER JAMES BASKIN No. M26573 Exp. 06-30-26 MECHANICAL STATE OF CALIFORNIA

IDENTIFICATION STAMP
DIV. OF THE STATE ARCHITECT
APP: 03-122528 INC:
REVIEWED FOR
SS ☑ FLS ☑ ACS ☑
DATE: 01/06/2025

PTN : 63529-385 FILE: 15-H3

HIGHLAND HIGH SCHOOL
CAFETERIA REHABILITATION AND MODERNIZATION
2900 ROYAL SCOTS WAY
FOR
KERN HIGH SCHOOL DISTRICT
BAKERSFIELD, KERN COUNTY, CALIFORNIA

ARCHITECT SCI inc.
1601 NEW STINE ROAD, SUITE 280
BAKERSFIELD, CA 93309
PH: (661) 397-4377
FAX: (661) 397-4378
WWW.SCARCHITECT.COM
LICENSED ARCHITECT STEPHEN J. CORBIN No. C-16785 Exp. 12-31-24 STATE OF CALIFORNIA
STEPHEN J. CORBIN, NCARB, AIA, LEED ®-AP

CHECK AND VERIFY ALL DIMENSIONS BEFORE PROCEEDING WITH THE WORK. REPORT DISCREPANCIES TO THE ARCHITECT. ALL CONSTRUCTION SHALL CONFORM TO THE C.B.C.

KERN HIGH SCHOOL DISTRICT — Tradition of Excellence — Est. 1893

PLUMBING PLAN (WATER)

MARK	DATE	REVISIONS
1		
2		
3		

JOB NO. 1319
DRAWN : MB
CHECKED : MB
DATE : 2/8/22

P

3.1
M OF - SHEETS

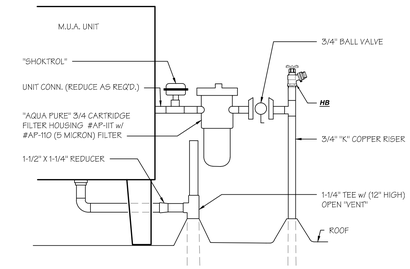

MAKE-UP WATER & DRAIN AT COOLER (A)

SCALE: N.T.S.

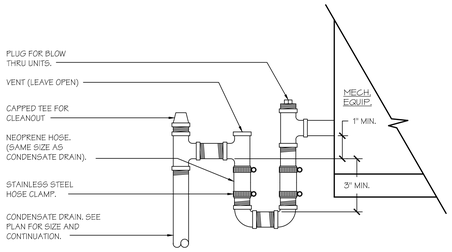

CONDENSATE DRAIN CONNECTION (B)

SCALE: N.T.S.

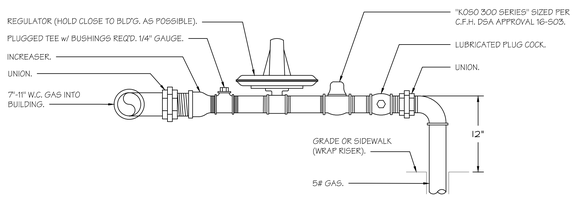

GAS PRESSURE REGULATOR w/ SEISMIC VALVE (C)

SCALE: N.T.S.

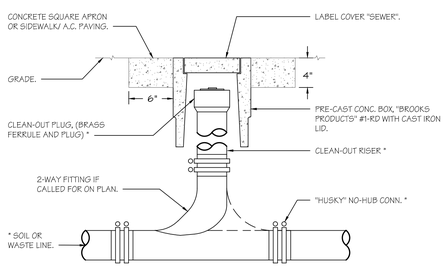

* C.O.T.G. SHOWN 2' OUT FROM BUILDING TO BE 2-WAY IN CAST IRON IF SPEC'D. CALL FOR CAST IRON PIPING, OTHERWISE USE PVC-DWV.

CLEAN-OUT TO GRADE (D)

SCALE: N.T.S.

5# Gas Calc's (1000'):

(N) 1000 = 1514 MBH

1-1/4" G. to start per CPC 2019 Table 1215.2(6)

Low Press. Gas Calc's (175'):

1	A.C.	@	220 MBH = 220
1	Range	@	220 MBH = 220
1	W.H.	@	150 MBH = 150
4	Stacked Ovens	@	230 MBH = 920
			TOTAL MBH = 1510

3" G. to start per CPC 2019 Table 1215.2(1)
* Total developed length = 156 FT.

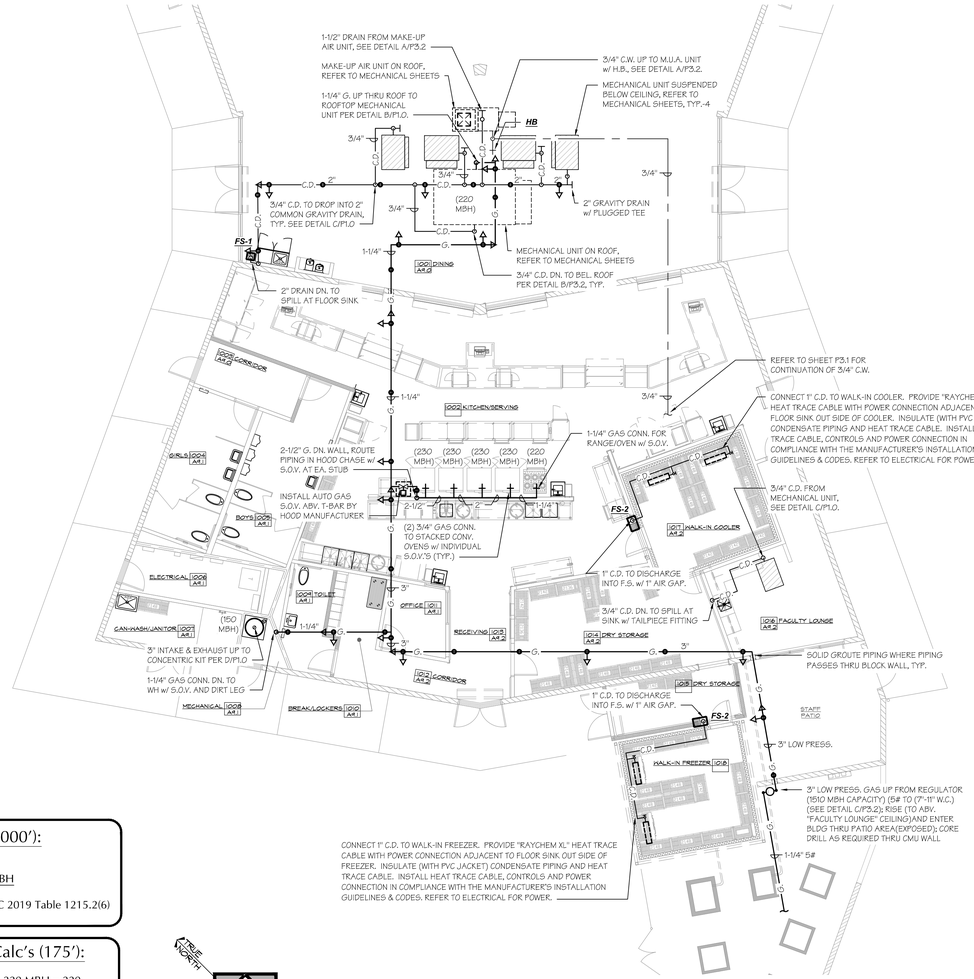

PLUMBING PLAN - GAS & CONDENSATE

SCALE: 1/8"=1'-0"

IDENTIFICATION STAMP
DIV. OF THE STATE ARCHITECT
APP: 03-122528 INC:
REVIEWED FOR
SS ☑ FLS ☑ ACS ☑
DATE: 01/06/2025

PTN : 63529-385 FILE: 15-H3

HIGHLAND HIGH SCHOOL

CAFETERIA REHABILITATION AND MODERNIZATION

2900 ROYAL SCOTS WAY
FOR
KERN HIGH SCHOOL DISTRICT
BAKERSFIELD, KERN COUNTY, CALIFORNIA

SCARCHITECT inc.
1601 NEW STINE ROAD, SUITE 280
BAKERSFIELD, CA 93309
PH: (661) 397-4377
FAX: (661) 397-4378
WWW.SCARCHITECT.COM

LICENSED ARCHITECT STEPHEN J. CORBIN C16736 CALIFORNIA

STEPHEN J. CORBIN, NCARB, AIA, LEED ®-AP

CHECK AND VERIFY ALL DIMENSIONS BEFORE PROCEEDING WITH THE WORK. REPORT DISCREPANCIES TO THE ARCHITECT. ALL CONSTRUCTION SHALL CONFORM TO THE C.B.C.

KERN HIGH SCHOOL DISTRICT — Tradition of Excellence — Est. 2002

PLUMBING PLAN (GAS & CONDENSATE)

MARK	DATE	REVISIONS
1		
2		
3		

REGISTERED PROFESSIONAL ENGINEER — CLARK JAMES BASKIN — No. M26578 — Exp. 12-31-26 — MECHANICAL — STATE OF CALIFORNIA

BASKIN MECHANICAL ENGINEERS
175 Fulton Street
Fresno, CA 93721
Tel: (559) 237-0376
Job: 20141
Plt: 9/10/24

JOB NO.	1319
DRAWN :	MB
CHECKED :	MB
DATE :	2/8/22

P

3.2
M OF - SHEETS

Flow

Highland HS (CUSD)
2900 Royal Scots

PAID
4-18-23
$95

HYDRANT FLOW TEST FORM
CITY OF BAKERSFIELD WATER RESOURCES DEPARTMENT
1000 Buena Vista Road, Bakersfield, CA 93311
Phone: (661) 326-3715 Fax: (661) 852-2127
Email: Water@bakersfieldcity.us

Instructions: Complete Applicant Section • Return to City Water • Pay Fee: $_____

I. PROJECT INFORMATION (TO BE COMPLETED BY APPLICANT)

Name: Swanson Engineering (Mike Noel) Phone: (661) 831-4919
Company Address: 2000 Oak Street Ste 150, Bakersfield, CA 93301 mike@swansonengr.com
Project Address: Highland High School, 2900 Royal Scots Way, Bakersfield, CA 93306
Nearest Cross Street/Distance (ft.): See attached map
Occupancy (Use of Building): N/A Sprinklered (Y/N): N
Square Footage: N/A Number of Stories: N/A

II. FLOW TEST DATA (TO BE COMPLETED BY WATER DEPARTMENT)

FLOW HYDRANT: Private hydrant
ATLAS PAGE: 103-14 HYDRANT #: N/A OUTLET DIAMETER: 4" ✓ 2-1/2"
SIZE & MATERIAL OF WATER MAIN: unknown
Static PSI: 87 Residual PSI: 50 Pitot (PSI): 14 Observed Flow (GPM): 1608
Calculated Fire Flow @ 20 PSI: 2216 Duration of Flow: 1 min. Date and Time: 4/24/2023 8:26am

TEST (RESIDUAL) HYDRANT:
ATLAS PAGE: 103-14 HYDRANT #: d033
SIZE & MATERIAL OF WATER MAIN: 12" & PVC
Static PSI: 87 Residual PSI: 80

TEST (RESIDUAL) HYDRANT:
ATLAS PAGE: _____ HYDRANT #: _____
SIZE & MATERIAL OF WATER MAIN: _____
Static PSI: _____ Residual PSI: _____

III. PUBLIC FIRE HYDRANT FIRE FLOW REQUIREMENTS (TO BE COMPLETED BY WATER DEPARTMENT)

Signature of WATER RESOURCES DEPARTMENT
Tylan S. Hester
Please Print Name
Time: 9:23 (am/pm)
Date: 4-25-23 Title: Supervisor

C:\Users\Schaele\Desktop\HYDRANT FLOW TEST FORM.docx

SCANNED
4/25/2023

Hydrant Flow Test Report

Test Date 4/24/2023 **Test Time** 8:25am

Location
Highland High School
2900 Royal Scots Way

Tested by
Dan Perez
Lilian Vance
Jonathan Prieto

Notes
Read hydrant: Northside of school 715 ft east of Charger Ave & Meadow Vista Street
Flow hydrant: Private onsite hydrant located 800 ft south of the read hydrant.

Read Hydrant
87 psi **static pressure**
50 psi **residual pressure**
839 ft **hydrant elevation**

Flow Hydrant(s)

Outlet	Elev	Size	C	Pitot Pressure	Flow
#1	828	4	.9	14	1608 gpm

Flow Graph

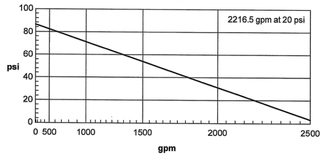

Created with the free hydrant flow test program from www.igneusinc.com

FIRE SPRINKLER MATERIAL SCHEDULE

SPECIFICATION SECTION	DESCRIPTION	MODEL NO.	CSFM LISTING	MANUFACTURER
210500				
2.2	BURIED PIPE			
	IN-BUILDING RISER	SERIES IBR	N/A	AMES
2.3	ABOVE GROUND PIPING			
	PIPE:			
	2½"-6" SCHED. 10	N/A	N/A	BULL MOOSE
	1" - 2" SCHED. 40	N/A	N/A	BULL MOOSE
	FITTINGS:			
	CAST IRON THREADED	N/A	N/A	ANVIL
	GROOVED	VGS	N/A	GRUVLOK
2.4	PIPE HANGERS AND SUPPORTS			
	----	----	----	ANVIL
2.6	GLOBE OR ANGLE VALVES			
	GLOBE VALVE	125SUL	N/A	UNITED BRASS
	ANGLE VALVE	126SUL	N/A	UNITED BRASS
2.8	BUTTERFLY VALVES			
	CHECK VALVES			
2.9	4" GROOVED CHECK VALVE	M-2	N/A	VIKING
211300				
1.5	STRUCTURAL DESIGN AND SEISMIC REQUIREMENTS			
		----	----	ANVIL
2.2	SPRINKLERS			
	DRY PENDENT SR SSP	VK158	N/A	VIKING
	DRY PENDENT SR SSP	VK150	N/A	VIKING
2.3	PIPING SPECIALTIES			
	10" ELECTRIC BELL	PBA-AC	7135-0328:0119	POTTER
	TOTALPAC X SYSTEM	VSR-F		FIREFLEX
	METRAFLEX FIRE LOOP	VSR-F		FIREFLEX

U.S. SEISMIC DESIGN

Ss: .916
Cp: .487

PROTECTION AREAS AND MAXIMUM SPACING OF STANDARD PENDENT AND UPRIGHT SPRAY SPRINKLERS

CONSTRUCTION TYPE	OCCUPANCY TYPE	MAXIMUM SPRINKLER SPACING (ft²)
COMBUSTIBLE OBSTRUCTED CONSTRUCTION	LIGHT HAZARD	130
	ORDINARY HAZARD	130
NONCOMBUSTIBLE UNOBSTRUCTED	LIGHT HAZARD	225
	ORDINARY HAZARD	130

ANY SUBSTITUTION OF "FLEXIBLE" TYPE PIPING IN LIEU OF "RIGID" PIPE OR ANY CHANGES TO SIZE, MANUFACTURER OR LENGTHS OF "FLEXIBLE" TYPE PIPING REQUIRE RESUBMITTAL OF PIPING PLANS, PRODUCT DATA SHEETS AND HYDRAULIC CALCULATIONS TO DSA FOR REVIEW AND APPROVAL. CONTRACTOR SHALL REIMBURSE SCHOOL DISTRICT FOR COST IF ADDITIONAL PLAN CHECK IS REQUIRED.

ANY CHANGES TO THE FIRE SPRINKLER SUPPORT, INCLUDING THE ADDITION OF SWAY BRACING, TO THE APPROVED DSA CONSTRUCTION SET WILL RESULT IN A CHANGE TO THE CONSTRUCTION DOCUMENTS (CCD) AND WILL NEED TO FOLLOW DSA PROCEDURES FOR CCD. CONTRACTOR SHALL REIMBURSE SCHOOL DISTRICT FOR COST IF ADDITIONAL PLAN CHECK IS REQUIRED.

FIRE SPRINKLER LEGEND

SYMBOL	DESCRIPTION
1 FP1	DETAIL DESIGNATION DETAIL NUMBER SHEET NO. WHERE SHOWN
	HYDRAULIC CALCULATION REFERENCE NODE
	EARTHQUAKE BRACE
	FIRE SPRINKLER RISER
	GROOVED COUPLING
/ X	HANGER DESIGNATION
— —	CHANGE IN ELEVATION
	CAP
	PLUG
	VALVE
	FIRE SPRINKLER PIPE
	END OF LINE RESTRAINT

SPRINKLER SYSTEM - GENERAL INFORMATION

FOR	KERN HIGH SCHOOL DISTRICT				
DATE	4/25/2024				
FLOW TEST DATA:					
STATIC:	87	50 PSI	RESID:	50	PSI
FLOW:	1608	GPM	PITOT:	14	PSI
		LOCATION	PRIVATE ON SITE HYDRANT		
LOCATION OF AUX/LOW POINT DRAINS:					
ORIGINAL MAIN DRAIN TEST RESULTS:					
STATIC	X	PSI	RESID:	X	PSI
HIGH PILED:	-	YES	X	NO	
RACK STORAGE:	-	YES	X	NO	
COMMODITY CLASS					
MAXIMUM STORAGE	XX	FT			
AISLE WIDTH (MIN.)	XX	FT			
ENCAPSULATION:	-	YES	X	NO	
SOLID SHELVING:	-	YES	X	NO	
FLAMMABLE / COMBUSTIBLE LIQUIDS	-	YES	X	NO	
OTHER STORAGE:	-	YES	X	NO	
HAZARDOUS MATERIAL	-	YES	X	NO	
IDLE PALLETS	-	YES	X	NO	
ANTIFREEZE SYSTEMS	-	YES	X	NO	
DRY OR AUX SYS	-	YES	X	NO	
LOCATION					
NAME OF CONTRACTOR OR DESIGNER:			BASKIN MECHANICAL ENGINEERS		
ADDRESS & PHONE NUMBER			175 FULTON STREET FRESNO, CA 93721 PH 559-237-0376		

BUILDING DATA

PROJECT DESCRIPTION: INSTALL WET PIPE FIRE SPRINKLER SYSTEM IN NEW CLASSROOM BUILDINGS. WORK TO BEGIN AT CONNECTION, PROVIDED BY OTHERS, 6" ABOVE FINISHED FLOOR.

OWNER: RICHLAND ELEMENTARY SCHOOL DISTRICT

FIRE SPRINKLER SHEET INDEX

SHEET NO.	SHEET TITLE
FP0.0	FIRE SPRINKLER COVER SHEET, INDEX AND LEGENDS
FP0.1	FIRE SPRINKLER NOTES
FP2.0	FIRE SPRINKLER PIPING PLAN, CROSS SECTION & DETAILS

IDENTIFICATION STAMP
DIV. OF THE STATE ARCHITECT
APP: 03-122528 INC:
REVIEWED FOR
SS ☑ FLS ☑ ACS ☑
DATE: 01/06/2025

PTN: 63529-385 FILE: 15-H3

HIGHLAND HIGH SCHOOL
CAFETERIA REHABILITATION AND MODERNIZATION
2900 ROYAL SCOTS WAY
FOR
KERN HIGH SCHOOL DISTRICT
BAKERSFIELD, KERN COUNTY, CALIFORNIA

ARCHITECT SCA inc.
1601 NEW STINE ROAD, SUITE 280
BAKERSFIELD, CA 93309
PH: (661) 397-4377
FAX: (661) 397-4378
WWW.SCARCHITECT.COM

STEPHEN J. CORBIN, NCARB, AIA, LEED®-AP

CHECK AND VERIFY ALL DIMENSIONS BEFORE PROCEEDING WITH THE WORK. REPORT DISCREPANCIES TO THE ARCHITECT. ALL CONSTRUCTION SHALL CONFORM TO THE C.B.C.

KERN HIGH SCHOOL DISTRICT
Tradition of Excellence
Est. 1893

FIRE SPRINKLER COVER SHEET, INDEX & LEGENDS

MARK	DATE	REVISIONS
1		
2		
3		

BASKIN MECHANICAL ENGINEERS
2131 19th St, Suite B
Bakersfield, CA 93301
Tel: (661) 397-2114
Job: XXXXX
Plt: 04-25-24

JOB NO.
DRAWN:
CHECKED:
DATE:

FP0.0
OF SHEETS

OVERHEAD FIRE SPRINKLER SYSTEM NOTES

1. NFPA 13 (2022) SEC. 6.10.2.1.1 UNDERGROUND MAINS AND LEAD-IN CONNECTIONS TO SYSTEM RISERS SHALL BE COMPLETELY FLUSHED BEFORE CONNECTION IS MADE TO THE OVERHEAD FIRE SPRINKLER PIPING SYSTEM. (WITNESSED BY THE INSPECTOR OF RECORD)

2. NFPA 13 (2022) SEC. 18.4.1 CLEARANCE SHALL BE PROVIDED AROUND ALL PIPING EXTENDING THROUGH WALLS, FLOORS, PLATFORMS AND FOUNDATIONS INCLUDING DRAINS SUCH THAT THE DIAMETER OF THE HOLES IS 2 INCHES LARGER THAN THE PIPE FOR 1 INCH TO 3 $\frac{1}{2}$ INCH NOMINAL AND 4 INCHES LARGER THAN THE PIPE FOR PIPE 4 INCH NOMINAL AND LARGER.

3. NFPA 13 (2022) SEC. 29.2.1.1 ALL INTERIOR PIPING AND APPURTENANCES SUBJECTED TO SYSTEM WORKING PRESSURE SHALL BE HYDROSTATICALLY TESTED AT 200 PSI AND SHALL MAINTAIN THAT PRESSURE WITHOUT LOSS FOR 2 HOURS. (WITNESSED BY THE DSA PROJECT INSPECTOR)

4. NFPA 13 (2022) SEC. 16.2.7.1 PROVIDE SPARE SPRINKLER HEAD CABINET, WRENCH, AND NO FEWER THAN A TOTAL OF 6 SPARE SPRINKLER HEADS MATCHING THE TYPES AND TEMPERATURE RATINGS IN EACH PROTECTED BUILDING FOR SYSTEMS WITH LESS THAN 300 SPRINKLERS AND 12 SPARE SPRINKLERS FOR SYSTEMS WITH 300-1000 SPRINKLERS.

5. NFPA 72 (2022) SEC. 5-10.2 SPRINKLER FLOW SWITCHES SHALL BE TESTED BY IOR TO CONFIRM THAT WHEN THE INSPECTORS' TEST VALVE IS ACTIVATED AND ALARM WILL SOUND IN NO LESS THAN 20 SECONDS AND NOT MORE THAN 90 SECONDS.

6. CBC (2022) SEC. 903.4.1 MAIN FIRE ALARM PANEL MONITORING AND WATER FLOW ALARM AND TROUBLE SIGNALS SHALL BE DISTINCTLY DIFFERENT AND SHALL BE AUTOMATICALLY TRANSMITTED TO AN APPROVED CENTRAL STATION MONITORING COMPANY.

7. NFPA 13 (2022) SEC. 6.9 FLOW SWITCHES SHALL BE CONNECTED TO A 10 INCH OUTSIDE ALARM BELL AT EACH RISER. AN APPROVED IDENTIFICATION SIGN SHALL BE PROVIDED FOR THE OUTSIDE ALARM BELL. THE SIGN IS TO READ "SPRINKLER FIRE ALARM-WHEN BELL RINGS CALL 911/FIRE DEPARTMENT"

8. NFPA 13 (2022) SEC. 25.5 HYDRAULIC CALCULATION DESIGN DATA PLACARD IS TO BE ATTACHED TO THE FIRE SPRINKLER SYSTEM RISER.

9. NFPA 13 (2022) SEC. 25.1 THE FIRE SPRINKLER CONTRACTOR (C-16) SHALL COMPLETE AND SIGN THE CONTRACTOR'S MATERIAL AND TEST CERTIFICATE FOR THE OVERHEAD FIRE SPRINKLER SYSTEM USING THE FORM IN FIGURE 24.1. THIS FORM SHALL BE GIVEN TO THE DSA PROJECT INSPECTOR WHO WILL TURN IT IN FOR DSA RECORDS.

10. NFPA 13 (2022) SEC. 25.2.3.4 THE MAIN DRAIN VALVE SHALL BE OPENED AND REMAIN OPEN UNTIL THE SYSTEM PRESSURE STABILIZES. THE STATIC AND RESIDUAL PRESSURES SHALL BE RECORDED ON THE CONTRACTOR'S MATERIAL AND TEST CERTIFICATE. THE TEST IS TO BE WITNESSED BY THE INSPECTOR OF RECORD - IOR.

11. SPRINKLER UPRIGHTS AND DROPS OVER 4 FEET LONG SHALL BE RESTRAINED TO PREVENT DAMAGE TO PIPING OR TO AND FROM ADJACENT BUILDING ELEMENTS.

12. TITLE 19 ARTICLE 906(A) A LABEL OF THE SELF-ADHESIVE TYPE SHALL BE PLACED ON THE FIRE DEPARTMENT CONNECTION OR ON THE RISER FOR FIRE SPRINKLER SYSTEM WITH THE DATE OF SERVICE AND/OR DATE INSTALLATION WAS PERFORMED AND LICENSE NUMBER OF PERSON PERFORMING SERVICE WORK.

14. NFPA 13 (2022) TABLE A.16.7: SIGNAGE SHALL BE PROVIDED AS REQUIRED.

FIRE PROTECTION NOTES

1. ALL WORK AND MATERIALS SHALL BE PERFORMED AND INSTALLED IN COMPLIANCE WITH THE FOLLOWING CODES AS AMENDED AND ADOPTED BY THE INSPECTION AUTHORITY. NOTHING IN THESE PLANS IS TO BE CONSTRUCTED TO PERMIT WORK NOT CONFORMING TO THESE CODES OR OTHERS APPLICABLE TO THIS PROJECT.
   A. CALIFORNIA FIRE CODE, 2022
   B. NFPA-13, 2022
   C. TULARE COUNTY FIRE DEPARTMENT REQUIREMENTS
   D. CALIFORNIA BUILDING CODE - 2022
   E. CALIFORNIA MECHANICAL CODE - 2022
   F. CALIFORNIA PLUMBING CODE - 2022
   G. CALIFORNIA ELECTRICAL CODE - 2022
   H. STATE OF CALIFORNIA ENERGY CONSERVATION REGULATIONS, TITLE 24 - 2022
      NATIONAL FIRE PROTECTION ASSOCIATION

2. SEISMIC RESTRAINT: ALL HUNG PIPING SHALL CONFORM TO NFPA 13, SECTION 18.5. WHERE LATERAL RESTRAINTS ARE OMITTED, PIPING SHALL BE INSTALLED SUCH THAT LATERAL MOTION OF THE PIPING WILL NOT CAUSE DAMAGING IMPACT WITH OTHER SYSTEMS OR STRUCTURAL MEMBERS, OR LOSS OF VERTICAL SUPPORT.

2. THE STRUCTURAL ENGINEER OF RECORD SHALL BE RESPONSIBLE TO VERIFY THE ADEQUACY OF THE STRUCTURE TO SUPPORT THE HANGER AND BRACING LOADS.

3. THE CONTRACTOR SHALL SURVEY EXISTING FIELD CONDITIONS PRIOR TO BIDDING. IF AWARDED THE CONTRACT, THE CONTRACTOR SHALL SURVEY EXISTING FIELD CONDITIONS IN DETAIL AND COORDINATE THE WORK WITH EXISTING BUILDING SYSTEMS.

4. ANY DAMAGE TO NEW BUILDING ARCHITECTURAL, STRUCTURAL, MECHANICAL AND ELECTRICAL SYSTEMS THAT OCCURS DURING THE WORK SHALL BE RESTORED TO THE ORIGINAL CONDITION AT THE CONTRACTOR'S EXPENSE. IF LANDSCAPED AREAS INCLUDING NATURAL SPACES MUST BE USED FOR BUILDING ACCESS, THE LANDSCAPING SHALL BE RETURNED TO ITS ORIGINAL CONDITION. THE CONTRACTOR SHALL INCLUDE COSTS IN THE BID FOR THIS WORK IF THIS APPROACH IS USED. THE OWNER WILL NOT PAY ANY ADDITIONAL COSTS TO COVER DAMAGE TO THE BUILDING SYSTEMS, LANDSCAPING OR DRIVE AREAS.

5. COORDINATE THE FOLLOWING WITH ARCHITECTURAL, STRUCTURAL, MECHANICAL, PLUMBING AND ELECTRICAL DRAWINGS AND ELEMENTS AS INSTALLED, INCLUDING EXISTING BUILDING SYSTEMS:
   A. EXACT LOCATION OF ALL EQUIPMENT.
   B. ALL PENETRATIONS THRU ROOF, WALLS AND FLOORS.
   C. EXACT SIZE AND ROUTING OF PIPING.

6. DRAWINGS INDICATE DIAGRAMMATICALLY THE ARRANGEMENT OF PRINCIPAL APPARATUS, PIPING, AND OTHER MATERIAL. FOLLOW DRAWING AS CLOSELY AS POSSIBLE, IN ORDER TO ACHIEVE A NEAT ARRANGEMENT OF PIPING AND EQUIPMENT WHILE STILL OVERCOMING OBSTRUCTIONS.

7. INSTALLATION OF THE SPRINKLER SYSTEM SHALL NOT BE STARTED UNTIL COMPLETE PLANS AND SPECIFICATIONS, INCLUDING WATER SUPPLY INFORMATION, HAVE BEEN APPROVED BY THE LOCAL FIRE MARSHAL. AT VARIOUS STAGES AND UPON COMPLETION, THE SYSTEM MUST BE TESTED IN THE PRESENCE OF THE AUTHORITY HAVING JURISDICTION.

8. ALL EXISTING FIRE PROTECTION SYSTEMS SHALL REMAIN IN OPERATION DURING ALL PHASES OF CONSTRUCTION. NO SYSTEMS ARE TO BE SHUTDOWN WITHOUT AUTHORIZATION FROM THE OWNER AND LOCAL FIRE DISTRICT.

9. THE LOCATION OF FIRE SPRINKLER HEADS SHALL BE COORDINATED WITH THE NEW CEILING LAYOUTS AND ALL OTHER TRADES FOR COMPLETE FIRE PROTECTION COVERAGE OF ALL AREAS. PROVIDE DETAILED PLANS FOR APPROVAL PRIOR TO INSTALLATION.

10. HEADS SHALL BE SYMMETRICALLY LOCATED IN CENTER OF CEILING PANELS. COORDINATE LAYOUT WITH CEILING OR SOFFIT LIGHT FIXTURES, AND HVAC DIFFUSERS, RETURNS, ETC. PROVIDE PENDENT AND/OR UPRIGHT TYPE SPRINKLER HEAD WHERE REQUIRED.

11. WORKMANSHIP:
    ALL WORK SHALL BE DONE IN A NEAT AND WORKMANLIKE MANNER ACCORDING TO THE BEST TRADE PRACTICE BY THOSE SKILLED IN THE PARTICULAR TRADE. PIPES, EQUIPMENT, ETC., TO BE INSTALLED LEVEL, SQUARE OR CENTERED, ETC., TO GIVE A NEAT AND PLEASING APPEARANCE. ALL EQUIPMENT IS TO BE INSTALLED STRICTLY PER MANUFACTURER'S RECOMMENDATIONS. COORDINATE ALL WORK WITH OTHER TRADES.

12. THE ANNULAR SPACE BETWEEN PIPE SLEEVES AND THE PIPE THROUGH ALL RATED WALLS AND FLOORS SHALL BE FIRESTOPPED. FIRESTOPPING OF ALL PIPE PENETRATIONS SHALL COMPLY WITH U.L. REQUIREMENTS. MANUFACTURER PREAPPROVED UL PENETRATION FOR PIPE MATERIAL AND SURFACE PENETRATED SHALL BE USED. PENETRATIONS SHALL BE 3M, PROSET, OR APPROVED EQUAL. SUBMIT SHOP DRAWINGS.

13. BY OTHERS:
    A. ELECTRICAL CONTRACTOR: ALL POWER AND ALARM WIRING, CONDUITS, DISCONNECTS, AND FINAL CONNECTIONS. NO FIELD SUPPLIED ELECTRICAL DEVICE SHALL BE MOUNTED ON PIPING AND NO RIGID ELECTRICAL CONNECTIONS SHALL BE MADE.
    B. GENERAL CONTRACTOR: CUTTING, FRAMING, PATCHING, FURRING, AND PAINTING.

15. WARRANTY:
    ALL MATERIALS AND EQUIPMENT INSTALLED UNDER THIS CONTRACT SHALL BE GUARANTEED FREE FROM ALL FIRE PROTECTION, ELECTRICAL AND WORKMANSHIP DEFECTS FOR A PERIOD OF ONE YEAR FROM DATE OF FINAL ACCEPTANCE. THE CONTRACTOR SHALL BE RESPONSIBLE FOR ALL DAMAGES TO THE PREMISES CAUSED BY LEAKS AND/OR BREAKS IN PIPES AND FIXTURES INSTALLED UNDER THIS CONTRACT.

16. IT IS THE INTENTION OF THE PLANS AND SPECIFICATIONS TO COVER ALL THINGS REQUIRED TO PROVIDE COMPLETE AND OPERATIVE SYSTEMS. THE CONTRACTOR IS TO FURNISH ALL LABOR, MATERIALS, TRANSPORTATION, EQUIPMENT, MISCELLANEOUS SERVICES, ETC., REQUIRED TO ACCOMPLISH THIS RESULT. ANYTHING WHICH MAY BE REASONABLY CONSTRUED AS A NECESSARY PART OF THE INSTALLATION IS TO BE INCLUDED, WHETHER SPECIFICALLY SHOWN OR MENTIONED. THE ENGINEER WILL GIVE ANY INTERPRETATIONS NECESSARY FOR THE CONTRACTOR TO PROPERLY ESTIMATE THE JOB.

17. IT IS THE CONTRACTORS' RESPONSIBILITY TO PROVIDE FABRICATION OR SHOP DRAWINGS. CAD FILES WILL NOT BE PROVIDED

GENERAL NOTES

1. THE SYSTEM DESIGN AND INSTALLATION SHALL COMPLY WITH NFPA 13, 2022 EDITION AND THE DSA REQUIREMENTS.

2. SYSTEM HYDRAULIC DESIGN IS FOR: NOT APPLICAABLE - PIPE SIZED BY ORDINARY HAZARD PIPE SCHEDULE

3. CITY WATER SUPPLY INFORMATION:
   87 PSI RESIDUAL: 50 PSI GPM: 1608 TEST DATE: 04-24-23
   TEST BY: CITY OF BAKERSFIELD WATER RESOURCES DEPT.

4. ALL PIPE 2" AND SMALLER SHALL BE SCHEDULE 40, BLACK STEEL ANSI/ASTM A135.

5. ALL GROOVED AND WELDED PIPE 2 $\frac{1}{2}$" - 6" SHALL BE SCHEDULE 10, BLACK STEEL ANSI/ASTM A795.

6. THREADED FITTINGS SHALL BE CLASS 125 THREADED CAST IRON ANSI B16.4.

7. ALL THREADED PIPE AND FITTINGS SHALL HAVE THREADS CUT TO ANSI/ASME STANDARD B1.20.1.

8. ALL PIPE WELDING SHALL BE IN COMPLIANCE WITH THE REQUIREMENTS OF AWS D10.9 (STANDARD FOR BUILDING SERVICE PIPING), LEVEL AR-3.

9. ALL PIPE SHALL BE EARTHQUAKE BRACED AS OUTLINED IN NFPA 13, 2022 EDITION, CHAPTER 18, AND AS MODIFIED BY THE 2022 CBC.

10. ALL HANGER COMPONENTS AND INSTALLATION SHALL BE IN ACCORDANCE WITH NFPA 13, 2022 EDITION, SECTION17.2, AND AS MODIFIED BY THE 2022 CBC.

11. ELECTRICAL WIRING AND ANY PAINTING OF THE PIPE THAT MAY BE REQUIRED SHALL BE BY OTHERS.

12. ALL NEW PIPING IS TO BE HYDROSTATICALLY TESTED TO CODE FOR A PERIOD NOT LESS THAN TWO HOURS.

13. FLOW AND TAMPER SWITCHES ARE TO BE PROVIDED ON THE FIRE SPRINKLER SYSTEM. ALL ELECTRICAL WIRING TO BE PROVIDED "BY ELECTRICAL CONTRACTOR."

14. FIRE SPRINKLER SUPPLY AND STUB OUT SHALL BE INSTALLED AND TESTED PER NFPA 24.

15. MAIN FIRE PANEL, VALVE MONITORING, WATER FLOW ALARM AND TROUBLE SIGNALS SHALL BE DISTINCTLY DIFFERENT AND SHALL BE AUTOMATICALLY TRANSMITTED TO AN APPROVED CENTRAL STATION MONITORING COMPANY.

ANY SUBSTITUTION OF "FLEXIBLE" TYPE PIPING IN LIEU OF "RIGID" PIPE OR ANY CHANGES TO SIZE, MANUFACTURER OR LENGTHS OF "FLEXIBLE" TYPE PIPING REQUIRE RESUBMITTAL OF PIPING PLANS, PRODUCT DATA SHEETS AND HYDRAULIC CALCULATIONS TO DSA FOR REVIEW AND APPROVAL. CONTRACTOR SHALL REIMBURSE SCHOOL DISTRICT FOR COST IF ADDITIONAL PLAN CHECK IS REQUIRED.

ANY CHANGES TO THE FIRE SPRINKLER SUPPORT, INCLUDING THE ADDITION OF SWAY BRACING, TO THE APPROVED DSA CONSTRUCTION SET WILL RESULT IN A CHANGE TO THE CONSTRUCTION DOCUMENTS (CCD) AND WILL NEED TO FOLLOW DSA PROCEDURES FOR CCD. CONTRACTOR SHALL REIMBURSE SCHOOL DISTRICT FOR COST IF ADDITIONAL PLAN CHECK IS REQUIRED.

BASKIN MECHANICAL ENGINEERS
2131 19th St, Suite B
Bakersfield, CA 93301
Tel: (661) 397-2114
Job: XXXXX
Plt: 04-25-24

IDENTIFICATION STAMP
DIV. OF THE STATE ARCHITECT
APP: 03-122528 INC:
REVIEWED FOR
SS ☑ FLS ☑ ACS ☑
DATE: 01/06/2025

PTN: 63529-385 FILE: 15-H3

HIGHLAND HIGH SCHOOL
CAFETERIA REHABILITATION AND MODERNIZATION
2900 ROYAL SCOTS WAY
FOR
KERN HIGH SCHOOL DISTRICT
BAKERSFIELD, KERN COUNTY, CALIFORNIA

SCA ARCHITECT INC.
1601 NEW STINE ROAD, SUITE 280
BAKERSFIELD, CA 93309
PH: (661) 397-4377
FAX: (661) 397-4378
WWW.SCARCHITECT.COM
LICENSED ARCHITECT STEPHEN J. CORBIN No. C-16795 Expires 11/30/2025 CALIFORNIA
STEPHEN J. CORBIN, NCARB, AIA, LEED ®-AP

CHECK AND VERIFY ALL DIMENSIONS BEFORE PROCEEDING WITH THE WORK. REPORT DISCREPANCIES TO THE ARCHITECT. ALL CONSTRUCTION SHALL CONFORM TO THE C.B.C.

KERN HIGH SCHOOL DISTRICT
Tradition of Excellence
Est 1893

FIRE SPRINKLER NOTES

MARK	DATE	REVISIONS
1		
2		
3		

JOB NO.
DRAWN:
CHECKED:
DATE:

FP0.1
OF SHEETS

1. VIKING VK150, K5.6, 200° DRY SSU WITH 2-PIECE ESCUTCHEON
2. BRANCH LINE
3. WIDE FLANGE BEAM
4. VIKING VK158, K5.6, 155° DRY SSP WITH SEMI REC. ESCUTCHEON

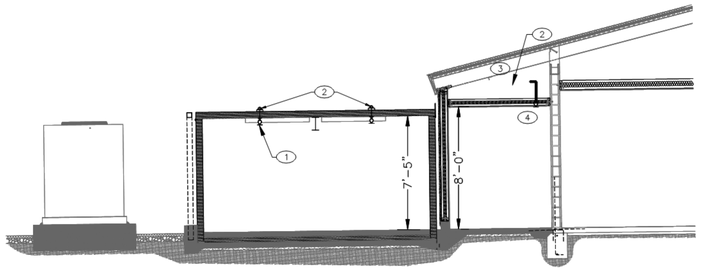

FIRE SPRINKLER BUILDING CROSS SECTION — 1/4"=1'-0" — 6

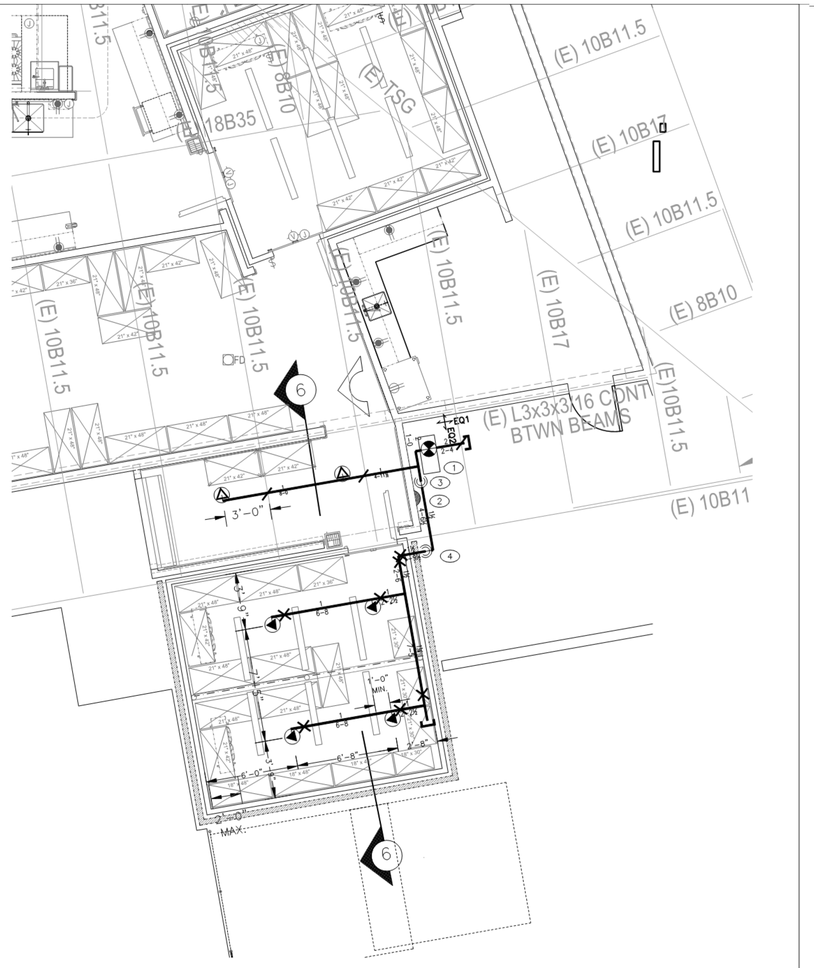

FIRE SPRINKLER BUILDING PIPING PLAN — 1/4"=1'-0" — 1

KEY NOTES

1. TOTALPAC X DRY SYSTEM (2 1/2") WITH HEATER
2. 10" ELECTRIC BELL
3. DROP DOWN TO BELOW GRADE
4. RISE UP TO TOP OF COOLER BOX

GENERAL NOTES

1. CONTRACTOR IS TO COORDINATE WITH ALL OTHER DISCIPLINES. REFER TO ARCHITECTURAL, MECHANICAL AND PLUMBING SHEETS, FIRE PROTECTION SPECIFICATIONS, AS WELL AS OTHER PORTIONS OF THE CONTRACT DOCUMENTS FOR ADDITIONAL COORDINATION REQUIREMENTS.
2. THE LAYOUT REQUIREMENTS DESCRIBED IN THESE PLANS SHALL BE ADHERED TO AS CLOSELY AS POSSIBLE BUT SHALL NOT SUPERSEDED CODE CONSTRAINTS AND/OR REQUIREMENTS OF AUTHORITIES HAVING JURISDICTION (AHJ'S). WHERE CODE OR AHJ REQUIREMENTS SUPERSEDE ITEMS SHOWN ON THIS PLAN, CONTRACTOR SHALL INCLUDE ALL ASSOCIATED PROVISIONS IN THE BID, AND SHALL MAKE THEM AT NO ADDITIONAL COST TO OWNER. PROPOSED DEVIATIONS FROM THIS PLAN SHALL BE SUBJECT TO ENGINEER OF RECORD REVIEW AND APPROVAL PRIOR TO IMPLEMENTATION.
3. ALL AREAS OF THE BUILDING NOT COVERED BY NOTES HEREIN SHALL BE FULLY SPRINKLERED IN ACCORDANCE WITH SPECIFICATIONS, NFPA 13, 2022 ED., KERN COUNTY FIRE DEPARTMENT REQUIREMENTS, DSA FIRE PROTECTION DESIGN STANDARDS AND CODE REQUIREMENTS.
4. WHERE PLAN INDICATES EXPOSED FIRE SPRINKLER PIPING DIRECTION OF LAYOUT, ASSOCIATED CONNECTED FIRE SPRINKLER PIPING RUNNING IN PERPENDICULAR DIRECTIONS SHALL BE INSTALLED ONLY IN CONCEALED LOCATIONS UNLESS INDICATED OTHERWISE.
5. EXPOSED FIRE SPRINKLER SYSTEM PIPING SHALL BE RUN STRAIGHT AND TIGHT TO UNDERSIDE OF STRUCTURAL MEMBERS.
6. SEE DETAILS ON THIS SHEET FOR HANGING AND BRACING METHODS.
7. UNO, ALL HANGERS ARE LESS THAN 6" FROM TOP OF PIPE TO POINT OF CONNECTION TO STRUCTURE. NO BRANCH LINE RESTRAINT IS REQUIRED.
8. FOR FIRE SPRINKLER LEGENDS AND SYMBOLS SEE SHEET FP0.0
9. PIPE SIZED BY ORDINARY HAZARD PIPE SCHEDULE.

FIRE SPRINKLER LEGEND

SYM	QTY	TYPE	FINISH	TEMP	K	NPT	SIN#	MFG	MODEL#	ESCUTCHEON
	06	DRY PEND	CHROME	200°	5.6	1/2"	VK150	VIKING	DRY PEND	2 PIECE
	02	DRY PEND	CHROME	155°	5.6	1/2"	VK158	VIKING	DRY PEND	SEMI RECESS
TOTAL THIS SHEET	08									

FIRE SPRINKLER INFORMATION IS FOR DSA REVIEW ONLY. INSTALLING CONTRACTOR IS RESPONSIBLE FOR VERIFYING ACCURATE SPRINKLER LAYOUT AND QUANTITIES. NO PRICING ADJUSTMENT WILL BE ALLOWED SPRINKLER HEADS ADDED BY CONTRACTOR.

TECHNICAL DATA — STANDARD RESPONSE DRY PENDENT STANDARD ORIFICE SPRINKLERS

The Viking Corporation, 210 N Industrial Park Drive, Hastings MI 49058
Telephone: 269-945-9501 Technical Services: 877-384-5464 Fax: 269-818-1680 Email: techsvcs@vikingcorp.com
Visit the Viking website for the latest edition of this technical data page.

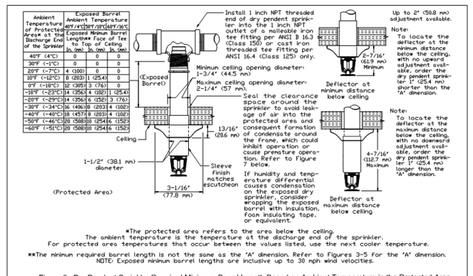

*The protected area refers to the area below the ceiling.
The ambient temperature is the temperature at the discharge end of the sprinkler.
For protected area temperatures that occur between the values listed, use the next cooler temperature.
**The minimum required barrel length is not the same as the "A" dimension. Refer to Figures 3-5 for the "A" dimension.
NOTE: Exposed minimum barrel lengths are inclusive up to 30 mph wind velocities.

Figure 6: Dry Pendent Sprinkler Required Minimum Barrel Length Based on Ambient Temperature in the Protected Area (Adjustable Standard Dry Pendent Sprinkler is shown)

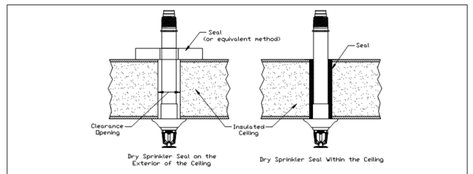

Figure 7: Dry Sprinkler Seal (Adjustable Standard Dry Pendent Sprinkler is Shown)

DRY PENDENT COOLER BOX CEILING PENETRATION — 7

1. ANVIL FIG. AF086 BRACE ADAPTOR
2. ANVIL FIG. 076 SWAY BRACE SWIVEL ATTACHMENT
3. BRACE PIPE - 1" SCHED. 40
4. L/R 200-7'-0" MAX. LENGTH
5. ANVIL FIG. AF033 BRACE CLAMP
6. ⅝" - 13 STUD OR BOLT X 2
7. 1/2" -13 X 1 1/2 HEX BOLT WITH 1/2" HEX NUT

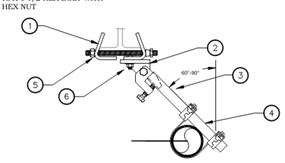

LATERAL EARTHQUAKE BRACE TO STEEL BEAM — EQ1 — 4

1. ANVIL FIG. 93 TOP BEAM C-CLAMP
2. SET SCREW AND LOCKNUT
3. ⅜"ALL THREAD ROD
4. ANVIL FIG. 69 ADJUSTABLE SWIVEL RING HANGER
5. ANVIL AF090 RETAINING STRAP - 1" - 15 GA.

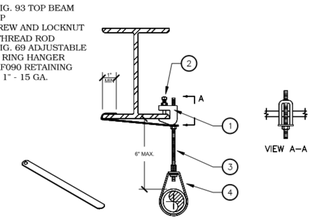

HANGER ATTACHMENT TO STEEL BEAM — 2

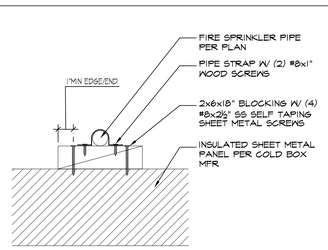

PIPE STRAP DETAIL — 8

1. ANVIL FIG. AF086 SWAY BRACE ADAPTOR
2. ANVIL FIG. AF076 SWAY BRACE SWIVEL ATTACHMENT
3. BRACE PIPE - 1" SCHED. 40
4. L/R 200-7'-0" MAX. LENGTH
5. ANVIL FIG. AF411 LONGITUDINAL SEISMIC BRACE CLAMP
6. ANVIL FIG. AF775RACE ATTACHMENT FITTING
7. 1/2" - 13 STUD OR BOLT X 2
8. 1/2"-13 X 1 1/2 HEX BOLT WITH
9. 1/2" HEX NUT

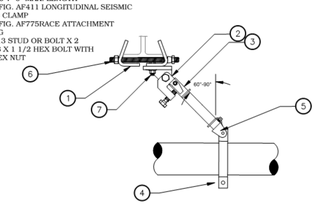

LONGITUDINAL EARTHQUAKE BRACE TO STEEL BEAM — EQ2 — 4

BASKIN MECHANICAL ENGINEERS
2131 19th St, Suite B
Bakersfield, CA 93301
Tel: (661) 397-2114
Job: 20141
Plt: 09-13-24

IDENTIFICATION STAMP
DIV. OF THE STATE ARCHITECT
APP: 03-122528 INC:
REVIEWED FOR
SS ☑ FLS ☑ ACS ☑
DATE: 01/06/2025

PTN: 63529-385 FILE: 15-H3

HIGHLAND HIGH SCHOOL
CAFETERIA REHABILITATION AND MODERNIZATION
2900 ROYAL SCOTS WAY
FOR
KERN HIGH SCHOOL DISTRICT
BAKERSFIELD, KERN COUNTY, CALIFORNIA

ARCHITECT SCA inc.
1601 NEW STINE ROAD, SUITE 280
BAKERSFIELD, CA 93309
PH: (661) 397-4377
FAX: (661) 397-4378
WWW.SCARCHITECT.COM
STEPHEN J. CORBIN, NCARB, AIA, LEED ®-AP

CHECK AND VERIFY ALL DIMENSIONS BEFORE PROCEEDING WITH THE WORK. REPORT DISCREPANCIES TO THE ARCHITECT. ALL CONSTRUCTION SHALL CONFORM TO THE C.B.C.

KERN HIGH SCHOOL DISTRICT — Tradition of Excellence — EST. 1893

FIRESPRINKLER PIPING PLAN, CROSS SECTION & DETAILS

MARK	DATE	REVISIONS
1		
2		
3		

JOB NO.
DRAWN :
CHECKED :
DATE :

FP2.0
OF SHEETS

FAN COIL UNIT SCHEDULE

VRoom Select v2.0.403

		System 1	System 1	System 2
System Tag		System 1	System 1	System 2
Tag Reference		FC-1.1,2.1	FC-1.2,2.2	FC-3
General Data		E / M-1.1	E / M-1.1	F / M-1.1
	Make	Toshiba	Toshiba	Carrier
	Model	MMD-AP0966HP-UL	MMD-AP0726HP-UL	40MBDQ24---3
	Type	High Static Pressure Duct Type	High Static Pressure Duct Type	Ducted Type
	Nominal Cooling Capacity (BTU/h)	96,000.0	72,000.0	24,000.0
	Nominal Heating Capacity (BTU/h)	108,000.0	81,000.0	24,000.0
	Refrig Pipe Dimensions (inch)	7/8 / 1/2	7/8 / 1/2	5/8 / 3/8
	Unit Weight (lbs)	220	220	90
Design Conditions	Project Cooling Design Entering Temp DB/WB (°F)	80.0 / 67.0	80.0 / 67.0	80.0 / 67.0
	Project Heating Design Entering Temp DB (°F)	70.0	70.0	70.0
Performance Data	Cooling Total Capacity (BTU/h)	89,092.1	66,821.5	27,756.2
	Cooling Sensible Capacity (BTU/h)	74,838.9	55,730.3	18,780.7
	Heating Capacity (BTU/h)	77,436.8	58,077.6	33,688.5
	Estimated Cooling Coil LAT (°F)	55.0	56.5	61.4
	Estimated Heating Coil LAT (°F)	95.4	94.1	102.7
Electrical Data	Voltage / Phase	208/230V / 1-phase	208/230V / 1-phase	208/230V / 1-phase
	MCA / MOCP	7.4 / 15	5.7 / 15	Powered by Outdoor
Fan Data	Selected Fan Speed	High	High	High
	Rated Airflow at Selected Fan Speed (cfm)	2825	2236	955
	Max Fan ESP Setting (IN WG)	0.2/0.6/1.0	0.2/0.6/1.0	0.64
	Sound Pressure Per Fan Speed (H/M/L) (dBA)	46/42/38	44/40/36	35.5/40/44
Remote Controller	Zone Remote Controller 1	RBC-AMS54E-UL	RBC-AMS54E-UL	KSAIC0301230
	Zone Remote Controller 2			
	ERV (DI/DO) Interface Model Number			
Notes / Options	Applicable System Notes - See Notes Below	1, 2, 3, 4	1, 2, 3, 4	1, 2, 3, 4

Notes & Options:
1 Nominal cooling capacities are based on indoor air temperature of 80°F DB / 67°F WB, outdoor air temperature of 95°F (DB)
2 Nominal heating capacities are based on indoor air temperature of 70°F DB, outdoor air temperature of 47°F DB / 43°F WB

3 LATs estimated using formula for sensible capacity = (1.08 Btu/(hr cfm °F)) x cfm x deltaT
4 All ductless FMA/FMC/FMU or FV4 series indoor units require a piping adaptor kit (Model #s: 331831-701 or 40MD000003)

HEAT PUMP UNIT SCHEDULE

VRoom Select v2.0.403

		System 1	System 2
System Tag		System 1	System 2
Tag Reference		HP-1,2	HP-3
General Data		C / M-1.1	C / M-1.1
	Make	Toshiba	Toshiba
	Model Number	MMY-MAP1686HT6P-UL	38MARBQ24AA3
	Modules		
	Nominal Cooling Capacity (BTU/h)	168,000.0	24,000.0
	Nominal Heating Capacity (BTU/h)	189,000.0	24,000.0
	System Connected Capacity	100.0%	N/A
	Main Refrigerant Pipe Dims (inch)	1 1/8 / 5/8	5/8 / 3/8
	Preliminary Added Field Charge (lb)	26.7	0.0
	Sound Pressure (dBA)	64 / 65	62
	Unit Weight (lbs)	838.0	134.5
Design Conditions	Project Design Cooling Outdoor Temp DB (°F)	102.0	102.0
	Project Design Heating Outdoor Temp WB[or DB] (°F)	26.0	[28.0]
Performance Data	Corrected Cooling Total Capacity (BTU/h)	155,913.6	27,756.2
	Corrected Heating Capacity (BTU/h)	135,514.4	33,688.5
Electrical Data	Voltage / Phase	460V / 3-phase 4-wire	208/230V / 1-phase 4-wire
	MCA	31.0	25
	Recommended Fuse Size (RFS) [MOCP]	40	[35]
Efficiency Data	Cooling Efficiency IEER[or SEER]/EER	22.4 / 11.1	[20.5]/12.5
	Heating COP @ 47°F [or HSPF]	3.7	[12.5]
Notes / Options	Applicable System Notes - See Notes Below	1, 2, 3, 5	1, 2, 4, 5

Notes & Options:
1 Nominal cooling capacities are based on indoor air temperature of 80°F DB / 67°F WB, outdoor air temperature of 95°F (DB)
2 Nominal heating capacities are based on indoor air temperature of 70°F DB, outdoor air temperature of 47°F DB / 43°F WB
3 VRF Efficiency values for EER, IEER, and COP are for mixed ducted and non-ducted indoor units based on AHRI 1230 test method.
4 Ductless and Single-Phase VRF Heat Pump Efficiency values for EER, SEER, and HSPF are for mixed ducted and non-ducted indoor units based on AHRI 210/240 test method.
5 Preliminary Additional Field Charge is calculated based on software inputs; Final Additional Field Charge must be calculated based on final "as-built" piping dimensions.

6 BACnet interface.

EQUIPMENT SCHEDULE

A / M-1.1 ***AC-1***

Carrier 48HCDD017 15 Ton Rooftop Packaged AC Unit, 6,000 CFM @ 0.80 E.S.P., 4.50 BHP belt drive supply fan motor high stage, 4,000 CFM low stage, horizontal supply and return connections, 183,380 BTUH total / 138,5000 sensible (gross) cooling / 220,000 heating input / 178,000 net heating capacity / 11.5 EER / 13.0 IEER / 81% Thermal Efficiency at ARI conditions. Two-speed fan with VFD control, field supplied fan drive, three stage cooling, two stage heating, 5 year compressor warranty, high and low pressure switches, and anti-short cycle timer. 20.8 Sq. Ft. 2" pleated MERV 13 mixed air filters in factory filter rack. Modulating economizer with differential dry bulb controls, barometric relief hoods mounted on horizontal return duct. Mounting curb with seismic hold down clips, internal high and low compressor protection, hinged access doors with tie-backs, flue discharge deflector (cut level with top of unit), premium efficient indoor fan motor. Field commission supply fan VFD to stage with unit, and outside air damper to stage with supply fan. Include in air balance report high and low stage fan test results. Provide with RTU BACnet open communications card.

Electrical:

Unit: 37.9 MCA / 50 MOCP @ 460v-3ph.

Operating Weight:
Unit and Accessories: 2263 Lbs.
Curb: 237 Lbs.

B / M-1.1 ***ERV-1***

Rooftop Energy Recovery Ventilator, Greenheck ERVe-35-30L. 3,000 CFM outside air @ 0.50" E.S.P., 1.95 BHP, 2,600 CFM exhaust air @ 0.50 E.S.P., 1.23 BHP high stage Demand Controlled Ventilation. 1,000 CFM outside air / 700 CFM exhaust low stage. 3 HP supply fan, 2 HP exhaust fan, VFD driven fan motors, polymer heat recovery wheel, double wall insulated construction, hinged access panels, Permatector finish (gray), temperature wheel control with stop / jog, room mounted CO2 sensor with controls to stage supply and exhaust fans, Funs to run in high stage when room CO2 equals 1000 ppm or greater. Single point power connection, motorized low leak dampers on outside air and exhaust air connections, side discharge air connections, 12 gage welded sloped roof curb, MERV 8 exhaust and outside air filters, factory wired non-fused disconnect, 103.1 / 73.9 outside air conditions summer, 75.0 / 62.5 room conditions, 82.6 / 65.9 leaving air conditions to space. Provide with BACnet open communications card.

Electrical: 9.9 MCA / 15 MOCP @ 460v-3ph.

Operating Weight: 1268 Lbs.
Curb: 190 lbs.

D / M-1.1 ***EF-1***

Greenheck CUE-100-VG Centrifugal Upblast Roof Mounted Exhaust Fan. 925 CFM @ 0.60" E.S.P., 1474 RPM, .18 BHP, 8.8 sones, 1/4 HP direct drive ECM motor. Provide with sloped roof curb, backdraft damper, dial on motor for balancing, bird screen, and NEMA-1 toggle switch. Interlock fan operation with site BACnet EMS system.

Electrical: 1/4 HP @ 115v-1ph.

Operating Weight: 45 Lbs.

G / M-1.1 ***CU-11***

(E) Condensing unit per application no. 03 105 643 to be relocated

Electrical: 16.1 FCA @ 460v-3ph.

Operating Weight: 322 lbs

GRILLE SCHEDULE

CD-1

Titus Model MCD Modular Core Diffuser with T-Bar mount frame and O.B.D. See diffuser sizing chart for neck sizes.

CD-2

Titus Model TDC Louvered Face diffuser, surface mount and O.B.D. See diffuser sizing chart for neck sizes.

DS-1

Titus Model 300RL double deflection duct mounted supply grille O.B.D.

FG-1

Titus Model 50FF Filter Return Grille, with T-Bar mount frame, eggcrate core, 20" x 20" x 2" deep MERV 13 filter.

CR-1

Titus Model 50F eggcrate T-Bar mount grille.

CR-2

Titus Model 50F eggcrate surface mount grille.

CE-1

Titus Model 35RL, 35 degree deflection, surface mounting frame, O.B.D.

CE-2

Titus Model 50F eggcrate T-Bar mount grille with O.B.D.

Note: Paint all visible surfaces behind diffusers and grilles flat black.

DIFFUSER SIZING CHART

CFM	TITUS MCD, SQUARE NECK	CFM	TITUS TDC, SQUARE NECK
0 - 200	6" x 6"	0 - 125	6" x 6"
201 - 300	8" x 8"	126 - 300	9" x 9"
301 - 425	10" x 10"	301 - 500	12" x 12"
426 - 600	12" x 12"	501 - 750	15" x 15"
601 - 700	14" x 14"	751 - 1100	18" x 18"
701 - 850	16" x 16"	951 - 1250	21" x 21"
851 - 950	18" x 18"	1101 - 1500	24" x 24"
951 - 1200	20" x 20"	1501 - 1800	30" x 30"

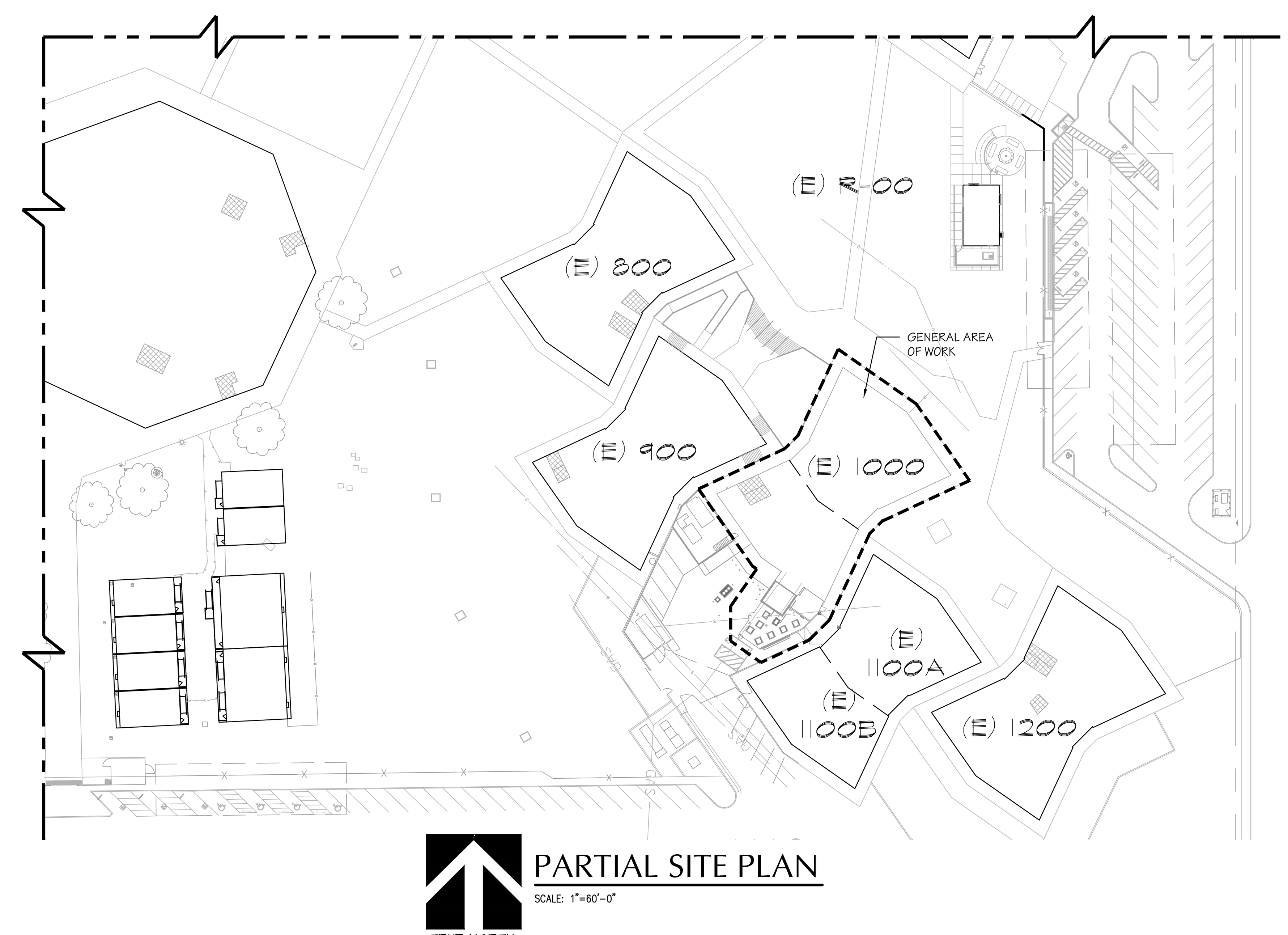

PARTIAL SITE PLAN
SCALE: 1"=60'-0"
TRUE NORTH

TITLE 24 MECHANICAL & PLUMBING REQUIREMENTS (CODE REFERENCES ARE TO 2022 BUILDING ENERGY EFFICIENCY STANDARDS):

1. All air cooled HVAC units shall have minimum efficiencies per Table 110.2-A.
2. All furnaces shall have minimum efficiencies per Table 110.2-J.
3. All furnaces shall have stand by loss controls per section 110.2 (d).
4. All thermostats shall comply with 110 (b) or (c), as applicable.
5. All HVAC systems shall have outside (ventilation) air per 120.1 (b) 2. Also see mechanical plans for minimum outside air settings. Refer to table on plan.
6. When CO2 ventilation demand controls are specified, provide in accordance with 120.1 C. 4.
7. Minimum ventilation rates shall be initiated one hour prior to scheduled occupancy per 120.1 (c) 2.
8. Each HVAC system shall have shut-off and reset controls complying with 120.2 (e).
9. All outside and exhaust dampers shall automatically close per 120.2 (f).
10. All systems greater than a nominal 54 MBH cooling capacity shall have economizers equipped with fault detection and diagnostics per 120.2 (i).
11. All ductwork insulation shall comply with 120.4.
12. Set up all thermostats with a dead band of no less than three degrees to prevent cycling between heating and cooling.
13. Acceptance tests required prior to granting occupancy. NA refers to Non Residential appendices:
    - Outdoor air ventilation systems per NA 7.5.1.
    - Constant volume single zone system controls per NA 7.5.2.
    - Air economizers per NA 7.5.4.
    - Demand control (CO2) controls, when required, per NA 7.5.5.
    - Fault Detection & diagnostics (FDD) per NA 7.5.11.

Equipment Anchorage Notes:

All Mechanical, Plumbing, and Electrical components shall be anchored and installed per the details on the DSA approved construction documents. The following components shall be anchored or braced to meet the force and displacement requirements prescribed in the 2022 CBC, Sections 1617A.1.18 through 1617A.1.26 and ASCE 7-16 Chapters 13, 26 and 30.

1. All permanent equipment and components.
2. Temporary, movable or mobile equipment that is permanently attached (E.G. hard wired) to the building utility services such as electricity, gas or water. "Permanently attached" shall include all electrical connections except plugs for 110/220 volt receptacles having a flexible cable.
3. Temporary, moveable or mobile equipment which is heavier than 400 pounds or has a center mass located 4 feet or more above the adjacent floor or roof level that directly support the component are required to be restrained in a manner approved by DSA.

The following Mechanical and Electrical components shall be positively attached to the structure, but need not demonstrate design compliance with the references noted above. These components shall have flexible connections provided between the component and associated ductwork, piping and conduit. Flexible connections must allow movement in both transverse and longitudinal directions:

A. Components weighing less than 400 pounds and have a center of mass located 4 feet or less above the adjacent floor or roof level that directly support the component.
B. Components weighing less than 20 pounds, or in the case of distributed systems, less than 5 pounds per foot, which are suspended from a roof or floor or hung from a wall.

The anchorage of all Mechanical, Electrical and Plumbing components shall be subject to the approval of the design professional in general responsible charge or structural engineer delegated responsibility and acceptance by DSA. The project inspector will verify that all components and equipment have been anchored in accordance with above requirements.

Piping, Ductwork, and Electrical Distribution System Bracing Note:

Piping, ductwork, and Electrical distribution systems shall be braced to comply with the forces and displacements prescribed in ASCE 7-16 Section 13.3 as defined in ASCE 7-16 Section 13.6.5., 13.6.6, 13.6.7, 13.6.8, and 2022 CBC, Sections 1617A.1.24, 1617A.1.25 and 1617A.1.26.

The method of showing bracing and attachments to the structure for the identified distribution system are as noted below. When bracing and attachments are based on a pre-approved installation guide (e.g., OSHPD OPM for 2013 CBC or later), copies of the bracing system installation guide or manual shall be available on the jobsite prior to the start of and during the hanging and bracing of the distribution systems. The Structural Engineer of Record shall verify the adequacy of the structure to support the hanger and brace loads.

Mechanical Piping (MP), Mechanical Ducts (MD), Plumbing Piping (PP),
Electrical Distribution Systems (E):

MP ☑ MD ☑ PP ☐ E ☐ — **Option 1:** Detailed on the approved drawings with project specific notes and details

MP ☐ MD ☐ PP ☐ E ☐ — **Option 2:** Shall comply with the applicable OSHPD Pre-Approval (OPM#) #________________.

Air Conditioning Legend

SYMBOL	ABBR.	ITEM	SYMBOL	ABBR.	ITEM
	A.C.	Air Conditioning		H.W.R.	Heating Water Return
	A.D.	Access Door		H.W.S.	Heating Water Supply
	A.F.F.	Above Finished Floor		INT.	Internal
	A.H.	Air Handler		LOC.	Location
	B.A.S,	Building Automation System		M.O.	Motor Operated
	B.V.	Butterfly Valve		(N)	New
	C.D.	Condensate Drain		N.C.	Normally Closed
	C.E.	Ceiling Exhaust Register		N.I.C.	Not in Contract
	C.W.R.	Condensor Water Return		N.O.	Normally Open
	C.W.S.	Condensor Water Supply		O.S.A.	Outside Air
	C.H.W.R.	Chilled/Hot Water Return		O.B.D.	Opposed Blade Damper
	C.H.W.S.	Chilled/Hot Water Supply		P.O.C.	Point of Connection
	COMB.	Combustion		P.P	Petes Plug
	CONN.	Connection		PROV.	Provide
	CONT.	Continuation		P.R.V.	Pressure Reducing Valve
	C.R.	Ceiling Return Register		SIM.	Similar
	CLG.	Ceiling	F.S.D.	F.S.D.	Fire / Smoke Damper w/ access panel
	C.S.	Ceiling Supply Register		S.M. or S/M	Sheet Metal
	C.V.	Check Valve		S.O.V.	Shut Off Valve
	D.C.W.	Domestic Cold Water		S.P.S.T.	Single Pole Single Throw
	DIA.	Diameter	T	STAT	Thermostat or Room Sensor
	D.L.	Door Louver		SURF.	Surface
	DN.	Down		(TYP)	Typical
	D.P.D.T.	Double Pole Double Throw		U.G.	Underground
	D.T.R.	Duct Thru Roof		U.N.O.	Unless Noted Otherwise
	(E)	Existing		V.D.	Volume Damper
	E.F.	Exhaust Fan		V.D.	Vol. Damper w/ Remote Operator
	E.M.S.	Energy Management System		W/	With
	EX.	Exhaust		W.R.	Wall Return Register
F.D.	F.D.	Fire Damper w/ acc. panel		W.S.	Wall Supply Register
	Flex. Conn	Flexible Connection			Duct w/ Acoustic Lining
	FLR.	Floor		T.V.	Turning Vanes
	F.T.R.	Flue Thru Roof			Extractor
	Furn.	Furnace	C		CO2 SENSOR
	GA.	Gauge			Union
	GAL.	Gallon			Reducer or Increaser
	GALV.	Galvanized			
	G.P.M.	Gallons per Minute			
	GRD.	Grade			
	G.V.	Gate Valve			

General Project Note:

1. Coordination of work: Layout of materials, equipment and systems is generally diagrammatic unless specifically dimensioned. Some work may be shown offset for clarity. The actual location of all materials, piping, ductwork, fixtures, equipment, supports, etc. shall be carefully planned, prior to installation of any work to avoid all interferences with each other, or with structural, electrical, architectural or other elements. Verify the proper voltage and phase of all equipment with the electrical plans. All conflicts shall be called to the attention of the architect and the engineer prior to the installation of any work or the ordering of any equipment.

2. Cutting, boring, saw cutting or drilling through the new or existing structural elements to be done only when so detailed in the drawings or accepted by the Architect and Structural engineer with the approval of DSA representative.

Codes:

California Code of Regulations (C.C.R)
Part 1 - 2022 California Standards Administrative Code, Title 24, C.C.R.
Part 2 - 2022 California Building Code (C.B.C.), Title 24, C.C.R. Volumes 1-3.
Part 3 - 2022 California Electrical Code, Title 24, C.C.R.
Part 4 - 2022 California Mechanical Code (C.M.C.), Title 24, C.C.R.
Part 5 - 2022 California Plumbing Code (C.P.C.), Title 24, C.C.R.
Part 6 - 2022 California Energy Code, Title 24, C.C.R.
Part 9 - 2022 California Fire Code, Title 24, C.C.R.

Standards and Guides:

ADAAG - American with Disabilities Act, Accessibility Guidelines.
Fixtures - Plumbing fixtures to comply with table 5.303.6 of the California Green Building Standards - 2022 Edition.

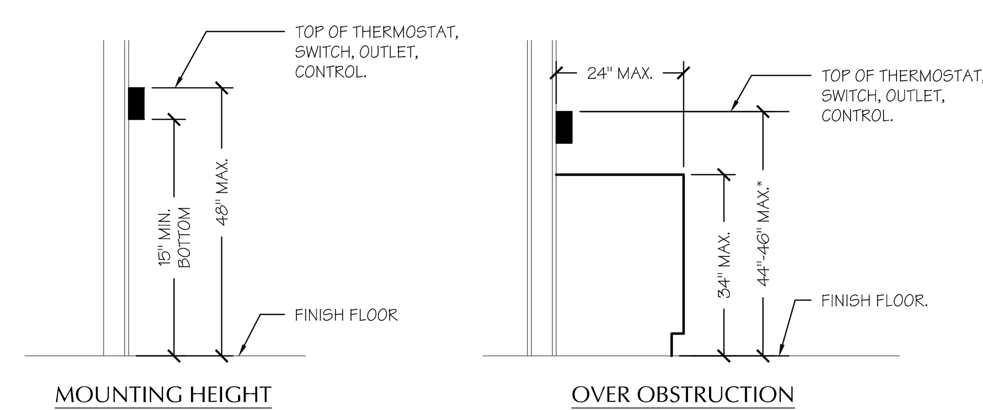

* 44" MAX. FOR WHEEL CHAIR FORWARD APPROACH AND 48" MAX. FOR SIDE APPROACH PER CBC FIGURE 11B-308.2.2 & 11B-308.3.2.

THERMOSTAT MOUNTING LOCATION (A)
SCALE: N.T.S.

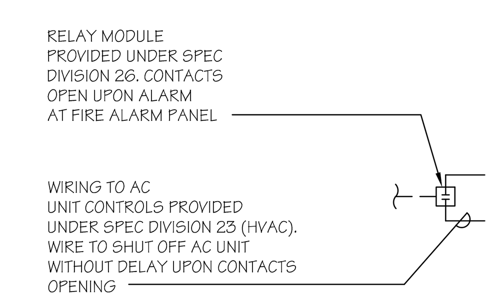

AC-1, MUA-1

MECHANICAL UNIT INTERLOCK w/ F.A.P. (B)
DIAGRAMMATIC

IDENTIFICATION STAMP
DIV. OF THE STATE ARCHITECT
APP: 03-122528 INC:
REVIEWED FOR
SS ☑ FLS ☑ ACS ☑
DATE: 01/06/2025

PTN: 63529-385 FILE: 15-H3

HIGHLAND HIGH SCHOOL
CAFETERIA REHABILITATION AND MODERNIZATION
2900 ROYAL SCOTS WAY
FOR
KERN HIGH SCHOOL DISTRICT
BAKERSFIELD, KERN COUNTY, CALIFORNIA

ARCHITECT SC inc.
1601 NEW STINE ROAD, SUITE 280
BAKERSFIELD, CA 93309
PH: (661) 397-4377
FAX: (661) 397-4378
WWW.SCARCHITECT.COM

LICENSED ARCHITECT STEPHEN J. CORBIN No. C-16788 REN 11/30/25 STATE OF CALIFORNIA
STEPHEN J. CORBIN, NCARB, AIA, LEED ®-AP

CHECK AND VERIFY ALL DIMENSIONS BEFORE PROCEEDING WITH THE WORK. REPORT DISCREPANCIES TO THE ARCHITECT. ALL CONSTRUCTION SHALL CONFORM TO THE C.B.C.

KERN HIGH SCHOOL DISTRICT
Tradition of Excellence
Est. 1893

MECHANICAL NOTES & SCHEDULES

MARK	DATE	REVISIONS
1		
2		
3		

Baskin Mechanical Engineers
175 Fulton Street
Fresno, CA 93721
Tel: (559) 237-0376
Job: 20141
Plt: 9/10/24

REGISTERED PROFESSIONAL ENGINEER MARK JAMES BASKIN No. M26579 Exp. 9-30-26 MECHANICAL STATE OF CALIFORNIA

JOB NO. 1319
DRAWN: MB
CHECKED: MB
DATE: 2/8/22

M 1.0
M OF - SHEETS

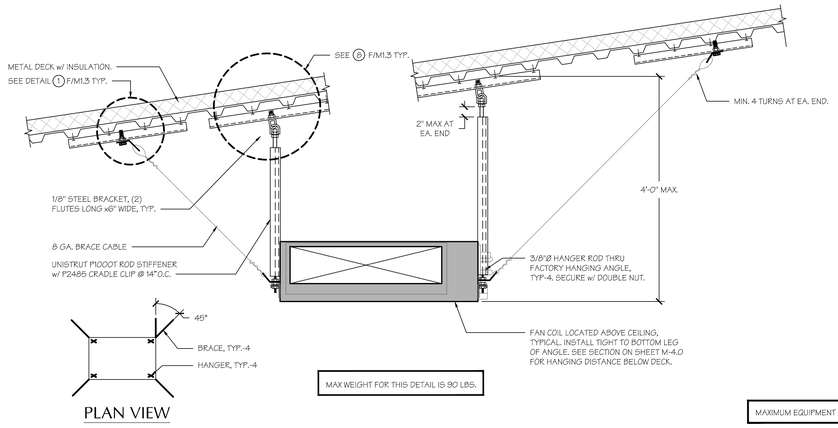

PLAN VIEW

FAN COIL ANCHORAGE (FC-3)

SCALE: N.T.S.

F

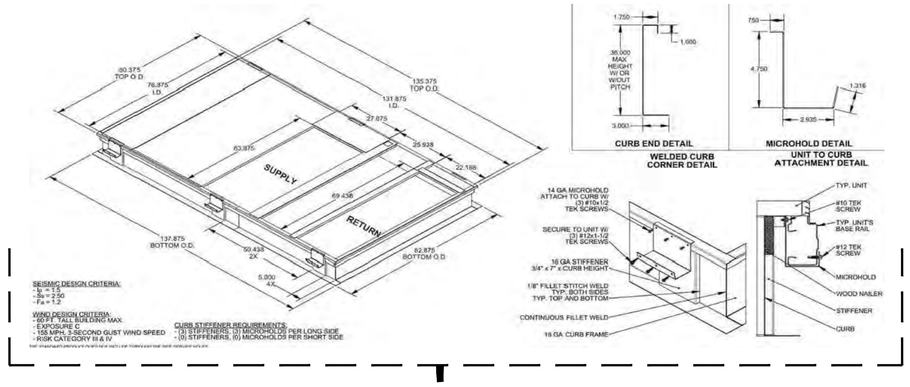

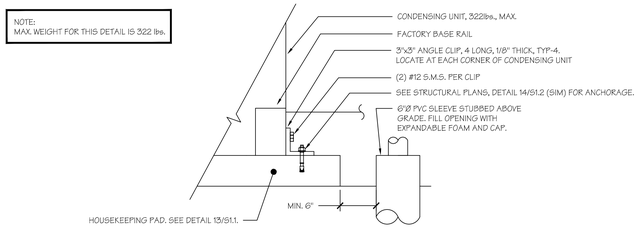

CONDENSING UNIT

SCALE: N.T.S.

G

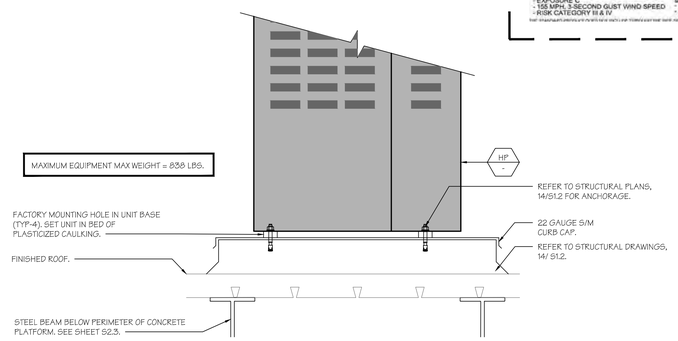

ROOF MTD. HEAT PUMP / CONDENSING UNIT

SCALE: N.T.S.

C

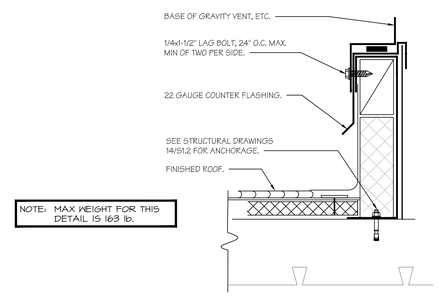

EXHAUST FAN ANCHORAGE

SCALE: N.T.S.

D

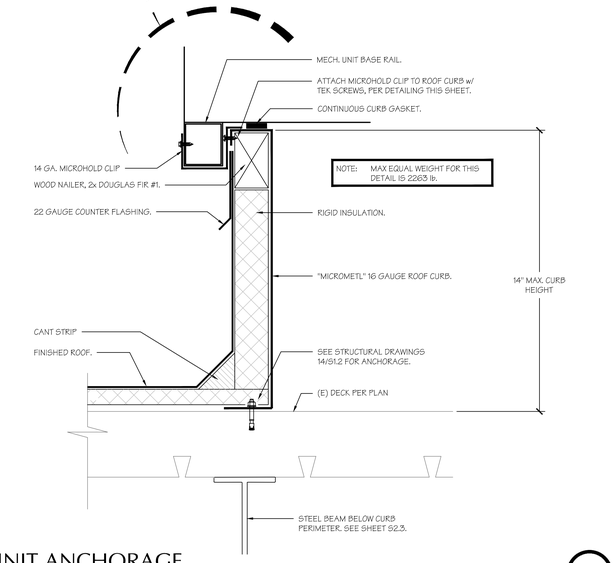

A.C. UNIT ANCHORAGE

SCALE: N.T.S.

A

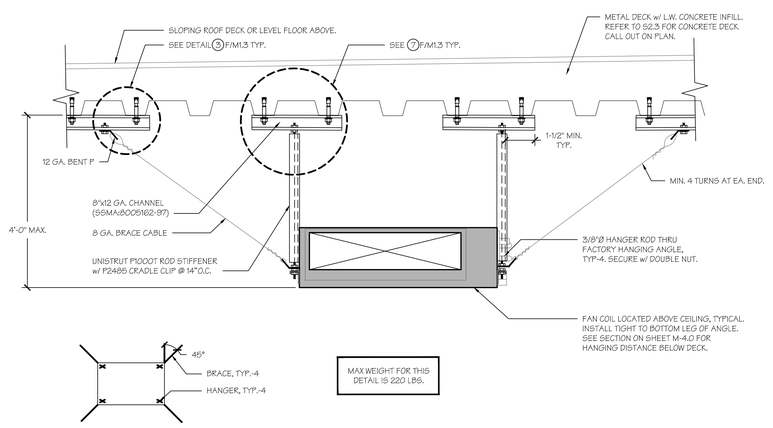

PLAN VIEW

FAN COIL ANCHORAGE (FC-1.1, 1.2, 2.1, 2.2)

SCALE: N.T.S.

E

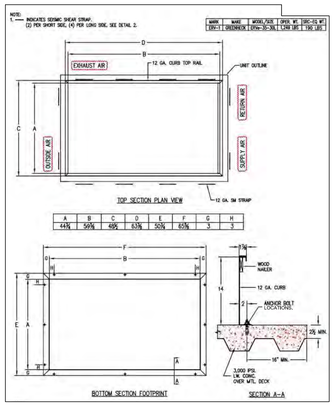

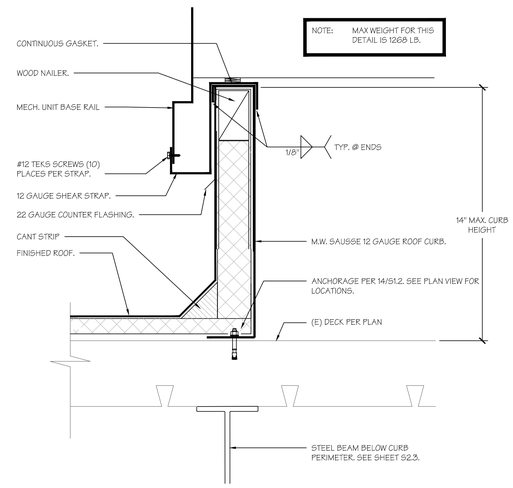

ERV MOUNTING DETAIL

SCALE: N.T.S.

B

BASKIN MECHANICAL ENGINEERS
175 Fulton Street
Fresno, CA 93721
Tel: (559) 237-0376
Job: 20141
Plt: 9/10/24

IDENTIFICATION STAMP
DIV. OF THE STATE ARCHITECT
APP: 03-122528 INC:
REVIEWED FOR
SS ☑ FLS ☑ ACS ☑
DATE: 01/06/2025

PTN : 63529-385 FILE: 15-H3

HIGHLAND HIGH SCHOOL

CAFETERIA REHABILITATION AND MODERNIZATION
2900 ROYAL SCOTS WAY
FOR
KERN HIGH SCHOOL DISTRICT
BAKERSFIELD, KERN COUNTY, CALIFORNIA

ARCHITECT S.A. inc.
1601 NEW STINE ROAD, SUITE 280
BAKERSFIELD, CA 93309
PH: (661) 397-4377
FAX: (661) 397-4378
WWW.SCARCHITECT.COM
STEPHEN J. CORBIN, NCARB, AIA, LEED ®-AP

CHECK AND VERIFY ALL DIMENSIONS BEFORE PROCEEDING WITH THE WORK. REPORT DISCREPANCIES TO THE ARCHITECT. ALL CONSTRUCTION SHALL CONFORM TO THE C.B.C.

KERN HIGH SCHOOL DISTRICT

MECHANICAL DETAILS

MARK	DATE	REVISIONS
1		
2		
3		

JOB NO. 1319
DRAWN : MB
CHECKED : MB
DATE : 2/8/22

M

1.1
M OF - SHEETS

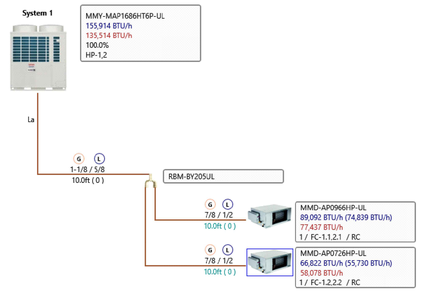

SYSTEM 1 PIPING DIAGRAM (DESIGN VIEW)

SCALE: DIAGRAMMATIC

E

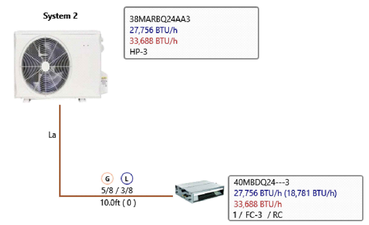

SYSTEM 2 PIPING DIAGRAM (DESIGN VIEW)

SCALE: DIAGRAMMATIC

F

USE FOR C.D. WHERE ADJUSTABLE SUPPORT REQ'D TO MAINTAIN SLOPE.
USE SERIES DBIO FOR REFRIG. PIPING WHEN FLAT RUNS ARE ACCEPTABLE.

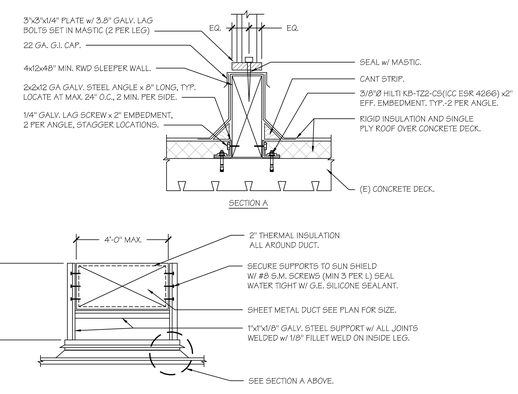

DUCT ON ROOF - SUPPORT

SCALE: N.T.S.

G

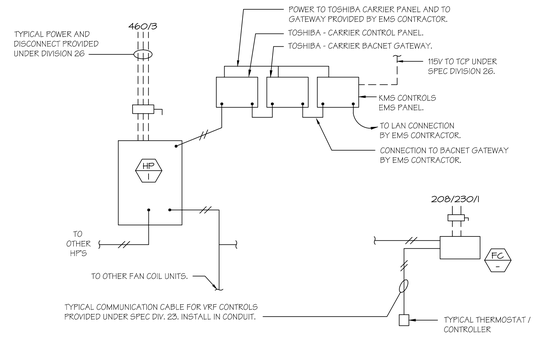

CONTROL WIRING SCHEMATIC

DIAGRAMMATIC

H

BRACING GENERAL NOTES:

1. DUCT BRACE MAX SPACING IS 20' ON CENTER
2. PROVIDE ADDITIONAL BRACE AT EACH 90 DEGREE ELBOW
3. BRACING OF DUCTS MAY BE OMITTED WHEN ALL OF THE FOLLOWING APPLY
   - FLEXIBLE CONNECTIONS OR OTHER ASSEMBLIES ARE PROVIDED BETWEEN THE DUCT SYSTEM AND ASSOCIATED COMPONENTS TO ACCOMMODATE RELATIVE DISPLACEMENTS.
   - THE DUCT SUPPORT SYSTEM IS POSITIVELY ATTACHED TO STRUCTURE.
   - VERTICAL SUPPORT PROVIDED BY 3/8 INCH OR 1/2 INCH DIAMETER ROD HANGERS.
   - EACH ROD IN THE RUN DOES NOT EXCEED 12 INCHES IN LENGTH FROM THE DUCT SUPPORT POINT TO THE STRUCTURE ATTACHMENT POINT.
   - THE TOTAL WEIGHT TO ANY SINGLE ROD IS 50 POUNDS OR LESS.
4. PIPE BRACE MAX SPACING IS 20'-0" ON CENTER
5. PROVIDE ADDITIONAL BRACE AT EACH 90 DEGREE ELBOW.
6. BRACING OF PIPES MAY BE OMITTED WHEN ALL OF THE FOLLOWING APPLY.
   - FLEXIBLE CONNECTIONS, EXPANSIONS LOOPS, OR OTHER ASSEMBLIES ARE PROVIDED TO ACCOMMODATE THE RELATIVE DISPLACEMENT BETWEEN THE EQUIPMENT IE: WATER HEATER AND THE PIPING.
   - THE PIPING SYSTEM IS POSITIVELY ATTACHED THE STRUCTURE.
   - **TRAPEZE ASSEMBLIES**:
     a. THE R_g IS GREATER THAN OR EQUAL TO 4.5 (EXCLUDES PIPES OF GLASS, CAST IRON, AND NON-DUCTILE PLASTICS).
     b. VERTICAL SUPPORT PROVIDED BY 3/8 INCH OR 1/2 INCH DIAMETER ROD HANGERS.
     c. EACH ROD IN THE RUN DOES NOT EXCEED 12 INCHES IN LENGTH FROM THE PIPE SUPPORT POINT TO THE STRUCTURE ATTACHMENT POINT.
     d. NO SINGLE NOMINAL PIPE SIZE EXCEEDS 3 INCHES FOR l_p = 1.0 AND EXCEEDS 2" l_p = 1.5
     e. TOTAL WEIGHT SUPPORTED BY SINGLE TRAPEZE IS 100 POUNDS OR LESS
   - **INDIVIDUALLY SUPPORTED PIPES**:
     b. R_g IS GREATER THAN OR EQUAL TO 4.5 (EXCLUDES PIPES OF GLASS, CAST IRON, AND NON-DUCTILE PLASTICS.)
     c. PIPE DIAMETER DOES NOT EXCEED 3 INCHES WHEN l_p = 1.0, OR EXCEED 1" FOR l_p = 1.5.
     d. VERTICAL SUPPORT IS PROVIDED BY 3/8 INCH OR 1/2 INCH DIAMETER ROD HANGERS.
     e. ROD HANGERS DO NOT EXCEED 12 INCHES IN LENGTH FROM THE PIPE SUPPORT POINT TO THE CONNECTION POINT ON THE SUPPORTING STRUCTURE.
     f. THE TOTAL WEIGHT SUPPORTED BY ANY ROD HANGER IS 50 POUNDS OR LESS.

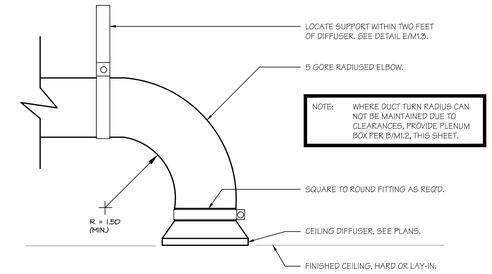

CEILING DIFFUSER/REGISTER CONNECTION

SCALE: N.T.S.

A

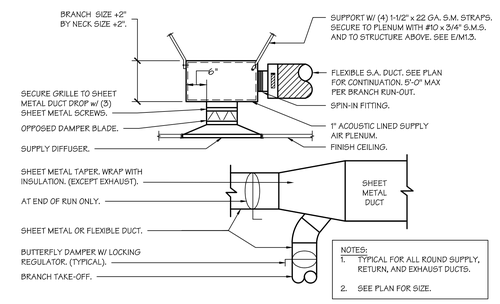

SUPPLY AIR PLENUM & BRANCH TAKE-OFFS

SCALE: N.T.S.

B

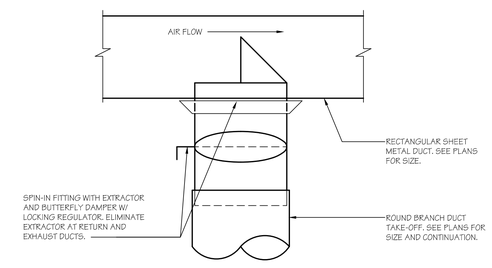

SPIN-IN TAKE OFF

SCALE: N.T.S.

C

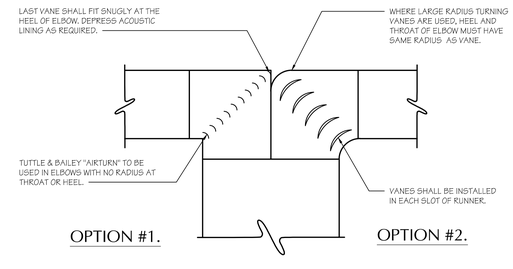

NOTE:
1. TYPICAL FOR ALL RECTANGULAR SUPPLY AND RETURN DUCTS.
2. REFER TO SMACNA FIG. 2-1 & 2-2, TYPICAL.

TURNING VANE

SCALE: N.T.S.

D

IDENTIFICATION STAMP
DIV. OF THE STATE ARCHITECT
APP: 03-122528 INC:
REVIEWED FOR
SS ☑ FLS ☑ ACS ☑
DATE: 01/06/2025

PTN : 63529-385 FILE: 15-H3

HIGHLAND HIGH SCHOOL

CAFETERIA REHABILITATION AND MODERNIZATION
2900 ROYAL SCOTS WAY
FOR
KERN HIGH SCHOOL DISTRICT
BAKERSFIELD, KERN COUNTY, CALIFORNIA

ARCHITECT S.A.I. inc.
1601 NEW STINE ROAD, SUITE 280
BAKERSFIELD, CA 93309
PH: (661) 397-4377
FAX: (661) 397-4378
WWW.SCARCHITECT.COM

LICENSED ARCHITECT STEPHEN J. CORBIN C15738 EXP. 12/31/2025 STATE OF CALIFORNIA

STEPHEN J. CORBIN, NCARB, AIA, LEED ®-AP

CHECK AND VERIFY ALL DIMENSIONS BEFORE PROCEEDING WITH THE WORK. REPORT DISCREPANCIES TO THE ARCHITECT. ALL CONSTRUCTION SHALL CONFORM TO THE C.B.C.

KERN HIGH SCHOOL DISTRICT — Tradition of Excellence — Est. 1893

MECHANICAL DETAILS

MARK	DATE	REVISIONS
1		
2		
3		

REGISTERED PROFESSIONAL ENGINEER MARK "JAMES" BASKIN No. M20657 EXP. 06-30-26 MECHANICAL STATE OF CALIFORNIA

BASKIN MECHANICAL ENGINEERS
175 Fulton Street
Fresno, CA 93721
Tel: (559) 237-0376
Job: 20141
Plt: 9/10/24

JOB NO. 1319
DRAWN : MB
CHECKED : MB
DATE : 2/8/22

M

1.2
M OF - SHEETS

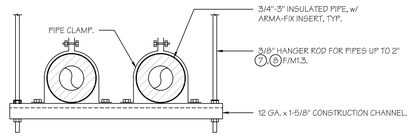

PIPE SUPPORT TRAPEZE

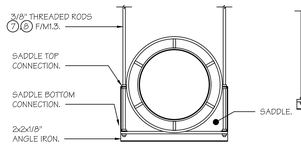

DOUBLE WALL GREASE DUCT

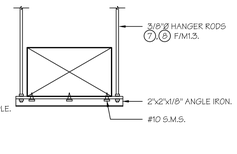

RECTANGULAR DUCT

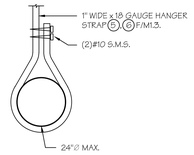

ROUND DUCT

REFRIGERANT PIPE HANGER				
DIA.	SERVICE	MAX WEIGHT lb./ft.	ROD SIZE	MAX SPACING
3/8"	LIQ.	.20	3/8"	6 ft.
1/2"	LIQ.	.28	3/8"	6 ft.
5/8"	LIQ.	.40	3/8"	6 ft.
5/8"	GAS	.30	3/8"	6 ft.
3/4"	GAS	.37	3/8"	6 ft.
7/8"	GAS	.46	3/8"	6 ft.
1-1/8"	GAS	.68	3/8"	6 ft.
1-3/8"	GAS	.92	3/8"	6 ft.
1-5/8"	GAS	1.19	3/8"	6 ft.

ROUND DUCT HANGERS						
CONSTRUCTION	DIA.	GA.	WEIGHT lb./ft.			MAX SPACING
			DUCT	1" INS.	TOTAL	1"x18 GA. STRAP
SPIRAL	20"	26	4.74	3.92	8.66	12 ft.
SPIRAL	18"	26	4.26	3.53	7.79	12 ft.
SPIRAL	16"	26	3.79	3.13	6.92	12 ft.
SPIRAL	14"	28	2.29	2.75	5.04	12 ft.
SPIRAL	12"	28	1.96	2.36	4.32	12 ft.
SPIRAL	10"	28	1.64	1.96	3.60	12 ft.
SPIRAL	9"	28	1.47	1.76	3.23	12 ft.
SNAP LOCK	8"	28	1.30	1.57	2.87	12 ft.
SNAP LOCK	6"	28	0.98	1.18	2.16	12 ft.

RECTANGULAR DUCT HANGERS					
MAX. HALF OF DUCT PERIMETER	GA.	MAX. WEIGHT lb./ft.			MAX SPACING
		DUCT	1" INS.	TOTAL	(2) 3/8" HANGER RODS
P/2=30"	24	4.53	3.75	8.28	10 ft.
P/2=72"	20	19.87	9.00	28.87	10 ft.

DOUBLE WALL GREASE DUCT HANGERS					
DIA.	GA.	WEIGHT lb./ft.			MAX SPACING
		DUCT	1" INS.	TOTAL	(2)3/8" HANGER RODS
20"	26	23.72	3.13	6.92	5 ft.
14"	28	17.19	2.75	5.04	7 ft.

HANGERS

SCALE: N.T.S.

E

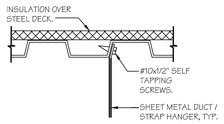

STEEL ROOF DECK 5

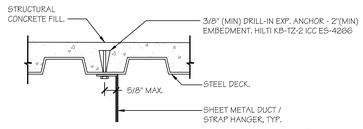

STEEL DECK WITH CONCRETE FILL 6

DUCT STRAP ATTACHMENT

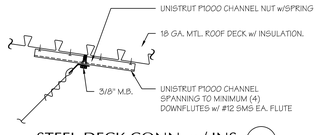

STEEL DECK CONN. w/ INS. 1

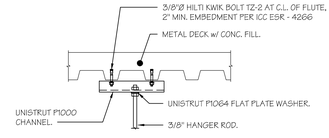

STEEL DECK WITH CONCRETE FILL 7

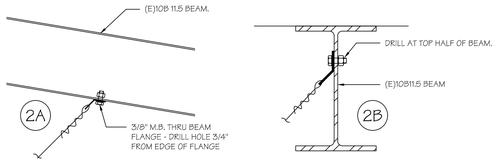

BEAM CONN.'s 2

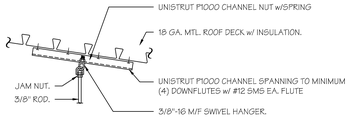

STEEL DECK CONN. w/ INS. 8

HANGER ROD ATTACHMENT

NOTES:
1. MAX HANGER ROD LENGTH LIMITED TO 36".
2. REFER TO ADDITIONAL NOTES ON M1.2 FOR BRACING REQUIREMENTS

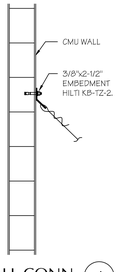

WALL CONN. 4

STEEL DECK WITH CONCRETE FILL 3

BRACE CABLE ATTACHMENT

DUCT HANGER AND BRACING - CONNECTIONS TO STRUCTURE

SCALE: N.T.S.

F

NOTE:
- WHERE 4-WAY BRACE IS REQ'D., PROVIDE (2) ADDITIONAL WIRES AND SPLAY WIRES OUT AT 45°.

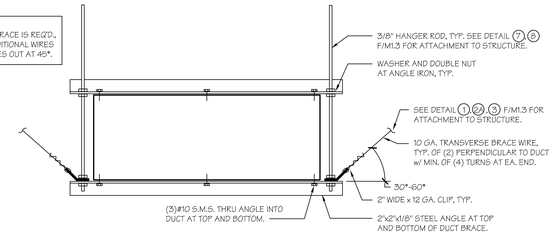

RECTANGULAR DUCT BRACING

SCALE: N.T.S.

A

NOTE:
- WHERE 4-WAY BRACE IS REQ'D., PROVIDE (2) ADDITIONAL WIRES AND SPLAY WIRES OUT AT 45°.

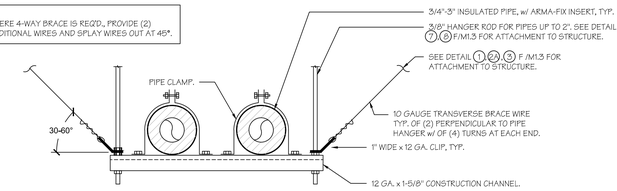

PIPE SUPPORT TRAPEZE

PIPE BRACING

SCALE: N.T.S.

B

NOTE:
- WHERE 4-WAY BRACE IS REQ'D., PROVIDE (2) ADDITIONAL WIRES AND SPLAY WIRES OUT AT 45°.

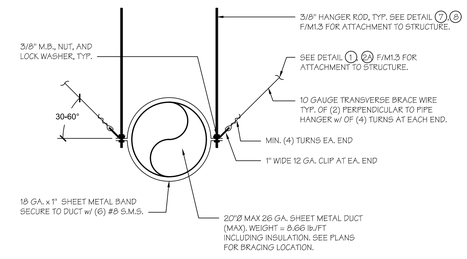

ROUND DUCT BRACING

SCALE: N.T.S.

C

NOTE:
- WHERE 4-WAY BRACE IS REQ'D., PROVIDE (2) ADDITIONAL WIRES AND SPLAY WIRES OUT AT 45°.

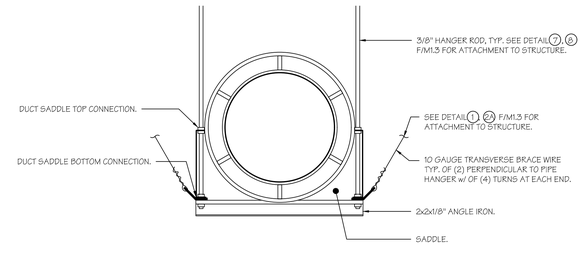

GREASE DUCT BRACING

SCALE: N.T.S.

D

IDENTIFICATION STAMP
DIV. OF THE STATE ARCHITECT
APP: 03-122528 INC:
REVIEWED FOR
SS ☑ FLS ☑ ACS ☑
DATE: 01/06/2025

PTN : 63529-385 FILE: 15-H3

HIGHLAND HIGH SCHOOL
CAFETERIA REHABILITATION AND MODERNIZATION
2900 ROYAL SCOTS WAY
FOR
KERN HIGH SCHOOL DISTRICT
BAKERSFIELD, KERN COUNTY, CALIFORNIA

ARCHITECT SCA inc.
1601 NEW STINE ROAD, SUITE 280
BAKERSFIELD, CA 93309
PH: (661) 397-4377
FAX: (661) 397-4378
WWW.SCARCHITECT.COM
STEPHEN J. CORBIN, NCARB, AIA, LEED ®-AP

CHECK AND VERIFY ALL DIMENSIONS BEFORE PROCEEDING WITH THE WORK. REPORT DISCREPANCIES TO THE ARCHITECT. ALL CONSTRUCTION SHALL CONFORM TO THE C.B.C.

KERN HIGH SCHOOL DISTRICT

MECHANICAL DETAILS

MARK	DATE	REVISIONS
1		
2		
3		

BASKIN MECHANICAL ENGINEERS
175 Fulton Street
Fresno, CA 93721
Tel: (559) 237-0376
Job: 20141
Plt: 9/10/24

JOB NO. 1319
DRAWN : MB
CHECKED : MB
DATE : 2/8/22

M

1.3
M OF - SHEETS

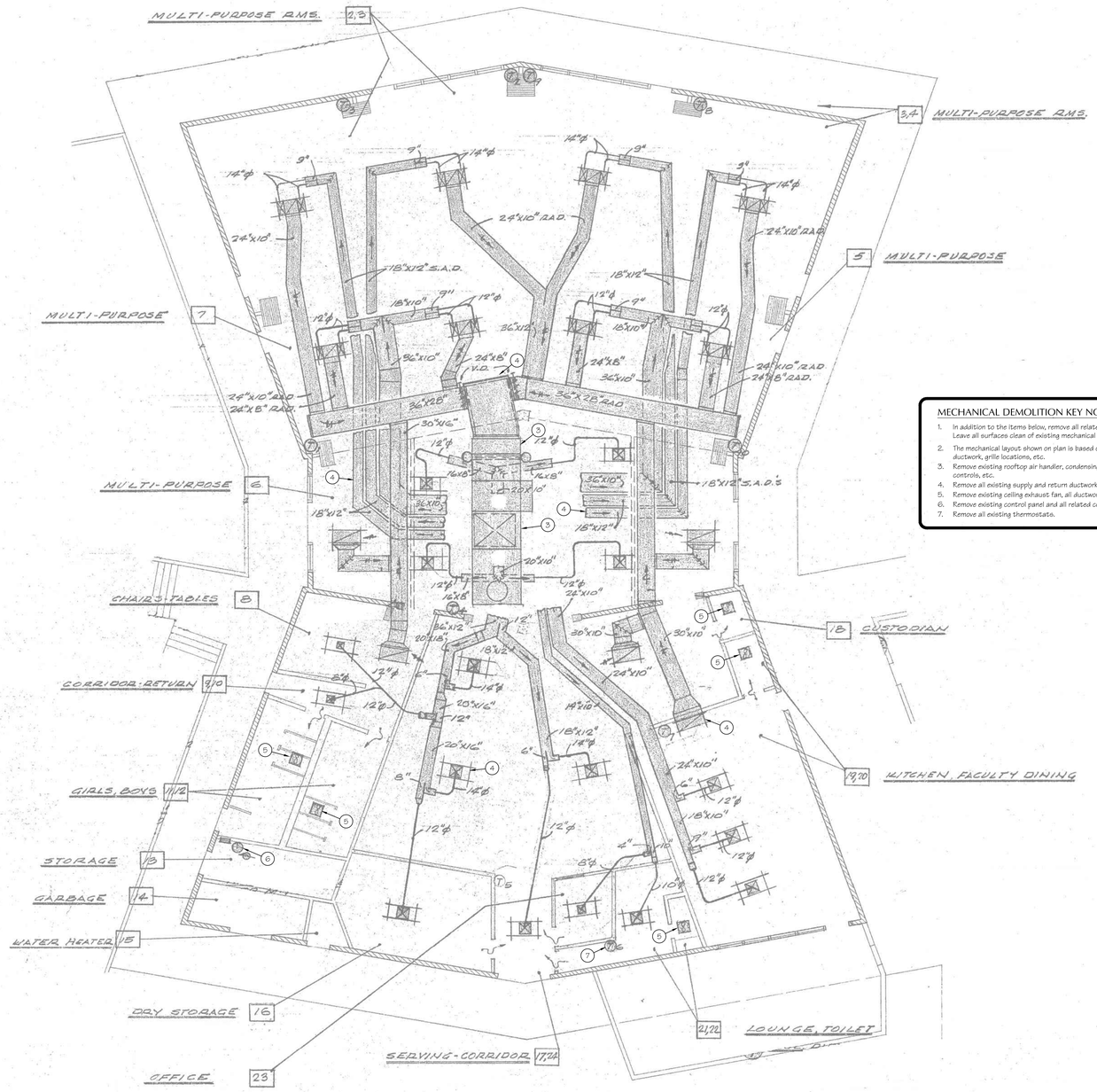

MECHANICAL DEMOLITION KEY NOTES: (#)

1. In addition to the items below, remove all related hangers, anchors, piping, electrical, and controls in their entirety. Leave all surfaces clean of existing mechanical items.
2. The mechanical layout shown on plan is based on record documents. Contractor to field verify exact equipment, ductwork, grille locations, etc.
3. Remove existing rooftop air handler, condensing unit, all mechanical piping, support frame, associated ductwork, controls, etc.
4. Remove all existing supply and return ductwork, supply grilles, and return grilles.
5. Remove existing ceiling exhaust fan, all ductwork, roof cap, etc.
6. Remove existing control panel and all related conduit, controllers, and writing.
7. Remove all existing thermostats.

TRUE NORTH

PLAN NORTH

MECHANICAL DEMOLITION PLAN - BUILDING 1000

SCALE: 1/8"=1'-0"

IDENTIFICATION STAMP
DIV. OF THE STATE ARCHITECT
APP: 03-122528 INC:
REVIEWED FOR
SS ☑ FLS ☑ ACS ☑
DATE: 01/06/2025

PTN : 63529-385 FILE: 15-H3

HIGHLAND HIGH SCHOOL

CAFETERIA REHABILITATION AND MODERNIZATION

2900 ROYAL SCOTS WAY
FOR
KERN HIGH SCHOOL DISTRICT
BAKERSFIELD, KERN COUNTY, CALIFORNIA

ARCHITECT SCA inc.
1601 NEW STINE ROAD, SUITE 280
BAKERSFIELD, CA 93309
PH: (661) 397-4377
FAX: (661) 397-4378
WWW.SCARCHITECT.COM

LICENSED ARCHITECT STEPHEN J. CORBIN C-16786 EXP. 12/31/2025 STATE OF CALIFORNIA

STEPHEN J. CORBIN, NCARB, AIA, LEED ®-AP

CHECK AND VERIFY ALL DIMENSIONS BEFORE PROCEEDING WITH THE WORK. REPORT DISCREPANCIES TO THE ARCHITECT. ALL CONSTRUCTION SHALL CONFORM TO THE C.B.C.

KERN HIGH SCHOOL DISTRICT
Tradition of Excellence
Est. 1893

MECHANICAL DEMOLITION PLAN BLD.1000

MARK	DATE	REVISIONS
1		
2		
3		

REGISTERED PROFESSIONAL ENGINEER MARK JAMES BASKIN No. M26671 Exp. 12-30-26 MECHANICAL STATE OF CALIFORNIA

BASKIN MECHANICAL ENGINEERS
175 Fulton Street
Fresno, CA 93721
Tel: (559) 237-0376
Job: 20141
Plt: 9/10/24

JOB NO. 1319
DRAWN : MB
CHECKED : MB
DATE : 2/8/22

M

2.0
M OF - SHEETS

DEMOLITION KEY NOTES - MECHANICAL YARD:

1. Remove existing condensing unit. Evacuate existing refrigerant per code. Protect unit from damage - reinstall per sheet M-3.2
2. Remove existing refrigerant line set and 6" PVC sleeve below grade back to point of connection noted, typical. Cap pipe, pressure test, and provide holding charge with dry nitrogen.
3. Demo back to this point, typical.
4. Existing below grade refrigerant piping to building 1100 fancoils. See sheet M-3.2.

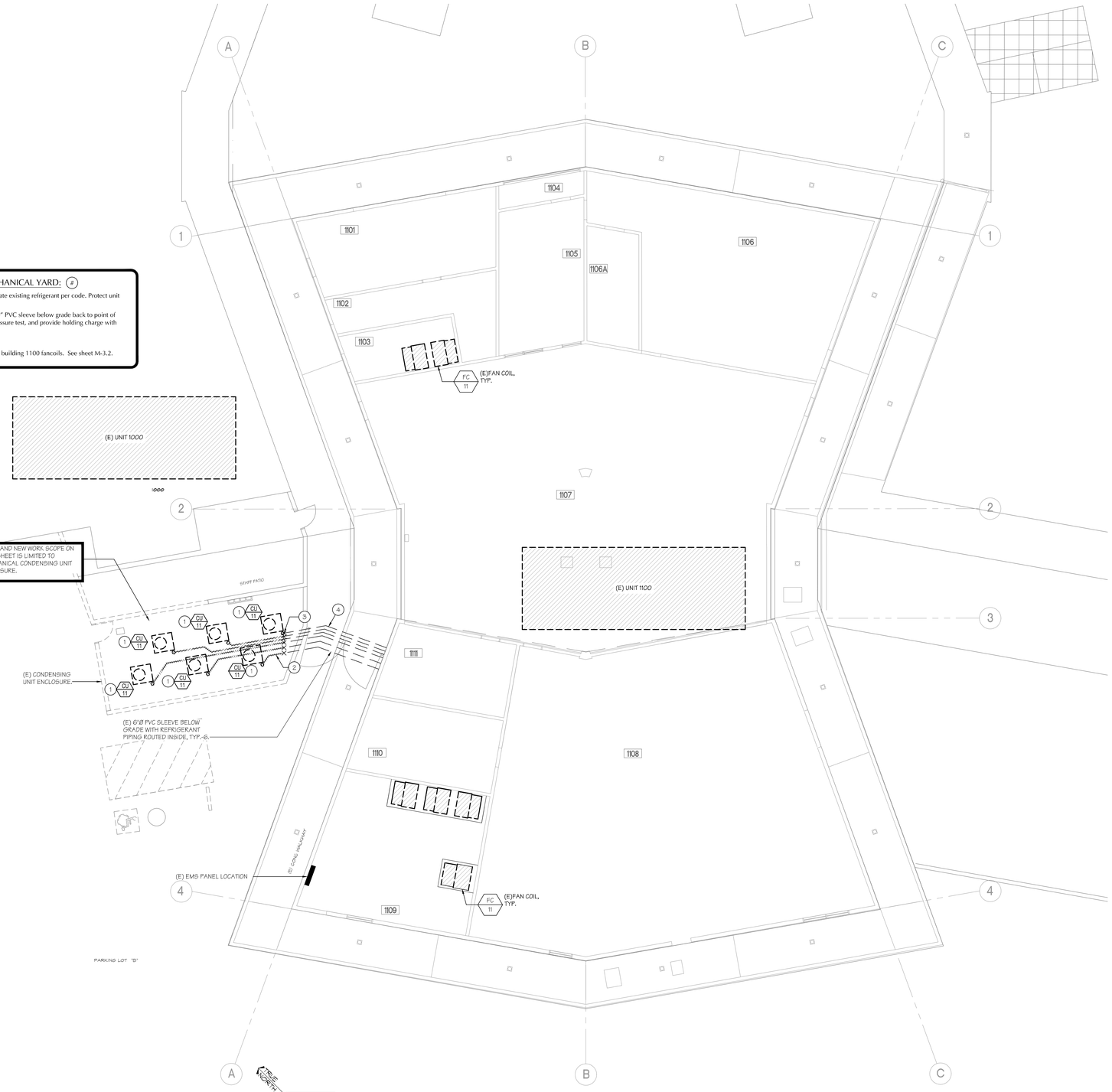

BUILDING 1100 MECHANICAL YARD DEMOLITION PLAN

SCALE: 1/8"=1'-0"

BASKIN MECHANICAL ENGINEERS
175 Fulton Street
Fresno, CA 93721
Tel: (559) 237-0376
Job: 20141
Plt: 9/10/24

REGISTERED PROFESSIONAL ENGINEER
MARK JAMES BASKIN
No. M26671
Exp. 06-30-26
MECHANICAL
STATE OF CALIFORNIA

IDENTIFICATION STAMP
DIV. OF THE STATE ARCHITECT
APP: 03-122528 INC:
REVIEWED FOR
SS ☑ FLS ☑ ACS ☑
DATE: 01/06/2025

PTN : 63529-385 FILE: 15-H3

HIGHLAND HIGH SCHOOL

CAFETERIA REHABILITATION AND MODERNIZATION

2900 ROYAL SCOTS WAY
FOR
KERN HIGH SCHOOL DISTRICT
BAKERSFIELD, KERN COUNTY, CALIFORNIA

ARCHITECT SCI inc.
1601 NEW STINE ROAD, SUITE 280
BAKERSFIELD, CA 93309
PH: (661) 397-4377
FAX: (661) 397-4378
WWW.SCARCHITECT.COM

LICENSED ARCHITECT
STEPHEN J. CORBIN
No. C-16385
Exp. 12-31-25
STATE OF CALIFORNIA

STEPHEN J. CORBIN, NCARB, AIA, LEED ®-AP

CHECK AND VERIFY ALL DIMENSIONS BEFORE PROCEEDING WITH THE WORK. REPORT DISCREPANCIES TO THE ARCHITECT. ALL CONSTRUCTION SHALL CONFORM TO THE C.B.C.

KERN HIGH SCHOOL DISTRICT
Tradition of Excellence
Est. 1893

MECHANICAL DEMOLITION PLAN BLD.1100

MARK	DATE	REVISIONS
1		
2		
3		

JOB NO. 1319
DRAWN : MB
CHECKED : MB
DATE : 2/8/22

M

2.1
M OF - SHEETS

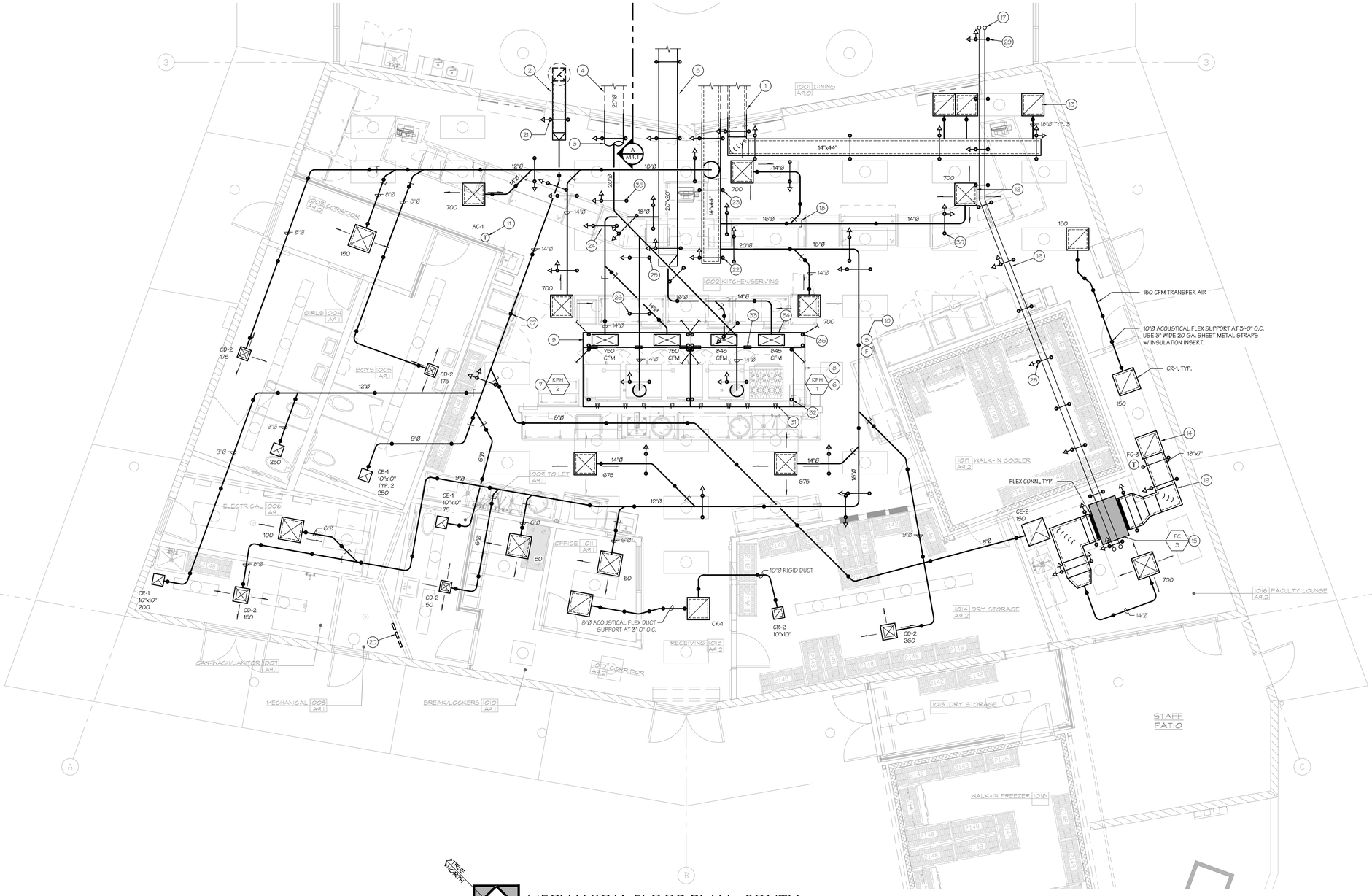

TRUE NORTH

PLAN NORTH

MECHANICAL FLOOR PLAN - SOUTH

SCALE: 1/4"=1'-0"

MECHANICAL PLAN KEY NOTES: (#)

1. 14" x 44" supply and return ducts from AC-1 thru sidewall with 2" liner, 18" x 48" net.
2. 12" x 12" exhaust duct to EF-1 with 1" liner, 14" x 14" net.
3. Captive Aire Double Walled UL listed grease duct, typical.
4. See roof plan for continuation.
5. 20" x 20" wrapped make-up-air duct from MUA-1.
6. Kitchen Hood-1. See detail on sheet A/M5.1.
7. Kitchen Hood-2. See detail on sheet B/M5.1.
8. Utility cabinet with Demand Control Ventilation controls and Ansul Fire Suppression system. See sheets M5.4, M5.5, and M5.6.
9. Perforated supply plenum. See detail on sheet M5.0. Balance each supply drop to CFM noted, typical.
10. Ansul Fire Suppression System pull box and Captive Aire Systems room temperature sensor located on wall. Coordinate location and access to pull box with other trades.
11. Room thermostat. See detail A/M1.0.
12. CD-1 modular core ceiling diffuser, typical at T-Bar ceilings. See detail A/M1.2.
13. CR-1 return grille, typical at T-Bar ceilings.
14. FG-1 filter grille with 14" round riser to lined return plenum.
15. See detail F/M1.1 for anchorage of FC-3.
16. Refrigerant piping routed between fan coils and outdoor heat pump. See piping diagram F/M1.2 for line sizes.
17. Refrigerant line risers thru roof.
18. Branch duct volume damper, typ. See detail B/M1.2.
19. Typical turning vanes at mitered elbow. See detail D/M1.2.
20. HVAC control panels. See H/M1.2.
21. Rectangular duct w/ transverse brace, typical. See detail A/M1.3.
22. Rectangular duct w/ transverse & longitudinal brace, typical. See detail A/M1.3.
23. Typical rectangular duct trapeze hanger. See detail E/M1.3.
24. Round duct w/ transverse brace, typical. See detail C/M1.3.
25. Grease duct hanger, w/ transverse brace, typical. See detail D/M1.3.
26. Round duct trapeze hanger, typical for all double wall grease duct. See detail E/M1.3.
27. Round duct w/ single strap hanger, typical. See detail E/M1.3.
28. Trapeze pipe hanger w/ transverse brace, typical. See detail B/M1.3.
29. Trapeze pipe hanger w/ transverse & longitudinal brace, typical. See detail B/M1.3.
30. Round duct w/ transverse & longitudinal brace, typical. See detail C/M1.3.
31. Bracing clips at back of hood to secure at 2x6 wall framing. See A/M5.0 and A&B/M5.1.
32. 1/2" hanger rod location, typical for exhaust hood and perforated supply plenum. See A/M5.0 and A&B/M5.1.
33. Manufacturer provided attaching plate connecting exhaust hood perforated supply plenum, typical. See detail A/M5.0.
34. 28"x12" S.A. drop to conn. at perforated supply plenum, typical.
35. Grease duct hanger w/ transverse and longitudinal brace, typical. See detail D/M1.3.
36. 1/2" hanger rod w/ brace wire location, typical. See detail A/M5.0 and A&B/M5.1. See detail F/M1.3 for hanger rod upper attachment. See detail F/M1.3 for brace wire conn. to existing roof framing.

SEISMIC RESTRAINT LEGEND

	TRANSVERSE SEISMIC BRACE LOCATION
	TRANSVERSE AND LONGITUDINAL SEISMIC BRACE LOCATION
	- (INDIVIDUALLY HUNG AND TRAPEZE SUPPORTED)

REGISTERED PROFESSIONAL ENGINEER MARK JAMES BASKIN No. M26571 EXP. 12-30-26 MECHANICAL STATE OF CALIFORNIA

BASKIN MECHANICAL ENGINEERS
175 Fulton Street
Fresno, CA 93721
Tel: (559) 237-0376
Job: 20141
Plt: 9/10/24

IDENTIFICATION STAMP
DIV. OF THE STATE ARCHITECT
APP: 03-122528 INC:
REVIEWED FOR
SS ☑ FLS ☑ ACS ☑
DATE: 01/06/2025

PTN : 63529-385 FILE: 15-H3

HIGHLAND HIGH SCHOOL

CAFETERIA REHABILITATION AND MODERNIZATION

2900 ROYAL SCOTS WAY
FOR
KERN HIGH SCHOOL DISTRICT
BAKERSFIELD, KERN COUNTY, CALIFORNIA

SCA ARCHITECT inc.
1601 NEW STINE ROAD, SUITE 280
BAKERSFIELD, CA 93309
PH: (661) 397-4377
FAX: (661) 397-4378
WWW.SCARCHITECT.COM

LICENSED ARCHITECT STEPHEN J. CORBIN C16782 EXP. 12/31/2025 STATE OF CALIFORNIA

STEPHEN J. CORBIN, NCARB, AIA, LEED ®-AP

CHECK AND VERIFY ALL DIMENSIONS BEFORE PROCEEDING WITH THE WORK. REPORT DISCREPANCIES TO THE ARCHITECT. ALL CONSTRUCTION SHALL CONFORM TO THE C.B.C.

KERN HIGH SCHOOL DISTRICT — Tradition of Excellence — Est. 1893

MECHANICAL PLAN SOUTH BUILDING 1000

MARK	DATE	REVISIONS
1		
2		
3		

JOB NO. 1319
DRAWN : MB
CHECKED : MB
DATE : 2/8/22

M

3.0
M OF - SHEETS

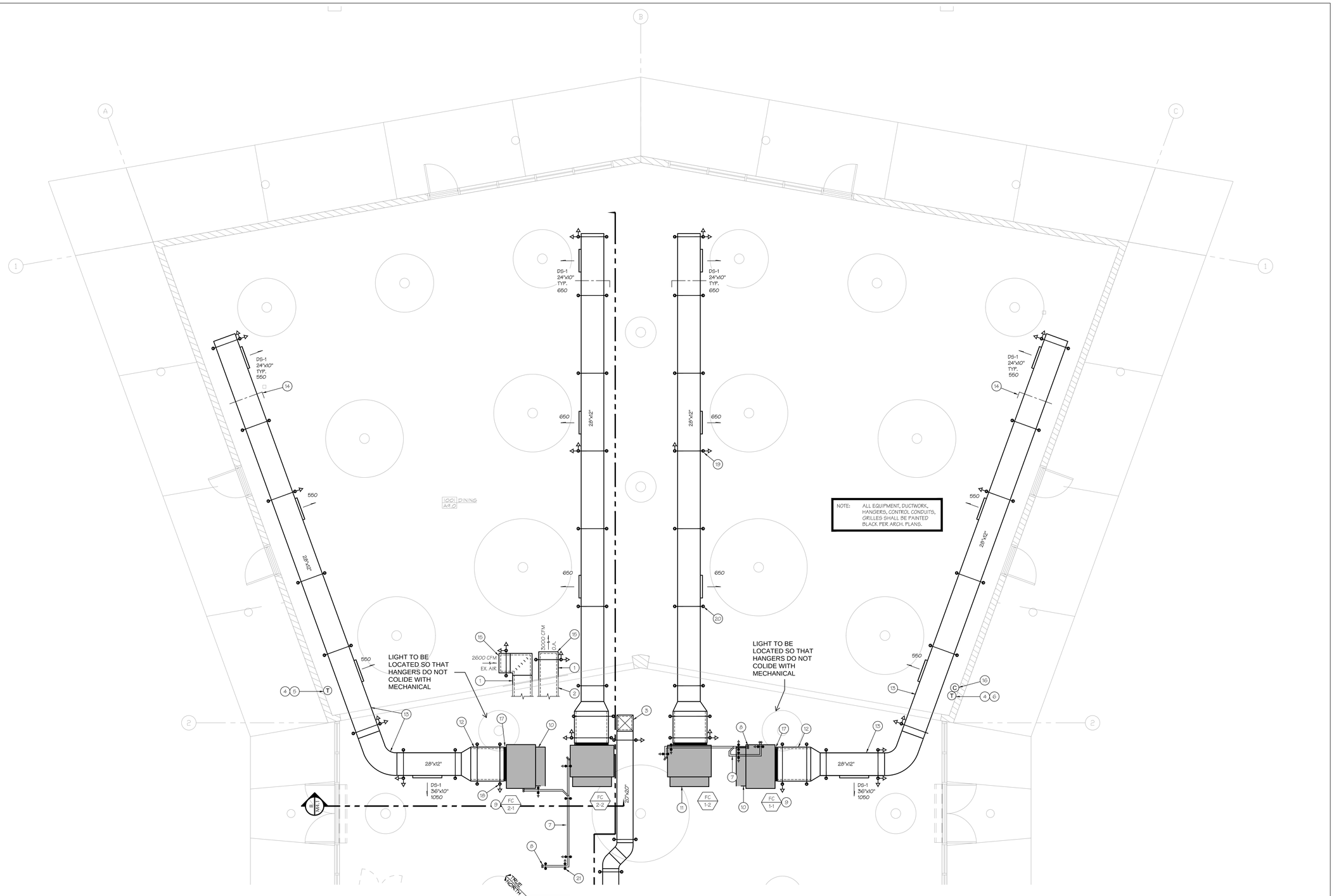

MECHANICAL FLOOR PLAN - NORTH

SCALE: 1/4"=1'-0"

MECHANICAL PLAN KEY NOTES:

1. 20" x 20" lined outside air and exhaust ducts from ERV - 1 with 2" liner, 24"x24" net.
2. See roof plan for continuation.
3. 20" x 20" make-up-air duct thru roof with 1" FSK insulation wrap.
4. Room thermostat. See detail A/M1.0.
5. This thermostat controls FC 2-1 and 2-2.
6. This thermostat controls FC 1-1 and 1-2.
7. Refrigerant piping routed between fan coils and outdoor heat pump. See piping diagram E/M1.2 for line sizes. Route as high as possible, tight to structure above.
8. Refrigerant line risers thru roof. See Structural details 11, 12, and 13/S1.2 for penetration through roof.
9. Fan coil suspended from structure above. Top of fan coil at +12'-0" above finished floor. Typical. See typical detail E/M1.1.
10. Side access filter box with 2" pleated MERV 13 filters. Typical. 11. Back opening of filter box is return air to fan coil. Typical.
12. Supply plenum with 1" acoustic liner. Typical.
13. All supply duct shall be installed with top of duct at 11' - 10" above finished floor.
14. Opposed blade volume damper at end of duct run, typical.
15. Leave end of outside air and exhaust air ducts open. Blow into open space. Provide 1/4" mesh screen over opening.
16. CO2 sensor to control ventilation rate of ERV unit. See sequence of operation.
17. Flexible connection required at connection between duct and fan-coil, typical.
18. Rectangular duct w/ transverse brace, typical. See detail A/M1.3.
19. Rectangular duct w/ transverse & longitudinal brace, typical. See detail A/M1.3.
20. Typical rectangular duct trapeze hanger. See detail A/M1.3.
21. Trapeze pipe hanger w/ transverse brace, typical. See detail E/M1.3.

SEISMIC RESTRAINT LEGEND	
	TRANSVERSE SEISMIC BRACE LOCATION
	TRANSVERSE AND LONGITUDINAL SEISMIC BRACE LOCATION
	(INDIVIDUALLY HUNG AND TRAPEZE SUPPORTED)

REGISTERED PROFESSIONAL ENGINEER MARK JAMES BASKIN No. M26571 EXP. 06-30-26 MECHANICAL STATE OF CALIFORNIA

BASKIN MECHANICAL ENGINEERS
175 Fulton Street
Fresno, CA 93721
Tel: (559) 237-0376
Job: 20141
Plt: 9/10/24

IDENTIFICATION STAMP
DIV. OF THE STATE ARCHITECT
APP: 03-122528 INC:
REVIEWED FOR
SS ☑ FLS ☑ ACS ☑
DATE: 01/06/2025

PTN : 63529-385 FILE: 15-H3

HIGHLAND HIGH SCHOOL

CAFETERIA REHABILITATION AND MODERNIZATION

2900 ROYAL SCOTS WAY
FOR
KERN HIGH SCHOOL DISTRICT
BAKERSFIELD, KERN COUNTY, CALIFORNIA

ARCHITECT S.A.I. inc.
1601 NEW STINE ROAD, SUITE 280
BAKERSFIELD, CA 93309
PH: (661) 397-4377
FAX: (661) 397-4378
WWW.SCARCHITECT.COM

LICENSED ARCHITECT STEPHEN J. CORBIN C-14736 EXP. 12/31/2025 BAKERSFIELD, CALIFORNIA

STEPHEN J. CORBIN, NCARB, AIA, LEED ®-AP

CHECK AND VERIFY ALL DIMENSIONS BEFORE PROCEEDING WITH THE WORK. REPORT DISCREPANCIES TO THE ARCHITECT. ALL CONSTRUCTION SHALL CONFORM TO THE C.B.C.

KERN HIGH SCHOOL DISTRICT
Tradition of Excellence
Est. 1893

MECHANICAL PLAN NORTH BUILDING 1000

MARK	DATE	REVISIONS
1		
2		
3		

JOB NO. 1319
DRAWN : MB
CHECKED : MB
DATE : 2/8/22

M

3.1
M OF - SHEETS

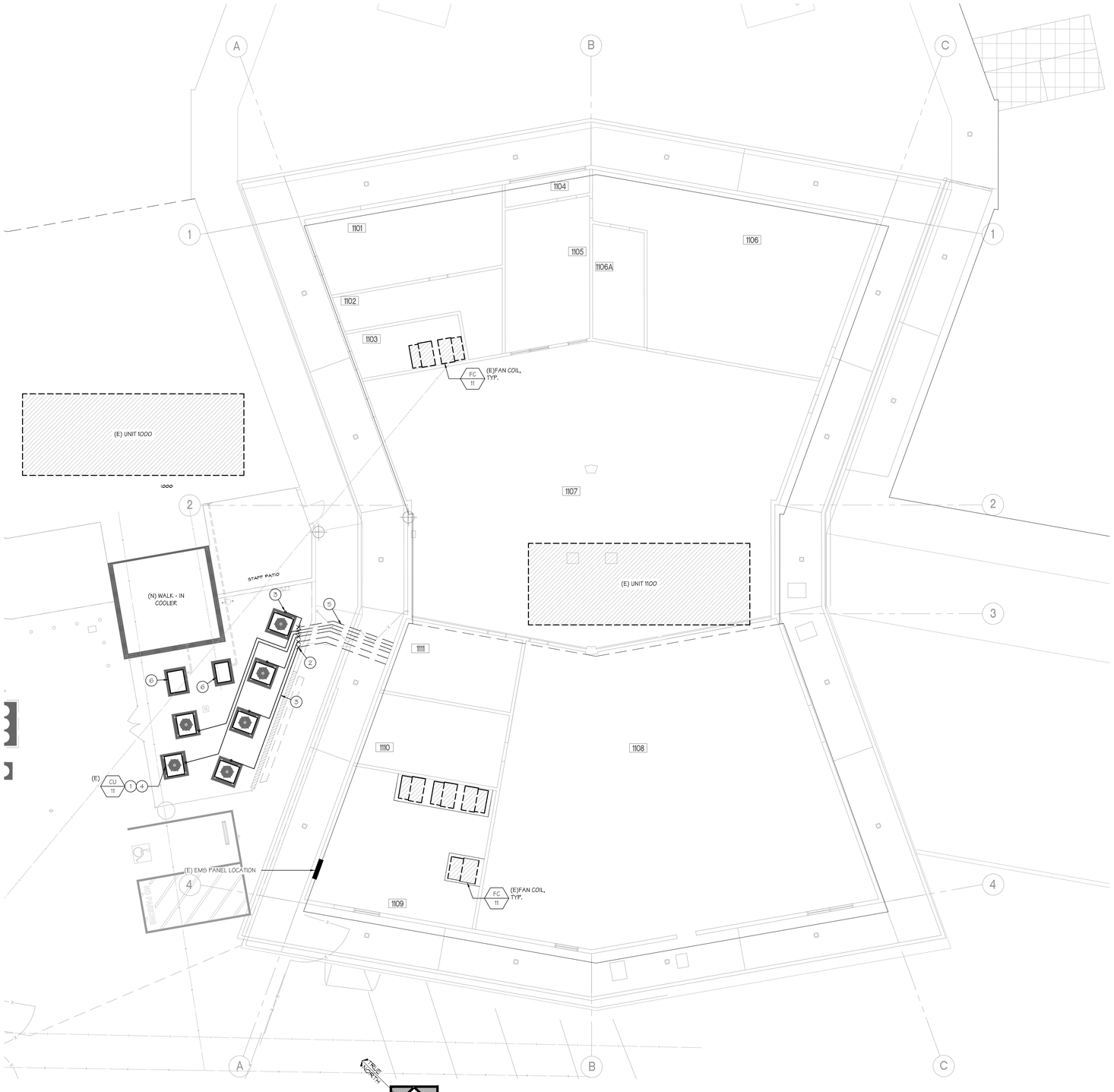

BUILDING 1100 MECHANICAL YARD PLAN

SCALE: 1/8"=1'-0"

PLAN NORTH

MECHANICAL PLAN KEY NOTES:

1. New location for existing condensing unit (CU - 11), typical. Re - install per detail G/M1.1.
2. Point of connection at existing 6" PVC sleeve and refrigerant line set below grade. Extend below grade from point of connection. Use long sweep elbows.
3. Extend pipe sleeve below grade to daylight adjacent to new condensing unit location. Rise to grade and extend refrigerant line set to condensing unit. Fill end of pipe sleeve with expandable foam insulation and cap from sunlight. Rise up a minimum of 6" from edge of new concrete pad.
4. Charge and test each R - 22 system for proper operation.
5. (E) 6"Ø PVC sleeve below grade with refrigerant piping routed inside, typ.-6.
6. Walk-in box refrigerant condensers serving Building 1000. See sheet GF400-1-A.

REGISTERED PROFESSIONAL ENGINEER
MARK JAMES BASKIN
No. M26571
EXP. 06-30-26
MECHANICAL
STATE OF CALIFORNIA

BASKIN MECHANICAL ENGINEERS
175 Fulton Street
Fresno, CA 93721
Tel: (559) 237-0376
Job: 20141
Plt: 9/10/24

IDENTIFICATION STAMP
DIV. OF THE STATE ARCHITECT
APP: 03-122528 INC:
REVIEWED FOR
SS ☑ FLS ☑ ACS ☑
DATE: 01/06/2025

PTN : 63529-385 FILE: 15-H3

HIGHLAND HIGH SCHOOL

CAFETERIA REHABILITATION AND MODERNIZATION

2900 ROYAL SCOTS WAY
FOR
KERN HIGH SCHOOL DISTRICT
BAKERSFIELD, KERN COUNTY, CALIFORNIA

ARCHITECT S.A.I. inc.
1601 NEW STINE ROAD, SUITE 280
BAKERSFIELD, CA 93309
PH: (661) 397-4377
FAX: (661) 397-4378
WWW.SCARCHITECT.COM

LICENSED ARCHITECT
STEPHEN J. CORBIN
C-16784
EXP. 12/31/2025
STATE OF CALIFORNIA

STEPHEN J. CORBIN, NCARB, AIA, LEED ®-AP

CHECK AND VERIFY ALL DIMENSIONS BEFORE PROCEEDING WITH THE WORK. REPORT DISCREPANCIES TO THE ARCHITECT. ALL CONSTRUCTION SHALL CONFORM TO THE C.B.C.

KERN HIGH SCHOOL DISTRICT
Tradition of Excellence
Est. 1893

MECHANICAL PLAN BUILDING 1100

MARK	DATE	REVISIONS
1		
2		
3		

JOB NO. 1319
DRAWN : MB
CHECKED : MB
DATE : 2/8/22

M

3.2
M OF - SHEETS

HVAC SYSTEMS SEQUENCE OF OPERATIONS

1. EMS System General Requirements:
   - a. The Carrier-Toshiba EMS Panel, BACnet gateway, and all related low voltage control wiring between these components, the Flow Selector Units, the Fan Coils, and the Room Thermostats shall be provided under specification division 23, Mechanical.
   - b. The EMS sub-contractor shall be under the division 23 contract.
   - c. EMS contractor to provide for the Energy Management System that connects to the BACnet Gateway and is responsible for controlling and monitoring other items as noted below.
   - d. The EMS contractor shall provide all graphics and programming of both the VRF and the other systems under EMS control. Include occupancy schedules, occupied & un-occupied temperature setpoints for the VRF system.
   - e. All wiring must be routed in conduit in accordance with specification division 26, Electrical.
   - f. Refer to equipment schedules and notes below schedules for additional information regarding EMS interlocks, monitoring, and controls.
   - g. Under specification Division 26, a dedicated 120v circuit will be extended to connect at the Carrier-Toshiba and the KMC Controls EMS (JACE) panel. Power required for any other device shall be provided under the EMS contractors scope. Provide power supplies and control interfaces as required.
   - h. Monitor all supply and exhaust fan status.
   - i. Monitor all AC unit & Fan coil supply temperatures.
   - j. Monitor Outside Air, Exhaust Air (entering wheel) and Supply Air (leaving wheel) temperatures for ERV.
   - k. Monitor all filter static pressure drop (except FC-3).
   - l. Provide demand responsive Zonal HVAC Controls in accordance with title 24, 110.12.The controls shall be capable of receiving a central contact or software point. The room setpoints shall be reset four degrees warmer or colder as required to reduce demand. System must be field tested to demonstrate functionality in accordance with sited energy code section.
   - m. Graphical display of all buildings, equipment, schedules, status, alarms.
   - n. Optimum start / stop of zones in accordance with 2019 Building Energy Efficiency Standards (Title 24) 120.2(k).

2. Lighting interlocks:
   - a. Interlock (2) circuits. Night lights and security lights.

3. Domestic Hot Water Circulation Pumps:
   - a. Interlock pump(s) with EMS. Operation schedule to match occupancy schedule.
   - b. Monitor pump status.

4. Roof mounted central Exhaust Fans:
   - a. Shall operate on a scheduled basis, interlocked with EMS thru relay.

5. ERV:
   - a. Shall operate on a scheduled basis, interlocked with EMS thru relay.
   - b. Provide room mounted CO2 sensor with signal to ERV to control speed of outside air and exhaust airflows (demand control ventilation).
   - c. See equipment schedule for minimum and maximum airflow rates.
   - d. Fan speed shall modulate as required to maintain 1,000 PPM max space CO2.

6. Economizers:
   - a. Economizers shall operate with a fixed dry bulb (up to five tons AC), or a differential dry bulb (over five tons).
   - b. Economizers serving units larger than four tons capacity must have Fault Diagnostic and Detection (FDD) per Title 24 120.2(ii).
   - c. Where a central EMS system is utilized, the fault detection status shall be monitored (graphical alarm) at the EMS operating workstation.
   - d. Where individual zone thermostats are utilized (no central EMS station), FDD must be displayed at the unit thermostat.
   - e. Outside air dampers shall close when unit is in the unoccupied mode.

7. Dining Area Fan Coil Units:
   - a. EMS scheduled occupancy start / stop.
   - b. EMS monitor filter status.
   - c. Manual override at room thermostats shall be initiated by user adjustment of room temperature settings. Zone fan coil shall function in override setting for 1-hour (adjustable).
   - d. Start Fan Coil one hour prior to occupancy and open outside air damper to minimum position with indoor fan operational as required to flush room of contaminants prior to occupancy. Extend Fan Coil operation beyond scheduled occupancy for one hour after scheduled occupancy to purge airborne contaminants from occupied space.
   - e. Temporary Standby Mode (applicable to Fan Coils 1, 2, 3 only):
     - i. The electrical contractor shall provide a room occupancy sensor with an auxiliary set of form C contacts for use by the EMS controls contractor. The EMS contractor shall monitor room occupancy and provide for Temporary Standby Mode as required per 2019 Building Energy Efficiency Standards (Title 24) section 120.2(e) 3. The unit shall be placed in occupant standby mode whenever the room is unoccupied for more than five minutes. The EMS contractor shall provide wiring and a powered relay to interlock at the dry contacts at the Fan Coil control terminals.
   - f. During standby mode:
     - i. Automatically shut off heating/cooling function.
     - ii. Close outside air damper.

8. Kitchen:
   - a. EMS scheduled occupancy start / stop.
   - b. Room thermostat with timed override push button control (15 minutes to 2 hour override adjustable).
   - c. Digital room temp display with individual heating and cooling setpoints, dead band, and occupant adjustable warmer - cooler adjustments + / - 2 degrees from setpoint.
   - d. Start fan one hour prior to occupancy and open outside air damper to minimum position with indoor fan operational as required to flush room of contaminants prior to occupancy. Economizer to function if available for cooling.
   - e. Staged air volume.
     - i. Fan shall stage from full airflow (100%) in full cooling or heating to 66% airflow in first stage heating or cooling, or when unit is satisfied. Indoor fan shall continue running during all occupied hours.
   - f. Outside air damper shall also stage with supply fan as required to maintain minimum prescribed airflow.
   - g. Sequence of operation for kitchen hoods and make-up-air unit are built into the Captive Aire control panel. See sheets M-5.0 thru M-5.6.

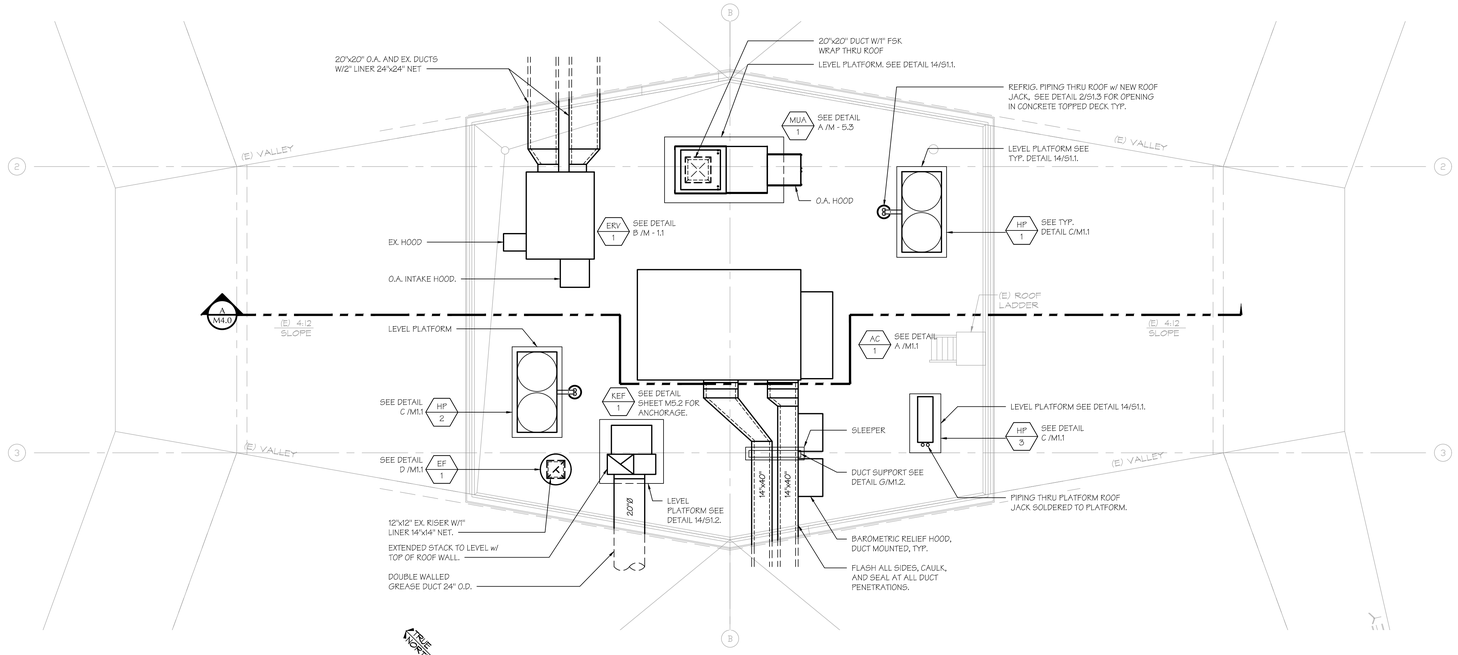

MECHANICAL ROOF PLAN - UNIT 1000

SCALE: 1/4"=1'-0"

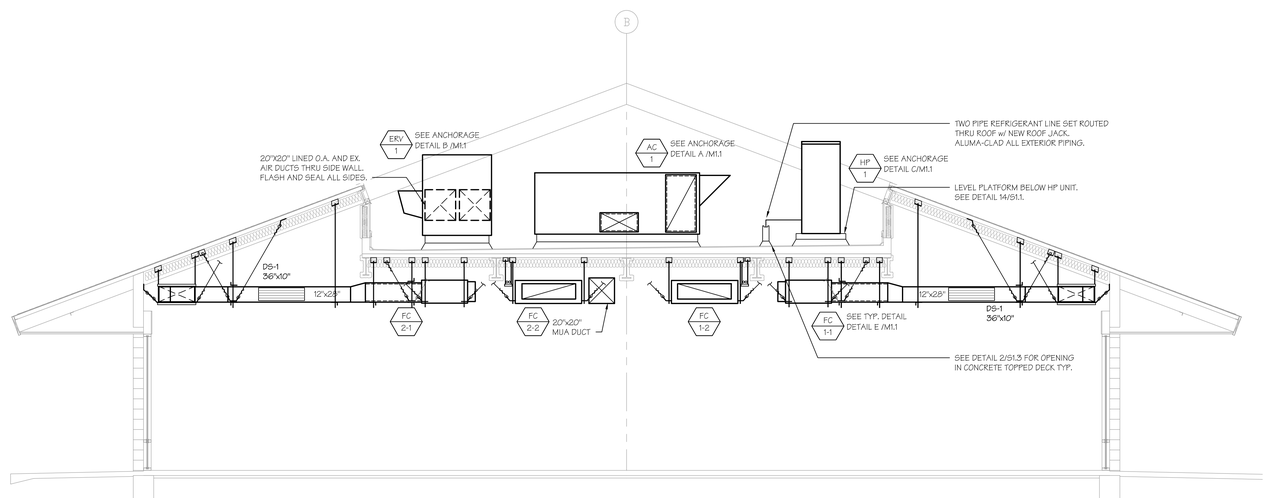

MECHANICAL SECTION

SCALE: 1/4"=1'-0"

A

BASKIN MECHANICAL ENGINEERS
175 Fulton Street
Fresno, CA 93721
Tel: (559) 237-0376
Job: 20141
Plt: 9/10/24

IDENTIFICATION STAMP
DIV. OF THE STATE ARCHITECT
APP: 03-122528 INC:
REVIEWED FOR
SS ☑ FLS ☑ ACS ☑
DATE: 01/06/2025

PTN : 63529-385 FILE: 15-H3

HIGHLAND HIGH SCHOOL

CAFETERIA REHABILITATION AND MODERNIZATION

2900 ROYAL SCOTS WAY
FOR
KERN HIGH SCHOOL DISTRICT
BAKERSFIELD, KERN COUNTY, CALIFORNIA

SCARCHITECT inc.
1601 NEW STINE ROAD, SUITE 280
BAKERSFIELD, CA 93309
PH: (661) 397-4377
FAX: (661) 397-4378
WWW.SCARCHITECT.COM
LICENSED ARCHITECT C-17678 STATE OF CALIFORNIA
STEPHEN J. CORBIN, NCARB, AIA, LEED ®-AP

CHECK AND VERIFY ALL DIMENSIONS BEFORE PROCEEDING WITH THE WORK. REPORT DISCREPANCIES TO THE ARCHITECT. ALL CONSTRUCTION SHALL CONFORM TO THE C.B.C.

KERN HIGH SCHOOL DISTRICT — Tradition of Excellence — Est. 1893

MECHANICAL ROOF PLAN AND SECTION

MARK	DATE	REVISIONS
1		
2		
3		

REGISTERED PROFESSIONAL ENGINEER — MARK JAMES BASKIN — No. M26578 — Exp. 12-31-26 — MECHANICAL — STATE OF CALIFORNIA

JOB NO.	1319
DRAWN :	MB
CHECKED :	MB
DATE :	2/8/22

M

4.0

M OF - SHEETS

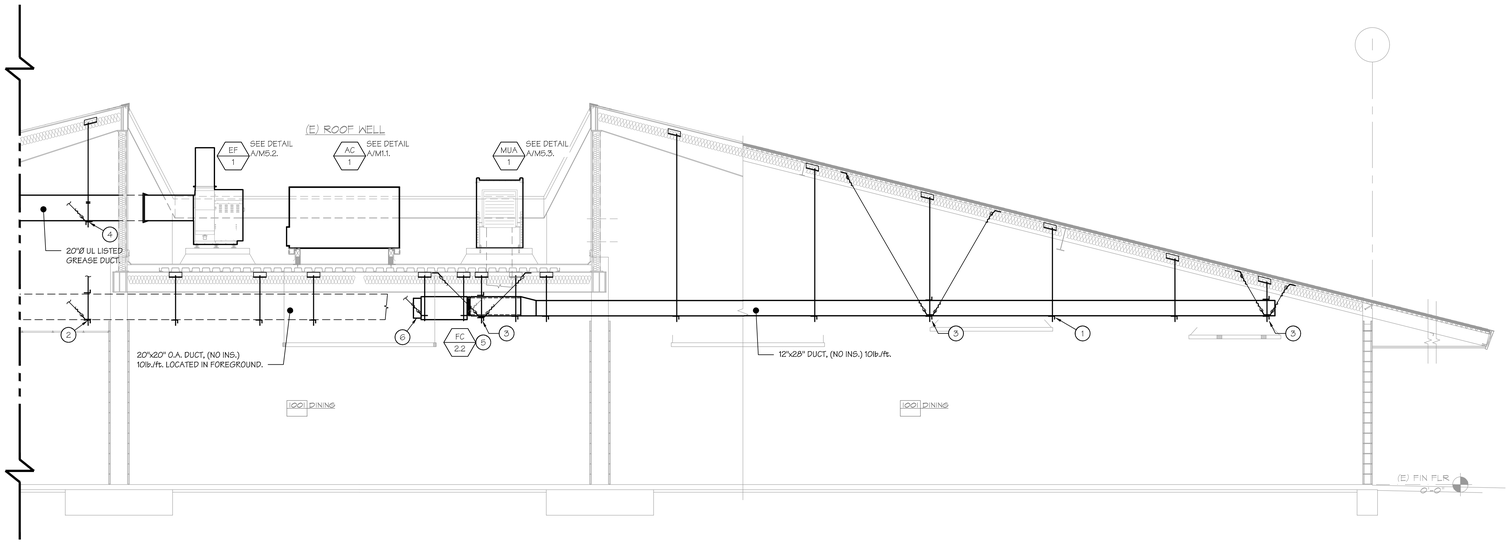

PARTIAL MECHANICAL SECTION PLAN

SCALE: 1/4"=1'-0"

A

MECHANICAL SECTION KEY NOTES: #

1. Typical rectangular duct trapeze hanger. See detail E/M1.3.
2. Rectangular duct w/ transverse brace, typical. See detail A/M1.3.
3. Rectangular duct w/ transverse & longitudinal brace, typical. See detail A/M1.3.
4. Grease duct hanger, w/ transverse brace, typical. See detail D/M1.3.
5. Fan coil suspended from structure above. Top of fan coil at +12'-0" above finished floor. Typical. See typical detail E/M1.1.
6. Side access filter box with 2" pleated MERV 13 filters. Typical.
7. Refrigerant pipe w/ hanger. See detail B/M1.3.
8. Flexible connection required at connection between duct and fan-coil, typical.

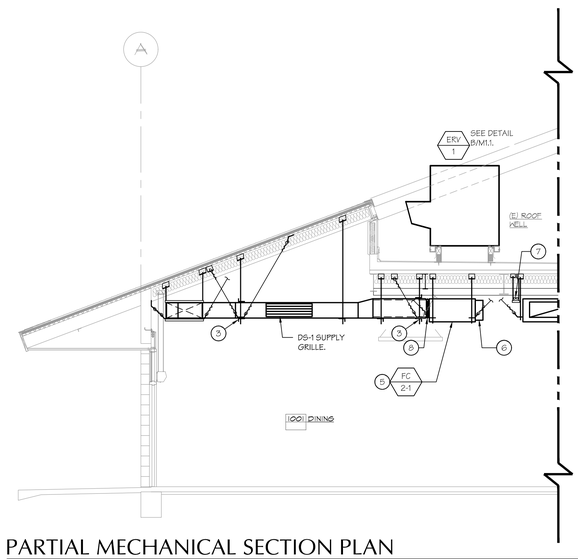

PARTIAL MECHANICAL SECTION PLAN

SCALE: 1/4"=1'-0"

B

BASKIN MECHANICAL ENGINEERS
175 Fulton Street
Fresno, CA 93721
Tel: (559) 237-0376
Job: 20141
Plt: 9/10/24

IDENTIFICATION STAMP
DIV. OF THE STATE ARCHITECT
APP: 03-122528 INC:
REVIEWED FOR
SS ☑ FLS ☑ ACS ☑
DATE: 01/06/2025

PTN : 63529-385 FILE: 15-H3

HIGHLAND HIGH SCHOOL

CAFETERIA REHABILITATION AND MODERNIZATION

2900 ROYAL SCOTS WAY
FOR
KERN HIGH SCHOOL DISTRICT
BAKERSFIELD, KERN COUNTY, CALIFORNIA

ARCHITECT SCI inc.
1601 NEW STINE ROAD, SUITE 280
BAKERSFIELD, CA 93309
PH: (661) 397-4377
FAX: (661) 397-4378
WWW.SCARCHITECT.COM
STEPHEN J. CORBIN, NCARB, AIA, LEED ®-AP

CHECK AND VERIFY ALL DIMENSIONS BEFORE PROCEEDING WITH THE WORK. REPORT DISCREPANCIES TO THE ARCHITECT. ALL CONSTRUCTION SHALL CONFORM TO THE C.B.C.

KERN HIGH SCHOOL DISTRICT
Tradition of Excellence
Est. 1893

MECHANICAL ROOF PLAN AND SECTION

MARK	DATE	REVISIONS
1		
2		
3		

JOB NO. 1319
DRAWN : MB
CHECKED : MB
DATE : 2/8/22

M

4.1
M OF - SHEETS

Captrate
Grease-Stop Solo Filter

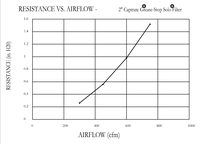

Filter Detail

CAPTRATE ®

EXHAUST CFM=LENGTH OF HOOD X CFM/LIN.FT. (LOAD)

SUPPLY CFM=EXHAUST CFM X PERCENTAGE REQUIRED

TOTAL DUCT AREA=144 X $\frac{CFM}{FPM(*)}$

DUCT LENGTH= $\frac{TOTAL\ DUCT\ AREA}{DUCT\ DEPTH}$

CALCULATIONS UTILIZED

CAPTIVE-AIRE HOODS ARE BUILT IN COMPLIANCE WITH:

- NFPA #96
- ETL SANITATION
- B.O.C.A. #93-16
- LCB.O. 34416
- SBCCI PST & ESI NO. 9313?
- E.T.L. LISTED 10290031 9PRT-00 Complies with UL710, UL2710 and UL-Q-8846 Standards.
- LOS ANGELES RR#8080

Intertek

BUILDING CODES

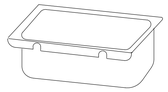

Grease cup will be supported by 2 studs on the inside wall of the hood. The grease will drain through a concealed grease trough and into this removeable cup.

1/2 Pint Grease Cup Detail

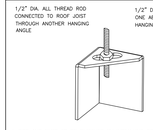

* ROD AND NUTS TO BE SUPPLIED BY INSTALLING CONTRACTOR HANGING ANGLE IS PRE-PUNCHED AT FACTORY

ND-2 HANGING ANGLE DETAIL

HANGING ANGLES WILL BE LOCATED IN THE FOLLOWING LOCATIONS FOR WALL CANOPIES

HOOD STYLE		DIM FROM REAR	DIM FROM FRONT (24" High Hood)	DIM FROM FRONT (30" High Hood)
Wall	Exhaust Only	4.166"	2.25"	2.25"
	With MUA		2.25"	2.25"
Back Shelf	Exhaust Only	4.166"	2.25"	2.25"
	With MUA		2.25"	2.25"
Condensate		2.25"	2.25"	

HANGING ANGLE LOCATIONS

HOOD INFORMATION – JOB#5315328

HOOD NO	TAG	MODEL	MANUFACTURER	LENGTH	MAX COOKING TEMP	TYPE	APPLIANCE DUTY	DESIGN CFM/FT	TOTAL EXH CFM	EXHAUST PLENUM RISER(S) WIDTH	LENG	HEIGHT	DIA	CFM	VEL	SP	TOTAL SUPPLY CFM	HOOD CONSTRUCTION	HOOD CONFIG END TO END	ROW
1	KEH-1	6024 ND-2-PSP-F	CAPTIVEAIRE	9' 3"	600 DEG	I	HEAVY	211	1950			4"	14"	1950	1824	-0.782"	1690	430 SS WHERE EXPOSED	LEFT	ALONE
2	KEH-2	6024 ND-2-PSP-F	CAPTIVEAIRE	9' 3"	600 DEG	I	HEAVY	195	1800			4"	14"	1800	1684	-0.666"	1500	430 SS WHERE EXPOSED	RIGHT	ALONE

HOOD INFORMATION

HOOD NO	TAG	FILTER(S) TYPE	QTY	HEIGHT	LENGTH	EFFICIENCY @ 7 MICRONS	LIGHT(S) QTY	TYPE	WIRE GUARD	UTILITY CABINET(S) LOCATION	SIZE	FIRE SYSTEM TYPE	SIZE	ELECTRICAL MODEL #	SWITCHES QUANTITY	FIRE SYSTEM PIPING	HOOD HANGING WEIGHT
1	KEH-1	CAPTRATE SOLO FILTER	6	20"	16"	85% SEE FILTER SPEC	3	RECESSED ROUND	NO	LEFT	12"x60"x24"	TANK FS	4.0/4.0	DCV-1111	1 LIGHT 1 FAN	YES	993 LBS
2	KEH-2	CAPTRATE SOLO FILTER	6	20"	16"	85% SEE FILTER SPEC	3	RECESSED ROUND	NO							YES	664 LBS

HOOD OPTIONS

HOOD NO	TAG	OPTION
1	KEH-1	BACKSPLASH 80.00" HIGH X 234.00" LONG 430 SS VERTICAL.
		BALANCE DAMPERS.
		INSULATION FOR TOP OF HOOD.
		INSULATION FOR BACK OF HOOD.
		LEFT VERTICAL END PANEL 27" TOP WIDTH, 21" BOTTOM WIDTH, 80" HIGH INSULATED 430 SS.
2	KEH-2	BALANCE DAMPERS.
		INSULATION FOR TOP OF HOOD.
		INSULATION FOR BACK OF HOOD.
		RIGHT VERTICAL END PANEL 27" TOP WIDTH, 21" BOTTOM WIDTH, 80" HIGH INSULATED 430 SS.

PERFORATED SUPPLY PLENUM(S)

HOOD NO	TAG	POS	LENGTH	WIDTH	HEIGHT	TYPE	RISER(S) WIDTH	LENG	DIA	CFM	SP
1	KEH-1	Front	123"	16"	6"	MUA	12"	28"		845	0.228"
						MUA	12"	28"		845	0.228"
						MUA	12"	28"		750	0.182"
2	KEH-2	Front	111"	16"	6"	MUA	12"	28"		750	0.182"

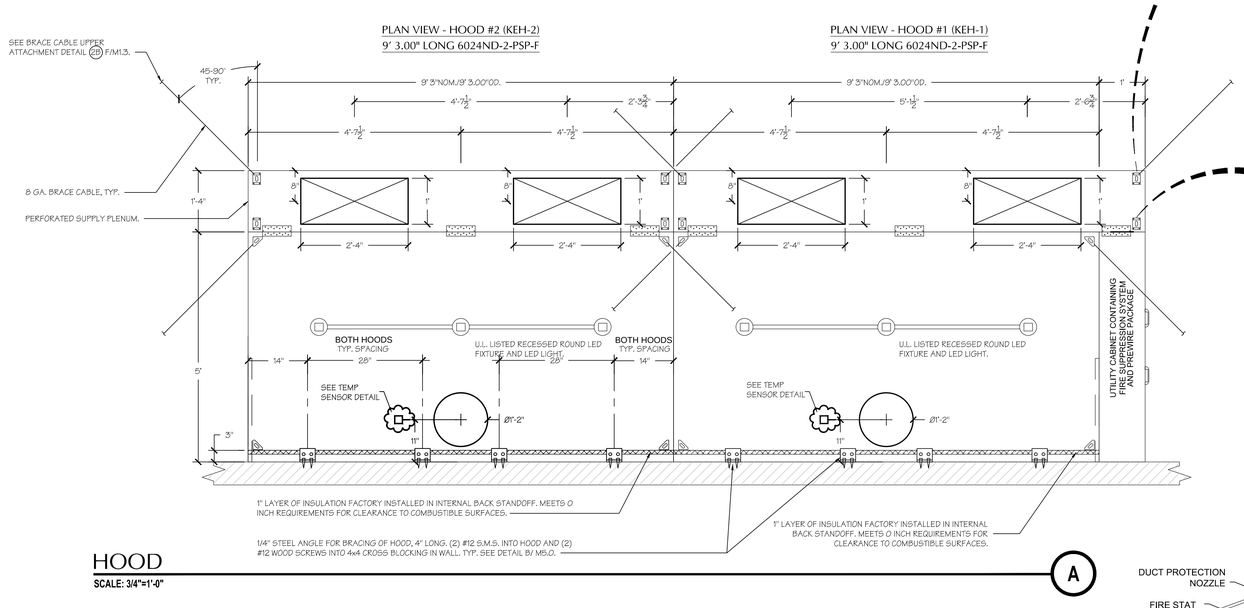

HOOD
SCALE: 3/4"=1'-0"
A

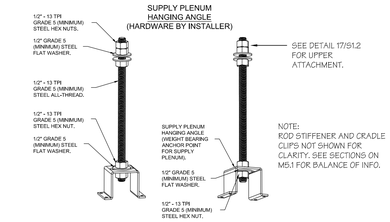

NOTE:
ROD STIFFENER AND CRADLE CLIPS NOT SHOWN FOR CLARITY. SEE SECTIONS ON M5.1 FOR BALANCE OF INFO.

ASSEMBLY INSTRUCTIONS

HANGING ANGLE MUST BE SUPPORTED WITH 1/2" - 13 TPI GRADE 5 (MINIMUM) ALL-THREAD. SANDWICH HANGING ANGLES AND CEILING ANCHOR POINTS WITH 1/2" GRADE 5 (MINIMUM) STEEL FLAT WASHERS AND 1/2" - 13 TPI GRADE 5 (MINIMUM) HEX NUTS AS SHOWN. MUST USE DOUBLED HEX NUT CONFIGURATION ABOVE CEILING ANCHORS. SINGLE HEX NUT BENEATH HANGING ANGLE IS ACCEPTABLE FOR PSP HANGING ANGLES. MAINTAIN 1/4" OF EXPOSED THREADS BENEATH BOTTOM HEX NUT. TORQUE ALL HEX NUTS TO 57 FT-LBS.

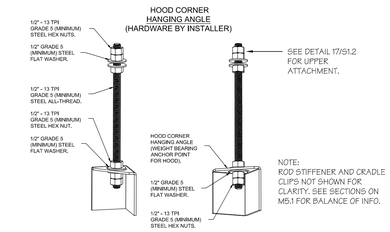

NOTE:
ROD STIFFENER AND CRADLE CLIPS NOT SHOWN FOR CLARITY. SEE SECTIONS ON M5.1 FOR BALANCE OF INFO.

ASSEMBLY INSTRUCTIONS

HANGING ANGLE MUST BE SUPPORTED WITH 1/2" - 13 TPI GRADE 5 (MINIMUM) ALL-THREAD. SANDWICH HANGING ANGLES AND CEILING ANCHOR POINTS WITH 1/2" GRADE 5 (MINIMUM) STEEL FLAT WASHERS AND 1/2" - 13 TPI GRADE 5 (MINIMUM) HEX NUTS AS SHOWN. MUST USE DOUBLED HEX NUT CONFIGURATION BENEATH HOOD HANGING ANGLES AND ABOVE CEILING ANCHORS. MAINTAIN 1/4" OF EXPOSED THREADS BENEATH BOTTOM HEX NUT. TORQUE ALL HEX NUTS TO 57 FT-LBS.

NOTE:
ROD STIFFENERS REQ'D. SEE DETAIL A&B/M5.1.

TANK/CORE MANUAL ACTIVATION DEVICE (MAD) DETAIL

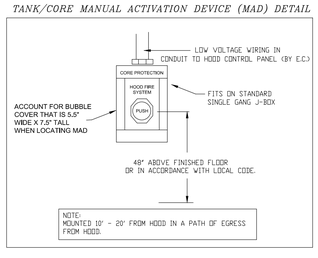

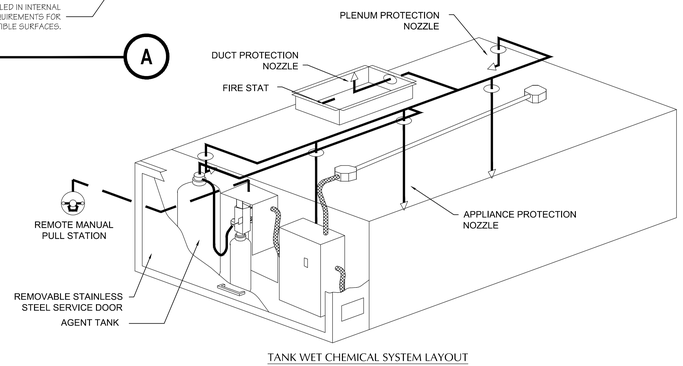

TANK WET CHEMICAL SYSTEM LAYOUT

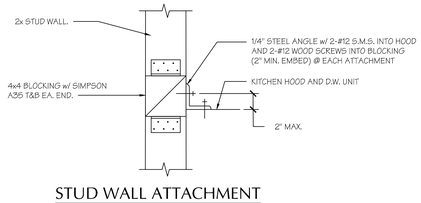

STUD WALL ATTACHMENT

HOOD ANCHOR
SCALE: N.T.S.
B

CAPTIVEAIRE
www.captiveaire.com
Oregon Office
2702 NE 114th Ave, Suite 2, Vancouver, WA, 98684 PHONE: (360) 828-5418 FAX: (919) 227-5983 EMAIL: reg90@captiveaire.com

BASKIN MECHANICAL ENGINEERS
175 Fulton Street
Fresno, CA 93721
Tel: (559) 237-0376
Job: 20141
Plt: 9/10/24

IDENTIFICATION STAMP
DIV. OF THE STATE ARCHITECT
APP: 03-122528 INC:
REVIEWED FOR
SS ☑ FLS ☑ ACS ☑
DATE: 01/06/2025

PTN : 63529-385 FILE: 15-H3

HIGHLAND HIGH SCHOOL
CAFETERIA REHABILITATION AND MODERNIZATION
2900 ROYAL SCOTS WAY
FOR
KERN HIGH SCHOOL DISTRICT
BAKERSFIELD, KERN COUNTY, CALIFORNIA

1601 NEW STINE ROAD, SUITE 280
BAKERSFIELD, CA 93309
PH: (661) 397-4377
FAX: (661) 397-4378
WWW.SCARCHITECT.COM
STEPHEN J. CORBIN, NCARB, AIA, LEED ®-AP

CHECK AND VERIFY ALL DIMENSIONS BEFORE PROCEEDING WITH THE WORK. REPORT DISCREPANCIES TO THE ARCHITECT. ALL CONSTRUCTION SHALL CONFORM TO THE C.B.C.

KITCHEN EX. HOOD SCHEDULE

MARK	DATE	REVISIONS
1		
2		
3		

JOB NO. 1319
DRAWN : MB
CHECKED : MB
DATE : 2/8/22

M

5.0
M OF - SHEETS

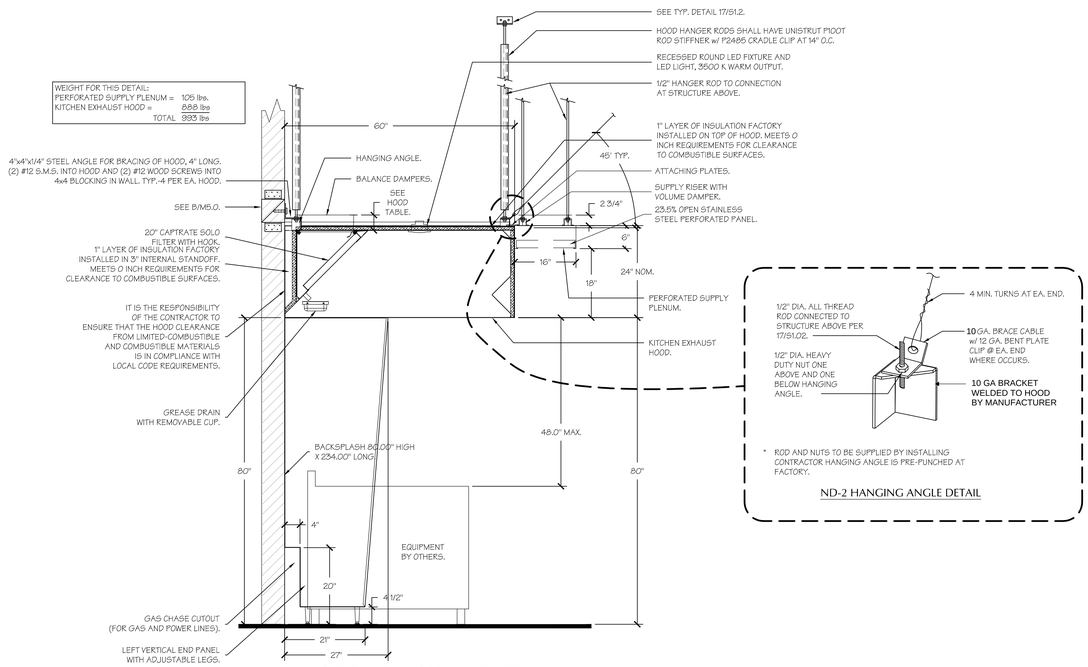

ND-2 HANGING ANGLE DETAIL

SECTION VIEW - MODEL 6024ND-2-PSP-F
HOOD - #1 (KEH-1)

KEH-1 ANCHORAGE (A)

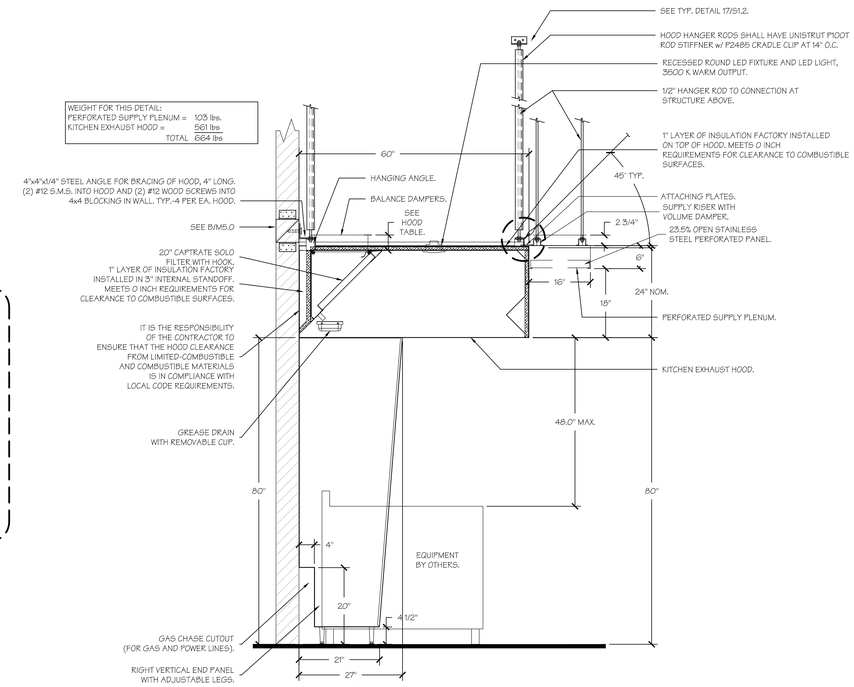

SECTION VIEW - MODEL 6024ND-2-PSP-F
HOOD - #2 (KEH-2)

KEH-2 ANCHORAGE (B)

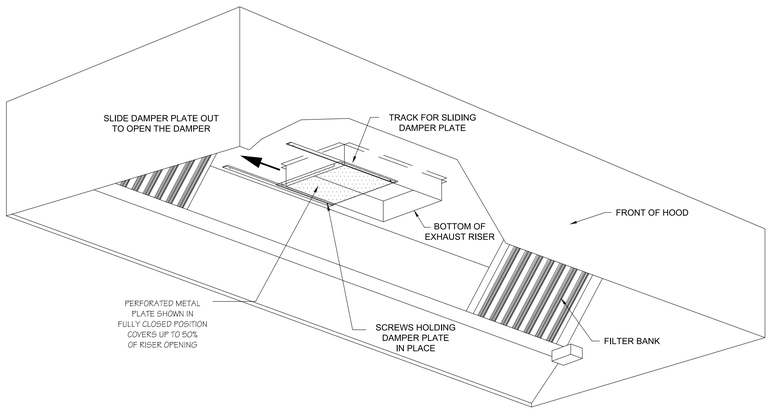

BALANCING DAMPER DETAIL

IDENTIFICATION STAMP
DIV. OF THE STATE ARCHITECT
APP: 03-122528 INC:
REVIEWED FOR
SS ☑ FLS ☑ ACS ☑
DATE: 01/06/2025

PTN : 63529-385 FILE: 15-H3

HIGHLAND HIGH SCHOOL
CAFETERIA REHABILITATION AND MODERNIZATION
2900 ROYAL SCOTS WAY
FOR
KERN HIGH SCHOOL DISTRICT
BAKERSFIELD, KERN COUNTY, CALIFORNIA

SCARCHITECT inc.
1601 NEW STINE ROAD, SUITE 280
BAKERSFIELD, CA 93309
PH: (661) 397-4377
FAX: (661) 397-4378
WWW.SCARCHITECT.COM
STEPHEN J. CORBIN, NCARB, AIA, LEED ®-AP

CHECK AND VERIFY ALL DIMENSIONS BEFORE PROCEEDING WITH THE WORK. REPORT DISCREPANCIES TO THE ARCHITECT. ALL CONSTRUCTION SHALL CONFORM TO THE C.B.C.

KITCHEN HOOD DETAILS

MARK	DATE	REVISIONS
1		
2		
3		

JOB NO. 1319
DRAWN : MB
CHECKED : MB
DATE : 2/8/22

M

5.1
M OF - SHEETS

CAPTIVEAIRE
www.captiveaire.com
Oregon Office
2702 NE 114th Ave, Suite 2, Vancouver, WA, 98684 PHONE: (360) 828-5418 FAX: (919) 227-5983 EMAIL: reg90@captiveaire.com

BASKIN MECHANICAL ENGINEERS
175 Fulton Street
Fresno, CA 93721
Tel: (559) 237-0376
Job: 20141
Plt: 9/10/24

EXHAUST FAN INFORMATION – JOB#5315328

FAN UNIT NO	TAG	QTY	FAN UNIT MODEL #	MANUFACTURER	CFM	ESP	RPM	MOTOR ENCL	HP	BHP	PHASE	VOLT	FLA	DISCHARGE VELOCITY	WEIGHT (LBS)	SONES
1	KEF-1	1	USBI20DD-RM	CAPTIVEAIRE	3750	1.500	1303	ODP,PREMIUM	3.000	1.8370	3	460	4.3	1634 FPM	443	26

FAN OPTIONS

FAN UNIT NO	TAG	QTY	DESCRIPTION
1	KEF-1	1	UTILITY SET GREASE CUP
		1	BI20 - 24" DISCHARGE EXTENSION
		1	BI - DISCHARGE ORIENTATION VERTICAL UPPER LEFT - CW INLET SIDE
		1	BI20 - INLET CONNECTION STANDARD 20" FLANGED GREASE DUCT
		1	UTILITY SET - SPRING VIBRATION ISOLATORS - BI20 / EQUIVALENT SIZED UTILITY SET - INDOOR/OUTDOOR USE
		1	LOAD REACTOR MOUNTED IN FAN
		1	LINE REACTOR MOUNTING BRACKET FOR DIRECT DRIVE FANS (UP TO 25 HP)
		1	2 YEAR PARTS WARRANTY
2	MAU-1	1	EVAPORATIVE COOLER WIRING HARNESS
		1	SEPARATE 120V WIRING PACKAGE (REQUIRED AND USED ONLY FOR DCV OR PREWIRE WITH VFD) - THREE PHASE ONLY
		1	MOTORIZED BACKDRAFT DAMPER FOR SIZE 2 HOUSING - MEETS AMCA CLASS 1A RATING
		1	FREEZE PROTECTION DRAIN KIT FOR EVAPORATIVE COOLERS
		1	LOAD REACTOR MOUNTED IN FAN
		1	2 YEAR PARTS WARRANTY

CURB ASSEMBLIES

NO	ON FAN	TAG	WEIGHT	ITEM	SIZE
2	# 2	MAU-1	52 LBS	CURB	31.000"W X 31.000"L X 20.000"H ALONG LENGTH, RIGHT.

FAN #1 USBI20DD-RM - EXHAUST FAN (KEF-1)

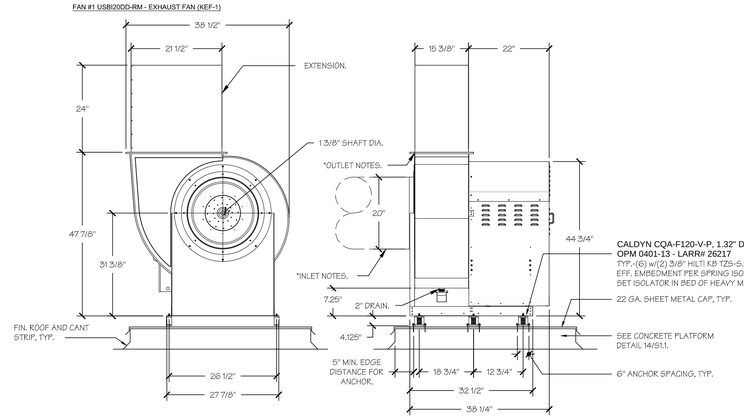

SIDE VIEW (6) ISOLATORS = USBI18 THRU 36. FRONT VIEW

FEATURES:

- ROOF MOUNTED FANS.
- UL705.
- UL762 AND ULC-S645 (RESTAURANT MODEL).
- HIGH HEAT OPERATION DIRECT DRIVE 350°F (176°C).
- HEAT SLINGER.
- NEMA 3R SAFETY DISCONNECT SWITCH.
- GREASE CLASSIFICATION TESTING.
- 2" DRAIN.
- MOTOR WEATHER COVER.
- FULLY SEALED SCROLL HOUSING.
- SCROLL ACCESS DOOR.
- FLANGE 1 1/4".

OPTIONS

UTILITY SET GREASE CUP.
BI20 - 24" DISCHARGE EXTENSION.
BI - DISCHARGE ORIENTATION VERTICAL UPPER LEFT - CW INLET SIDE.
BI20 - INLET CONNECTION STANDARD 20" FLANGED GREASE DUCT.
UTILITY SET - SPRING VIBRATION ISOLATORS - BI20 / EQUIVALENT SIZED UTILITY SET - INDOOR/OUTDOOR USE.
LOAD REACTOR MOUNTED IN FAN.
LINE REACTOR MOUNTING BRACKET FOR DIRECT DRIVE FANS (UP TO 25 HP).
2 YEAR PARTS WARRANTY.

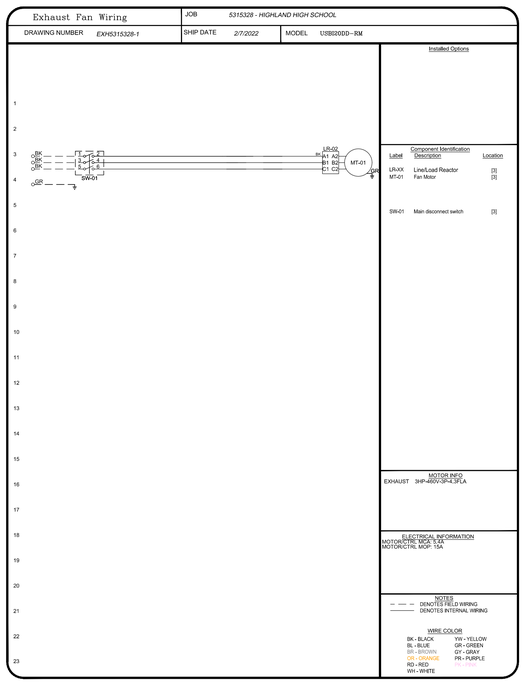

IDENTIFICATION STAMP
DIV. OF THE STATE ARCHITECT
APP: 03-122528 INC:
REVIEWED FOR
SS ☑ FLS ☑ ACS ☑
DATE: 01/06/2025

PTN : 63529-385 FILE: 15-H3

HIGHLAND HIGH SCHOOL
CAFETERIA REHABILITATION AND MODERNIZATION
2900 ROYAL SCOTS WAY
FOR
KERN HIGH SCHOOL DISTRICT
BAKERSFIELD, KERN COUNTY, CALIFORNIA

1601 NEW STINE ROAD, SUITE 280
BAKERSFIELD, CA 93309
PH: (661) 397-4377
FAX: (661) 397-4378
WWW.SCARCHITECT.COM

STEPHEN J. CORBIN, NCARB, AIA, LEED ®-AP

CHECK AND VERIFY ALL DIMENSIONS BEFORE PROCEEDING WITH THE WORK. REPORT DISCREPANCIES TO THE ARCHITECT. ALL CONSTRUCTION SHALL CONFORM TO THE C.B.C.

KITCHEN EX. FAN AND WIRING

MARK	DATE	REVISIONS
1		
2		
3		

JOB NO. 1319
DRAWN : MB
CHECKED : MB
DATE : 2/8/22

5.2
M OF - SHEETS

CAPTIVEAIRE
www.captiveaire.com
Oregon Office
2702 NE 114th Ave, Suite 2, Vancouver, WA, 98684 PHONE: (360) 828-5418 FAX: (919) 227-5983 EMAIL: reg90@captiveaire.com

BAKER MECHANICAL ENGINEERS
175 Fulton Street
Fresno, CA 93721
Tel: (559) 237-0376
Job: 20141
Plt: 9/10/24

FAN #2 A2-20D - SUPPLY FAN (MAU-1)

1. UNTEMPERED SUPPLY UNIT WITH 20" MIXED FLOW DIRECT DRIVE FAN IN SIZE #2 HOUSING.
2. EVAP COOLER (CELDEK) W/INTAKE HOOD W/EZ FILTERS-LOW CFM.
3. DOWN DISCHARGE - AIR FLOW RIGHT -> LEFT.
4. 120V WIRING CONNECTION TO ENERGIZE EVAPORATIVE COOLERS FROM UNTEMPERED SUPPLY FANS.
5. SEPARATE 120VAC WIRING PACKAGE FOR MAKE-UP AIR UNITS. OPTION MUST BE SELECTED WHEN MOUNTING VFD IN PREWIRE PANEL OR WITH DCV PACKAGE. PROVIDES SEPARATE 120VAC INPUT TO SUPPLY FAN. THIS 120V SIGNAL MUST BE RUN BY ELECTRICIAN FROM DCV TO MUA SWITCH.
6. MOTORIZED BACK DRAFT DAMPER 22.75" X 24" FOR SIZE 2 UNTEMPERED UNITS W/EXTENDED SHAFT, STANDARD GALVANIZED CONSTRUCTION, 3/4" REAR FLANGE, LOW LEAKAGE, LF1205 ACTUATOR INCLUDED.
7. FREEZE PROTECTION DRAIN CONTROL KIT FOR EVAPORATIVE COOLERS. INCLUDES 3-WAY WATER SOLENOID VALVE 8316G064 (SHIPPED LOOSE), PRESSURE SWITCH INSTALLED UPSTREAM OF 2WAY SOLENOID IN UNIT, BRASS TEE, 2 NPT HALF INCH NIPPLES, AND TWO STAGE THERMOSTAT T678A1361. FIELD WIRING REQUIRED BY OTHERS FOR 3-WAY VALVE. FOR BOTH CELDEK AND STANDARD V-BANK TYPE CONFIGURATIONS.
8. MOUNT LOAD REACTOR IN FAN.
9. HINGED DOUBLE WALL INSULATED DOOR ASSEMBLY (BURNER/BLOWER/EVAP SECTION).
10. 2 YEAR PARTS WARRANTY

*NOTE: SUPPLY DUCT MUST BE INSTALLED TO MEET SMACNA STANDARDS. A MINIMUM STRAIGHT DUCT LENGTH MUST BE MAINTAINED DOWNSTREAM OF UNIT DISCHARGE AS OUTLINED IN AMCA PUBLICATION 201. WHEN USING RECTANGULAR DUCTWORK, ELBOWS MUST BE RADIUS THROAT, RADIUS BACK WITH TURNING VANES. FLEXIBLE DUCTWORK AND SQUARE THROAT/SQUARE BACK ELBOWS SHOULD NOT BE USED. ANY TRANSITION AND/OR TURNS IN THE DUCTWORK WILL CAUSE SYSTEM EFFECT. SYSTEM EFFECT WILL DRASTICALLY INCREASE STATIC PRESSURE AND REDUCE AIRFLOW. DO NOT RELY ON UNIT TO SUPPORT DUCT IN ANY WAY. FAILURE TO PROPERLY SIZE DUCTWORK MAY CAUSE SYSTEM EFFECTS AND REDUCE PERFORMANCE OF THE EQUIPMENT. SUGGESTED STRAIGHT DUCT SIZE IS 20" x 20".

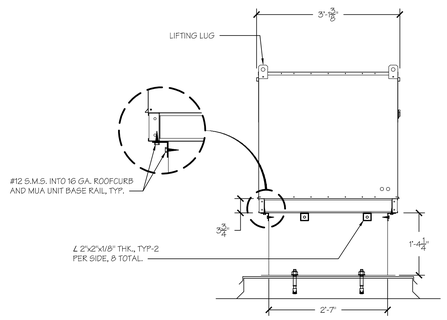

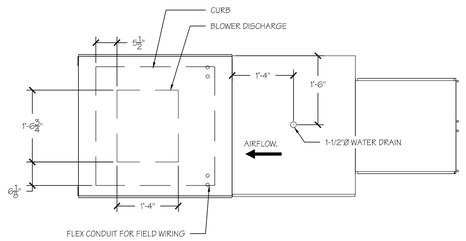

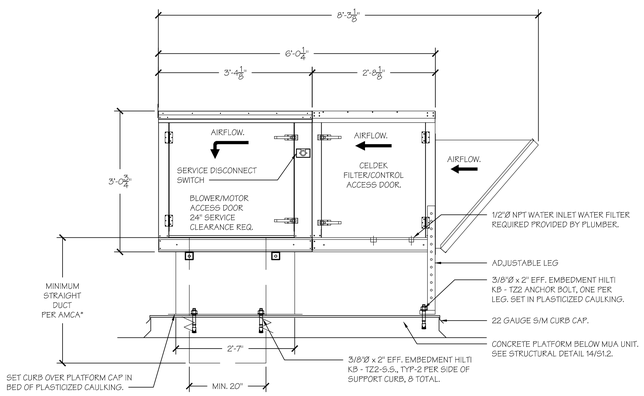

MAKE - UP AIR UNIT ANCHORAGE

NO SCALE

A

MUA FAN INFORMATION – JOB#5315328

FAN UNIT NO	TAG	QTY	FAN UNIT MODEL #	BLOWER	HOUSING	MIN CFM	DESIGN CFM	ESP	RPM	MOTOR ENCL	HP	BHP	PHASE	VOLT	FLA	MCA	MOCP	EVAP FLOW RATE (Gal/Hr)	EVAP COOLER ENTERING DB TEMP	EVAP COOLER ENTERING WB TEMP	EVAP COOLER LEAVING DB TEMP	EVAP COOLER LEAVING WB TEMP	WEIGHT (LBS)	SONES
2	MAU-1	1	A2-20D	20MF-2-MOD	A2	1500	3190	0.500	1371	ODP,PREMIUM	2.000	1.3560	3	460	3.8	4.8A	15A	4.76	101.0°F	70.0°F	81.0°F	70.0°F	632	16.4

AirHandler Wiring

DRAWING NUMBER	A5315328-2	SHIP DATE 2/7/2022	MODEL A2-20D

JOB 5315328 - HIGHLAND HIGH SCHOOL

ATTENTION ELECTRICIAN!
DROP FOR DISCONNECT CONNECTION IS FACTORY SUPPLIED
CONNECT POWER TO THE DROP

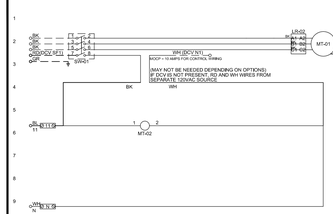

Installed Options
Motorized Back Draft Damper
Cooling Intertock
DCV/VFD Wiring

Component Identification

Label	Description	Location
LR-XX	Line/Load Reactor	[3] [5] [6]
MT-01	Supply motor	
MT-02	Damper motor	
SW-01	Main disconnect switch	[2]

MOTOR INFO
SUPPLY 2HP-460V/3Ph/3Ph/FLA

ELECTRICAL INFORMATION
MOTOR CIRCUIT MCA: 4.8A
CONTROL CIRCUIT MCA: 1.1A
MOTOR CIRCUIT MOP: 15A
CONTROL CIRCUIT MOP: 15A

NOTES
DENOTES FIELD WIRING
DENOTES INTERNAL WIRING

WIRE COLORS
BK - BLACK YW - YELLOW
BL - BLUE GR - GREEN
BR - BROWN OY - GRAY
OR - ORANGE PR - PURPLE
RD - RED
WH - WHITE

Evaporative Cooler Wiring

DRAWING NUMBER	EC5315328-2	SHIP DATE 2/7/2022	MODEL A2-20D

JOB 5315328 - HIGHLAND HIGH SCHOOL

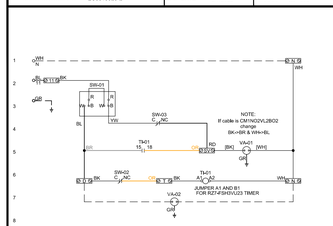

Installed Options

Component Identification

Label	Description	Location
SW-01	Thermostat	[2]
SW-02	Overflow Switch	[6]
SW-03	Freeze Stat Switch	[6]
TM-01	Spray Timer	[5+7]
VA-01	Internal Solenoid Valve	[5]
VA-02	3-Way Solenoid Valve	[7]

POINT-TO-POINT SUMMARY OF DRAIN CONNECTION

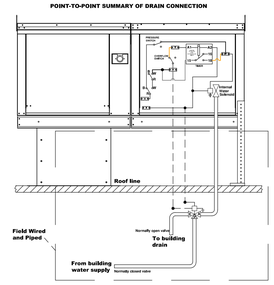

NOTES
DENOTES FIELD WIRING
DENOTES INTERNAL WIRING

WIRE COLORS
BK - BLACK YW - YELLOW
BL - BLUE GR - GREEN
BR - BROWN OY - GRAY
OR - ORANGE PR - PURPLE
RD - RED
WH - WHITE

CAPTIVEAIRE
www.captiveaire.com
Oregon Office
2702 NE 114th Ave, Suite 2, Vancouver, WA, 98684 PHONE: (360) 828-5418 FAX: (919) 227-5983 EMAIL: reg90@captiveaire.com

REGISTERED PROFESSIONAL ENGINEER
JAMES "BRADLEY" BASKIN
No. M26571
Exp. 06-30-26
MECHANICAL
STATE OF CALIFORNIA

BME BASKIN MECHANICAL ENGINEERS
175 Fulton Street
Fresno, CA 93721
Tel: (559) 237-0376
Job: 20141
Plt: 9/10/24

IDENTIFICATION STAMP
DIV. OF THE STATE ARCHITECT
APP: 03-122528 INC:
REVIEWED FOR
SS ☑ FLS ☑ ACS ☑
DATE: 01/06/2025

PTN : 63529-385 FILE: 15-H3

HIGHLAND HIGH SCHOOL
CAFETERIA REHABILITATION AND MODERNIZATION
2900 ROYAL SCOTS WAY
FOR
KERN HIGH SCHOOL DISTRICT
BAKERSFIELD, KERN COUNTY, CALIFORNIA

ARCHITECT SJC inc.
1601 NEW STINE ROAD, SUITE 280
BAKERSFIELD, CA 93309
PH: (661) 397-4377
FAX: 397-4378
WWW.SCARCHITECT.COM
LICENSED ARCHITECT STEPHEN J. CORBIN No. C-16785 STATE OF CALIFORNIA
STEPHEN J. CORBIN, NCARB, AIA, LEED ®-AP

CHECK AND VERIFY ALL DIMENSIONS BEFORE PROCEEDING WITH THE WORK. REPORT DISCREPANCIES TO THE ARCHITECT. ALL CONSTRUCTION SHALL CONFORM TO THE C.B.C.

KERN HIGH SCHOOL DISTRICT
Tradition of Excellence
Est. 1893

KITCHEN
MAKE-UP-AIR
UNIT

MARK	DATE	REVISIONS
1		
2		
3		

JOB NO. 1319
DRAWN : MB
CHECKED : MB
DATE : 2/8/22

M

5.3
M OF - SHEETS

JOB NO	MODEL NUMBER	DRAWN BY	SCHEMATIC TYPE	DESCRIPTION OF OPERATION:
5315328	DCV-1111		INSTALL	Fire System #1 TANK FS - 4.0+/L Tank-based Fire Protection System equipped with Electronic Detection utilizing CORE board as a Listed Release Mechanism. Installed in Hood Utility Cabinet with integral hood prewire panel.
	JOB NAME: HIGHLAND HIGH SCHOOL	DATE: 2/7/2022	DWG NO: ECP #1-3	

TANK PROTECTION ELECTRICAL DETAIL

02/10/2021 Rev. 2

FS-1: MASTER

ELECTRICIAN
1. WIRE MAIN CONTROL PANEL PER INCLUDED SCHEMATIC
2. WIRE ALL FANS PER INCLUDED SCHEMATIC
3. WIRE SHUNT TRIP BREAKER (OPTIONAL)
4. WIRE UDS APPLIANCE KILL SWITCH, IF EQUIPPED (OPTIONAL)
5. WIRE GAS VALVE

ELECTRICAL CONTRACTOR REQUIREMENT

ITEM	CONNECTION IN PANEL	CONNECTION IN DEVICE	VOLTAGE	AMPERAGE	COMMENTS
SHUNT TRIP BREAKER (OPTIONAL)	ST & N1	BREAKER COIL (A1 & A2)	120 VAC	< 4 AMPS	ST TO A1 ON SHUNT BREAKER COIL, AND NEUTRAL TO A2 ON SHUNT TRIP BREAKER COIL
CONTROL PANEL POWER	H1 & N1 + GROUND	CIRCUIT BREAKER	120 VAC	15 AMPS	CONTROL PANEL POWER MUST NOT BE RUN THROUGH SHUNT TRIP BREAKER
UDS APPLIANCE KILL SWITCH (OPTIONAL)	KTS & N1	KTS & N1	120 VAC	< 4 AMPS	KILL SWITCH TERMINALS MUST BE IN SERIES WITH OTHER KILL SWITCHES
REMOTE 120VAC ANSUL AUTOMAN (OPTIONAL)	AU1, AU2	SOLENOID	120 VAC	< 6 AMPS	120V TO AU1, AU2 TO ANSUL ELECTRIC AUTOMAN, ANSUL SOLENOID TO NEUTRAL
GAS VALVE	LGV & N3 (IF 24 VDC) GAS & N1 (IF 120 VAC)	RED/RED/GREEN	24 VDC OR 120 VAC	< 10 AMPS	IF 24 VDC - 2 WIRES & GROUND, N3 TO RED, LGV TO RED, AND GREEN TO GROUND IF 120 VAC - 2 WIRES & GROUND GAS TO RED, N1 TO RED, AND GREEN TO GROUND

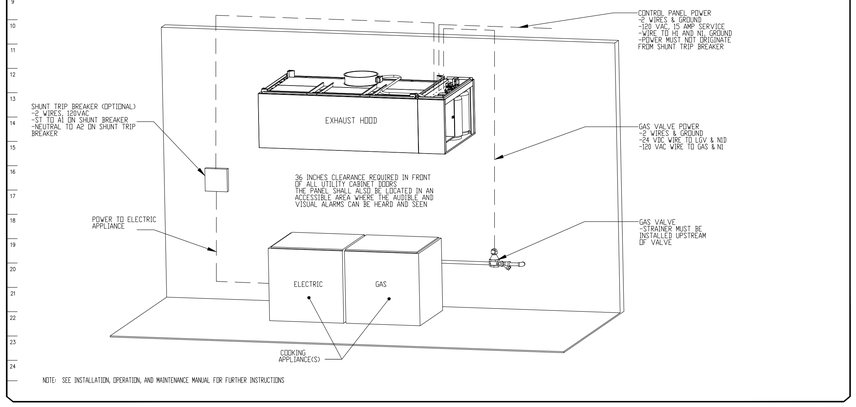

NOTE: SEE INSTALLATION, OPERATION, AND MAINTENANCE MANUAL FOR FURTHER INSTRUCTIONS

JOB NO	MODEL NUMBER	DRAWN BY	SCHEMATIC TYPE	DESCRIPTION OF OPERATION:
5315328	DCV-1111		INSTALL	Fire System #1 TANK FS - 4.0+/L Tank-based Fire Protection System equipped with Electronic Detection utilizing CORE board as a Listed Release Mechanism. Installed in Hood Utility Cabinet with integral hood prewire panel.
	JOB NAME: HIGHLAND HIGH SCHOOL	DATE: 2/7/2022	DWG NO: ECP #1-4	

TANK PROTECTION LOW-VOLTAGE DETAIL

02/10/2021 Rev. 2

FS-1: MASTER

ALARM CONTRACTOR:
1. WIRE MANUAL ACTUATION DEVICE(S), REMOTE FIRESTAT(S), CORE INTERLOCK(S), FIRE SENSOR(S) AND FIRE ALARM CONTACTS
2. COMPLETE FINAL HEOKUP OF SYSTEM
3. VERIFY FINAL FIRE SYSTEM TEST

ALARM CONTRACTOR REQUIREMENT

ITEM	CONNECTION IN PANEL	CONNECTION ON DEVICE	VOLTAGE	AMPERAGE	COMMENTS
MANUAL ACTUATION DEVICE(S)	101 AND 104 102 AND 103	1 & 2	24 VDC	< 10 AMPS	WIRE MANUAL ACTUATION DEVICE TERMINAL 1 BETWEEN CORE PANEL TERMINALS 102 AND 103 WIRE MANUAL ACTUATION DEVICE TERMINAL 2 BETWEEN CORE PANEL TERMINALS 101 AND 104 JUMPER 101 TO 104 AND 102 TO 103 IF NO MANUAL ACTUATION DEVICE IS INSTALLED
MANUAL ACTUATION DEVICE COVER	N/A	N/A	N/A	N/A	MANUAL ACTUATION DEVICE COVER MUST BE INSTALLED IF SURFACE MOUNTED, USE COVER EXTENSION STI-6531B
REMOTE FIRESTAT SENSOR(S)	21 AND 24 22 AND 23	BLACK AND WHITE	24 VDC	< 10 AMPS	WIRE FIRE SENSOR WHITE WIRES BETWEEN HOOD CORE PANEL TERMINALS 22 AND 23 WIRE FIRE SENSOR BLACK WIRE BETWEEN HOOD CORE PANEL TERMINALS 21 AND 24 HIGH TEMP (842°F) #CW04427 (WHT) & #CW04427B (BLK)WIRE OR SIMILAR ONLY IF RAN OVER TOP OF HOOD, OTHERWISE BELDEN #6320UL OR SIMILAR PLENUM RATED WIRE. SEE FIGURE 1
FIRE ALARM CONTACT	AL1, AL2	VARIES	50V MAX (AC/DC)	UP TO 1 AMP	FIRE ALARM RELAY CONTACTS FOR BUILDING FIRE ALARM LOCATED IN THE CORE ELECTRICAL CONTROL PANEL
CORE INTERLOCK(S)	ILA, ILB, ILC	ILA, ILB, ILC	RS-485 COMMUNICATIONS SIGNAL		CORE SYSTEM (1) ILA, TO CORE SYSTEM (2) ILA CORE SYSTEM (1) ILB, TO CORE SYSTEM (2) ILB CORE SYSTEM (1) ILC, TO CORE SYSTEM (2) ILC. USE BELDEN# 88760 OR SIMILAR WIRE
TROUBLE CONTACT	TBC, TBL, TOK	VARIES	MAX 120 VAC	UP TO 6 AMPS	WIRE TO TBL & TBC NORMALLY OPEN CONTACT, CLOSES IN TROUBLE CONDITION
CORE COMMUNICATIONS CABLE	RJ-45 Jack	INTERNET CONNECTION	SIGNAL	<1.0 AMPS	TYPICAL CONNECTION CAT5 CABLE TO LOCAL AREA NETWORK VIA ETHERNET SWITCH OR WIRELESS ROUTER WITH VALID INTERNET CONNECTION

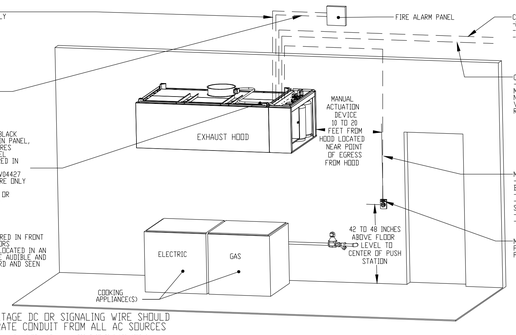

ATTENTION: LOW-VOLTAGE DC OR SIGNALING WIRE SHOULD BE ROUTED IN SEPARATE CONDUIT FROM ALL AC SOURCES

NOTE: SEE INSTALLATION, OPERATION, AND MAINTENANCE MANUAL FOR FURTHER INSTRUCTIONS

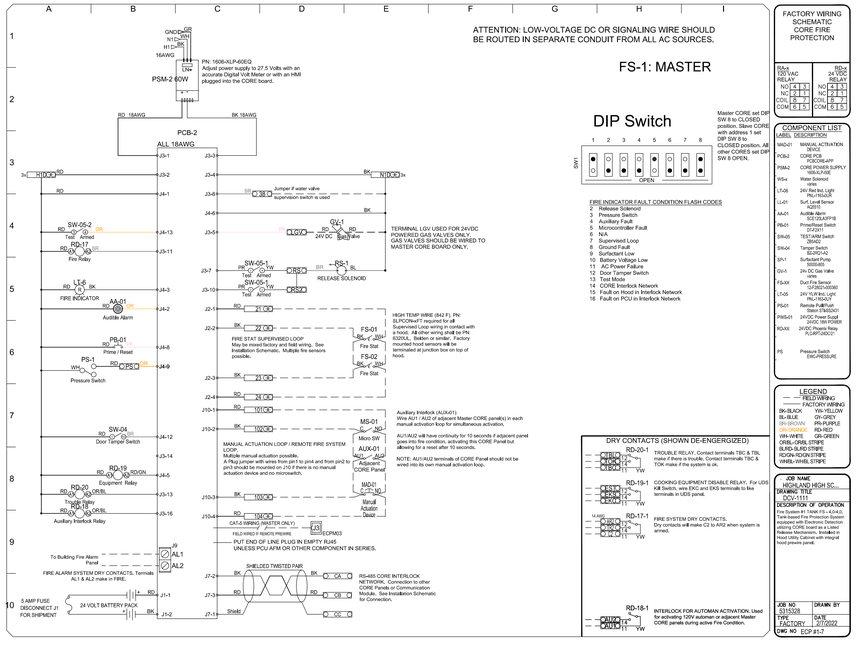

JOB NO	MODEL NUMBER	DRAWN BY	SCHEMATIC TYPE	DESCRIPTION OF OPERATION:
5315328	DCV-1111		INSTALL	Fire System #1 TANK FS - 4.0+/L Tank-based Fire Protection System equipped with Electronic Detection utilizing CORE board as a Listed Release Mechanism. Installed in Hood Utility Cabinet with integral hood prewire panel.
	JOB NAME: HIGHLAND HIGH SCHOOL	DATE: 2/7/2022	DWG NO: ECP #1-5	

TANK PROTECTION LOW-VOLTAGE FIGURES

02/10/2021 Rev. 17

FS-1: MASTER

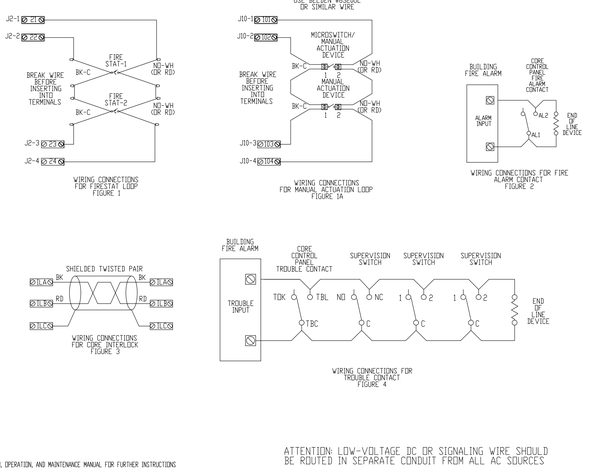

ATTENTION: LOW-VOLTAGE DC OR SIGNALING WIRE SHOULD BE ROUTED IN SEPARATE CONDUIT FROM ALL AC SOURCES

NOTE: SEE INSTALLATION, OPERATION, AND MAINTENANCE MANUAL FOR FURTHER INSTRUCTIONS

IDENTIFICATION STAMP
DIV. OF THE STATE ARCHITECT
APP: 03-122528 INC:
REVIEWED FOR
SS ☑ FLS ☑ ACS ☑
DATE: 01/06/2025

PTN: 63529-385 FILE: 15-H3

HIGHLAND HIGH SCHOOL
CAFETERIA REHABILITATION AND MODERNIZATION
2900 ROYAL SCOTS WAY
FOR
KERN HIGH SCHOOL DISTRICT
BAKERSFIELD, KERN COUNTY, CALIFORNIA

SCARCHITECT inc.
1601 NEW STINE ROAD, SUITE 280
BAKERSFIELD, CA 93309
PH: (661) 397-4377
FAX: (661) 397-4378
WWW.SCARCHITECT.COM
LICENSED ARCHITECT STEPHEN J. CORBIN C-16788 EXP. 12/31/24 STATE OF CALIFORNIA
STEPHEN J. CORBIN, NCARB, AIA, LEED ®AP

CHECK AND VERIFY ALL DIMENSIONS BEFORE PROCEEDING WITH THE WORK. REPORT DISCREPANCIES TO THE ARCHITECT. ALL CONSTRUCTION SHALL CONFORM TO THE C.B.C.

KERN HIGH SCHOOL DISTRICT — Tradition of Excellence — Est. 1893

KITCHEN
FIRE
SUPPRESSION
SYSTEM

MARK	DATE	REVISIONS
1		
2		
3		

REGISTERED PROFESSIONAL ENGINEER — MARK DAMES BASKIN — No. M26573 — EXP. 06-30-23 — MECHANICAL — STATE OF CALIFORNIA

JOB NO. 1319
DRAWN: MB
CHECKED: MB
DATE: 2/8/22

M

5.4
M OF - SHEETS

CAPTIVEAIRE
Oregon Office
www.captiveaire.com
2702 NE 114th Ave, Suite 2, Vancouver, WA, 98684 PHONE: (360) 828-5418 FAX: (919) 227-5983 EMAIL: reg90@captiveaire.com
BASKIN MECHANICAL ENGINEERS
175 Fulton Street
Fresno, CA 93721
Tel: (559) 237-0376
Job: 20141
Plt: 9/10/24

ELECTRICAL PACKAGE – JOB#5315328

NO	TAG	PACKAGE #	LOCATION	SWITCHES LOCATION	SWITCHES QUANTITY	OPTION	FANS CONTROLLED FAN TAG	TYPE		HP	VOLT	FLA
1		DCV-1111	UTILITY CABINET LEFT	03 - UTILITY CABINET LEFT	1 LIGHT	SMART CONTROLS DCV	KEF-1	EXHAUST	3	3.000	460	4.3
				HOOD # 1	1 FAN		MAU-1	SUPPLY	3	2.000	460	3.8

JOB NO 5315328 | MODEL NUMBER DCV-1111 | JOB NAME HIGHLAND HIGH SCHOOL | DRAWN BY | DATE 2/7/2022 | SCHEMATIC TYPE INSTALL | DWG NO ECP #1-1

DESCRIPTION OF OPERATION:
Demand Control Ventilation, w control for Exhaust Fan, 1 Supply Fan, Exhaust on in Fire, Lights out in Fire, Fans modulate based on duct temperature, INVERTER DUTY 3 PHASE MOTOR REQUIRED FOR USE WITH VFD. Room temperature sensor shipped loose for field installation Verify distance between VFD and Motor; additional cost could apply if distance exceeds 50 feet.

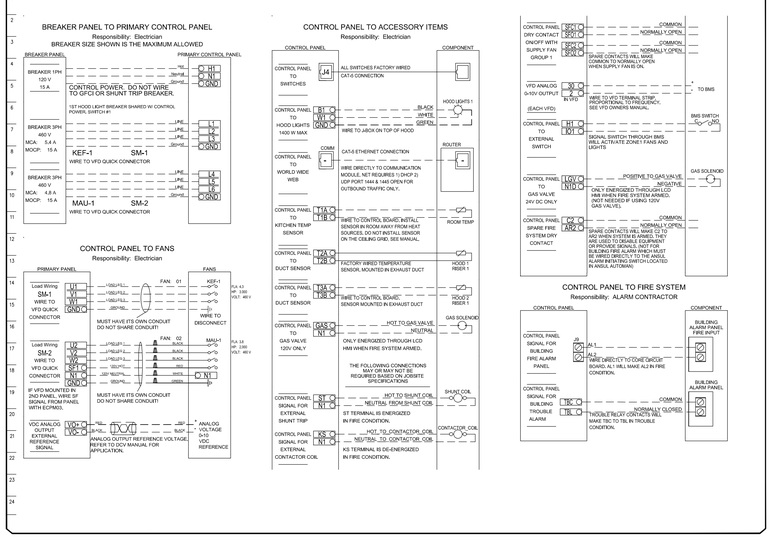

JOB NO 5315328 | MODEL NUMBER DCV-1111 | JOB NAME HIGHLAND HIGH SCHOOL | DRAWN BY | DATE 2/7/2022 | SCHEMATIC TYPE INSTALL | DWG NO ECP #1-2

DESCRIPTION OF OPERATION:
Demand Control Ventilation, w control for 1 Exhaust Fan, 1 Supply Fan, Exhaust on in Fire, Lights out in Fire, Fans modulate based on duct temperature, INVERTER DUTY 3 PHASE MOTOR REQUIRED FOR USE WITH VFD. Room temperature sensor shipped loose for field installation Verify distance between VFD and Motor; additional cost could apply if distance exceeds 50 feet.

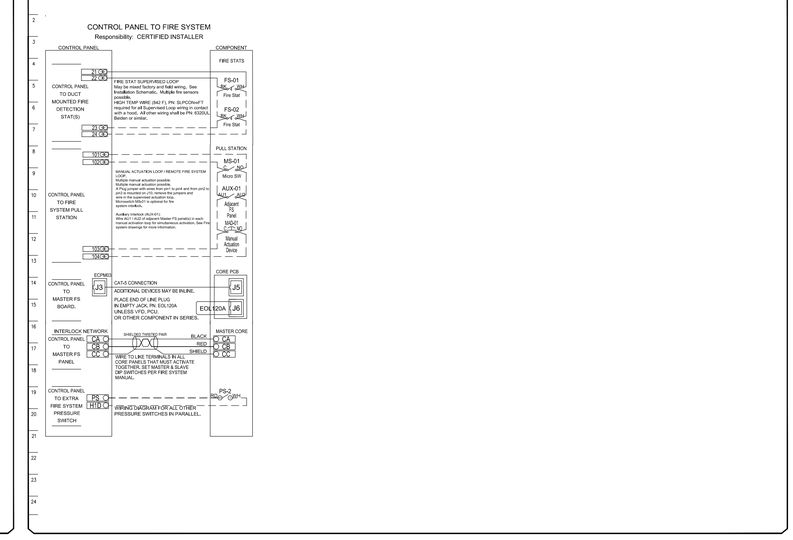

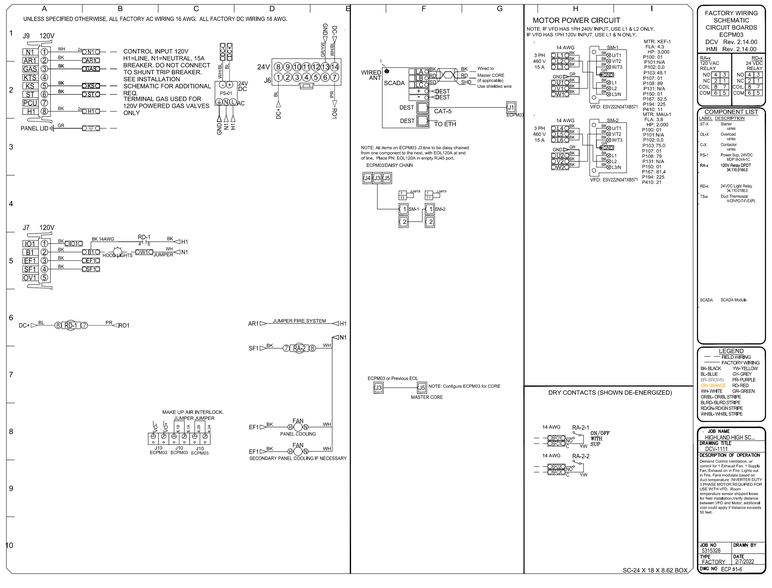

IDENTIFICATION STAMP
DIV. OF THE STATE ARCHITECT
APP: 03-122528 INC:
REVIEWED FOR
SS ☑ FLS ☑ ACS ☑
DATE: 01/06/2025

PTN : 63529-385 FILE: 15-H3

HIGHLAND HIGH SCHOOL

CAFETERIA REHABILITATION AND MODERNIZATION

2900 ROYAL SCOTS WAY
FOR
KERN HIGH SCHOOL DISTRICT
BAKERSFIELD, KERN COUNTY, CALIFORNIA

ARCHITECT S.C.I. inc.
1601 NEW STINE ROAD, SUITE 280
BAKERSFIELD, CA 93309
PH: (661) 397-4377
FAX: (661) 397-4378
WWW.SCARCHITECT.COM
LICENSED ARCHITECT STEPHEN J. CORBIN No. C-16785 Exp. 12/31/2025 STATE OF CALIFORNIA
STEPHEN J. CORBIN, NCARB, AIA, LEED ®-AP

CHECK AND VERIFY ALL DIMENSIONS BEFORE PROCEEDING WITH THE WORK. REPORT DISCREPANCIES TO THE ARCHITECT. ALL CONSTRUCTION SHALL CONFORM TO THE C.B.C.

KERN HIGH SCHOOL DISTRICT — Tradition of Excellence — Est. 1893

KITCHEN SYSTEMS WIRING AND CONTROLS

MARK	DATE	REVISIONS
1		
2		
3		

JOB NO. 1319
DRAWN : MB
CHECKED : MB
DATE : 2/8/22

M

5.5
M OF - SHEETS

CAPTIVEAIRE
www.captiveaire.com
Oregon Office
2702 NE 114th Ave, Suite 2, Vancouver, WA, 98684 PHONE: (360) 828-5418 FAX: (919) 227-5983 EMAIL: reg90@captiveaire.com

REGISTERED PROFESSIONAL ENGINEER MARK JAMES BASKIN No. M26572 Exp. 12-30-26 MECHANICAL STATE OF CALIFORNIA

BASKIN MECHANICAL ENGINEERS
175 Fulton Street
Fresno, CA 93721
Tel: (559) 237-0376
Job: 20141
Plt: 9/10/24

THERMISTOR INSTALLATION

NOTES: One Thermistor per Exhaust Riser
- Thermistor has 2 wires that connect to control cabinet

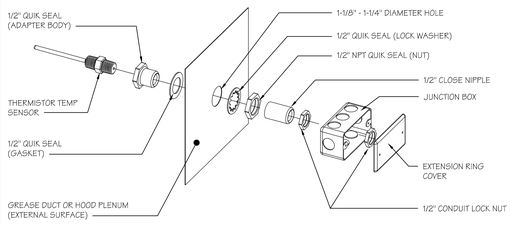

ROOM TEMPERATURE SENSOR

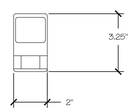

Provides room override based on temperature differential between the room and duct. Install on a wall in space but not directly under the hood or close to an appliance so the reading is accurate for space.

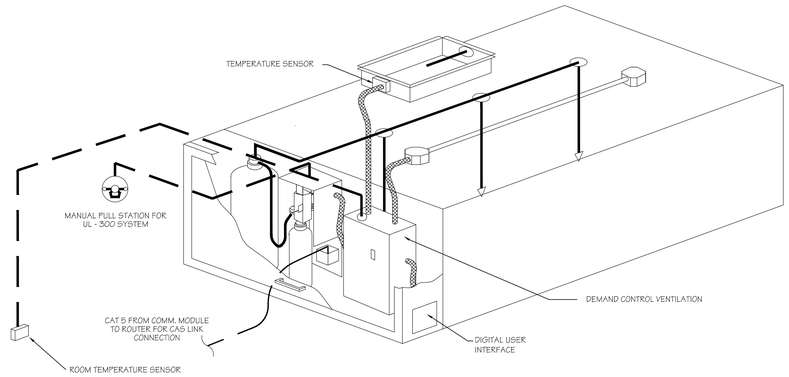

TYPICAL CONTROL DCV w/CASLink INSTALLATION

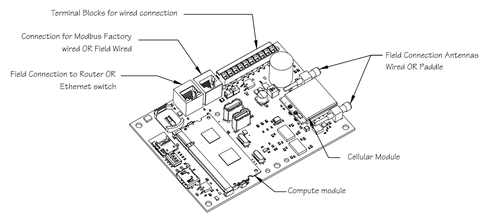

CASlink Monitor and Control

- *Hood control panel to support communications to cloud-based Building Management System.*
- *Hood Control Panel to allow cloud-based Building Management System to monitor real time parameters outlined as MONITOR in the points list.*
- *Hood Control Panel to allow cloud-based Building Management System to control parameters outlined as CONTROL in the points list.*
- *Hood Control Panel to allow cloud-based Building Management System to implement SYSTEM ECONOMIZER control strategies for fully integrated Building Management.*

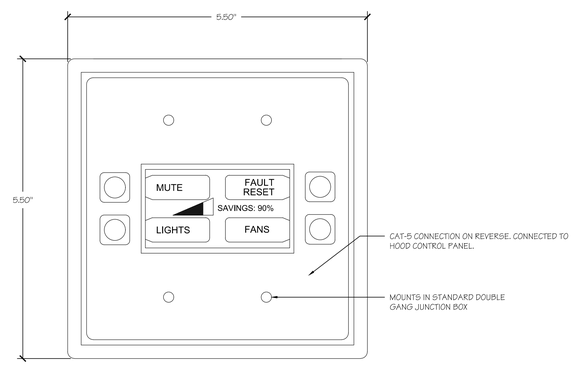

DIGITAL USER INTERFACE

IT IS THE RESPONSIBILITY OF THE EC TO MAKE ALL FIELD CONNECTIONS INTO AND OUT OF THE CAPTIVEAIRE CONTROL PANEL INCLUDING BUT NOT LIMITED TO LOW VOLTAGE, CAT 5, 24V WIRES TO ALL TEMP SENSORS, INCLUDING THE ROOM TEMP SENSOR, MOTOR LINE VOLTAGE POWER FEEDS, AND CONTROL WIRING.

REFER TO WIRING SCHEMATICS IN THIS DRAWING AND POSTED INSIDE OF THE CONTROL CABINET

FOR QUESTIONS, CALL
KURT CURTIS: REGIONAL MANAGER
PHONE: (360) 828-5418
FAX: (919) 227-5983
EMAIL: kurt.curtis@captiveaire.com

CAPTIVEAIRE
www.captiveaire.com
Oregon Office
2702 NE 114th Ave, Suite 2, Vancouver, WA, 98684 PHONE: (360) 828-5418 FAX: (919) 227-5983 EMAIL: reg90@captiveaire.com

BASKIN MECHANICAL ENGINEERS
175 Fulton Street
Fresno, CA 93721
Tel: (559) 237-0376
Job: 20141
Plt: 9/10/24

REGISTERED PROFESSIONAL ENGINEER MARK JAMES BASKIN No. M26571 Exp. 06-30-26 MECHANICAL STATE OF CALIFORNIA

IDENTIFICATION STAMP
DIV. OF THE STATE ARCHITECT
APP: 03-122528 INC:
REVIEWED FOR
SS ☑ FLS ☑ ACS ☑
DATE: 01/06/2025

PTN : 63529-385 FILE: 15-H3

HIGHLAND HIGH SCHOOL
CAFETERIA REHABILITATION AND MODERNIZATION
2900 ROYAL SCOTS WAY
FOR
KERN HIGH SCHOOL DISTRICT
BAKERSFIELD, KERN COUNTY, CALIFORNIA

ARCHITECT S.A.I. inc.
1601 NEW STINE ROAD, SUITE 280
BAKERSFIELD, CA 93309
PH: (661) 397-4377
FAX: (661) 397-4378
WWW.SCARCHITECT.COM
LICENSED ARCHITECT STEPHEN J. CORBIN C16788 LICENSE EXPIRES 12/31/2025 STATE OF CALIFORNIA
STEPHEN J. CORBIN, NCARB, AIA, LEED ®-AP

CHECK AND VERIFY ALL DIMENSIONS BEFORE PROCEEDING WITH THE WORK. REPORT DISCREPANCIES TO THE ARCHITECT. ALL CONSTRUCTION SHALL CONFORM TO THE C.B.C.

KERN HIGH SCHOOL DISTRICT
Tradition of Excellence
Est 1893

KITCHEN SYSTEMS HMI CONTROLS

MARK	DATE	REVISIONS
1		
2		
3		

JOB NO. 1319
DRAWN : MB
CHECKED : MB
DATE : 2/8/22

M

5.6
M OF - SHEETS

Project Name:	Highland Cafeteria	Date Prepared:	2023-02-01

A. General Information

1	Project Name	Highland Cafeteria			
2	Run Title	Title 24 Analysis			
3	Project Location	2900 Royal Scotts Way			
4	City	Bakersfield	5	Standards Version	
6	Zip code	93306	7	Compliance Software (version)	EnergyPro 9.0
8	Climate Zone	13	9	Building Orientation (deg)	270
10	Building Type(s)	• Nonresidential	11	Weather File	MEADOWS-FIELD_STYP20.epw
12	Project Scope	• Existing addition and alteration	13	Number of Dwelling Units	0
14	Total Conditioned Floor Area in Scope (ft^2)	9154	15	Total # of hotel/motel rooms	0
16	Total Unconditioned Floor Area (ft^2)	0	17	Fuel Type	Natural gas
18	Nonresidential Conditioned Floor Area	9154	19	Total # of Stories (Habitable Above Grade)	1
20	Residential Conditioned Floor Area	0			

B1. PROJECT SUMMARY

Table B shows which building components are included in the performance calculation. If indicated as not included, the project must show compliance prescriptively if within the permit application.

Building Components Complying via Performance					Building Components Complying Prescriptively	
Envelope (See Table G) Nonres	☒ Performance	Covered Process: Commercial Kitchens (see Table J)	☒ Performance		The following building components are ONLY eligible for prescriptive compliance and should be documented on the NRCC form listed if within the scope of the permit application (i.e. compliance will not be shown on the NRCC-PRF-E).	
	☐ Not Included		☐ Not Included			
Mechanical (See Table H) Nonres	☒ Performance		☐ Performance		Indoor Lighting (Unconditioned) 140.6 & 170.2(e)	NRCC-LTI-E is required
	☐ Not Included		☒ Not Included		Outdoor Lighting 140.7 & 170.2(e)	NRCC-LTO-E is required
Domestic Hot Water (See Table I) Nonres	☐ Performance	Covered Process: Laboratory Exhaust (see Table J)	☐ Performance		Sign Lighting 140.8 & 170.2(e)	NRCC-LTS-E is required
	☒ Not Included		☒ Not Included			
Lighting (Indoor Conditioned, see Table K) Nonres	☒ Performance	*Electrical power systems, commissioning, solar ready, elevator and escalator requirements are mandatory and should be documented on the NRCC form listed if applicable (i.e. compliance will not be shown on the NRCC-PRF-E.)*			**Building Components Complying with Mandatory Measures**	
	☐ Not Included				Electrical Power Distribution 110.11	NRCC-ELC-E is required
Solar Thermal Water Heating (See Table I3)	☐ Performance				Commissioning 120.8	NRCC-CXR-E is required
	☒ Not Included				Solarand Battery 110.10	NRCC-SAB-E is required

C1. COMPLIANCE SUMMARY

COMPLIES[3]

	Time Dependent Valuaton (TDV)		Source Energy Use
	Efficiency[1] (kBtu/ft^2 - yr)	Total[2] (kBtu/ft^2 - yr)	Total[2] (kBtu/ft^2 - yr)
Standard Design	502.97	464.06	36.93
Proposed Design	453.09	453.09	35.2
Compliance Margins	**49.88**	**10.97**	**1.73**
	Pass	**Pass**	**Pass**

[1] *Efficiency measures include improvements like a better building envelope and more efficient equipment*
[2] *Compliance Totals include efficiency, photovoltaics and batteries*
[3] *Building complies when efficiency and total compliance margins are greater than or equal to zero and unmet load hour limits are not exceeded*

C2. TDV ENERGY COMPLIANCE RESULTS FOR PERFORMANCE COMPONENTS (Annual TDV Energy Use, kBtu/ft^2 - yr)

COMPLIES[2]

Energy Component	Standard Design (TDV)	Proposed Design (TDV)	Compliance Margin (TDV)[1]
Space Heating	10.12	25.41	-15.29
Space Cooling	247.09	233.38	13.71
Indoor Fans	159.7	97.76	61.94
Heat Rejection	0	0	0
Pumps & Misc.	0	0	0
Domestic Hot Water	20.23	30.71	-10.48
Indoor Lighting	65.83	65.83	0
Flexibility	---	---	---
EFFICIENCY COMPLIANCE TOTAL	**502.97**	**453.09**	**49.88 (9.9%)**
Photovoltaics	-38.91	---	-38.91
Batteries	---	---	---
TOTAL COMPLIANCE	**464.06**	**453.09**	**10.97 (2.4%)**

[1] *Notes: This number in parenthesis following the Compliance Margin in column 4, represents the Percent Better than Standard.*

C3. TDV ENERGY RESULTS FOR NON-REGULATED COMPONENTS[1]

Non-Regulated Energy Component	Standard Design (TDV)	Proposed Design (TDV)	Compliance Margin (TDV)[1]
Receptacle	192.24	192.24	---
Process	862.38	862.38	---
Other Ltg	---	---	---
Process Motors	---	---	---
TOTAL (TOTAL COMPLIANCE + NON-REGULATED COMPONENTS)	**1518.68**	**1507.71**	**10.97 (0.7%)**

[1] *Notes: This table is not used for Energy Code Compliance.*

C4. SOURCE ENERGY COMPLIANCE RESULTS FOR PERFORMANCE COMPONENTS (Annual SOURCE Energy Use, kBtu/ft^2 /yr)

COMPLIES[2]

Energy Component	Standard Design (SOURCE)	Proposed Design (SOURCE)	Compliance Margin (SOURCE)[1]
Space Heating	1.27	3.32	-2.05
Space Cooling	15.43	14.7	0.73
Indoor Fans	13.97	8.79	5.18
Heat Rejection	0	0	0
Pumps & Misc.	0	0	0
Domestic Hot Water	1.84	2.48	-0.64
Indoor Lighting	5.91	5.91	0
Flexibility	---	---	---
EFFICIENCY COMPLIANCE TOTAL	**38.42**	**35.2**	**3.22 (8.4%)**
Photovoltaics	-1.49	---	-1.49
Batteries	---	---	---
TOTAL COMPLIANCE	**36.93**	**35.2**	**1.73 (4.7%)**

[1] *Notes: This number in parenthesis following the Compliance Margin in column 4, represents the Percent Better than Standard.*

C5. SOURCE ENERGY RESULTS FOR NON-REGULATED COMPONENTS[1]

Non-Regulated Energy Component	Standard Design (SOURCE)	Proposed Design (SOURCE)	Compliance Margin (SOURCE)[1]
Receptacle	37.2	37.2	---
Process	82.46	82.46	---
Other Ltg	---	---	---
Process Motors	---	---	---
TOTAL (TOTAL COMPLIANCE + NON-REGULATED COMPONENTS)	**156.59**	**154.86**	**1.73 (1.1%)**

[1] *Notes: This table is not used for Energy Code Compliance.*

C6. 'ABOVE CODE' QUALIFICATIONS

☐ This project is pursuing CalGreen Tier 1 ☐ This project is pursuing CalGreen Tier 2

C7. ENERGY USE SUMMARY

Energy Component	Standard Design Site (MWh)	Proposed Design Site (MWh)	Margin (MWh)	Standard Design Site (MBtu)	Proposed Design Site (MBtu)	Margin (MBtu)
Space Heating	2.7	7.3	-4.6	0.2	0.1	0.1
Space Cooling	63.1	58.8	4.3	---	---	---
Indoor Fans	50.3	31.5	18.8	---	---	---
Heat Rejection	---	---	---	---	---	---
Pumps & Misc.	---	---	---	---	---	---
Domestic Hot Water	7.5	11.4	-3.9	---	---	---
Indoor Lighting	21.7	21.7	0	---	---	---
Flexibility	---	---	---	---	---	---
EFFICIENCY TOTAL	**145.3**	**130.7**	**14.6**	**0.2**	**0.1**	**0.1**
Photovoltaics	-18.1	---	---	---	---	---
Batteries	---	---	---	---	---	---
ENERGY USE SUBTOTAL	**127.2**	**130.7**	**-3.5**	**0.2**	**0.1**	**0.1**
Receptacle	39.9	39.9	0	264.2	264.2	0
Process	276.4	276.4	0	---	---	---
Other Ltg	---	---	---	---	---	---
Process Motors	---	---	---	---	---	---
ENERGY USE TOTAL	**443.5**	**447**	**-3.5**	**264.4**	**264.3**	**0.1**

C8. ENERGY USE INTENSITY (EUI)

	Standard Design (kBtu/ft^2 / yr)	Proposed Design (kBtu/ft^2 / yr)	Margin (kBtu/ft^2 / yr)	Margin Percentage
GROSS EUI[1]	200.94	195.48	5.46	2.72
NET EUI[1]	194.19	195.48	-1.29	-0.66

1Notes: Gross EUI is Energy Use Total (not including PV)/Total Building Area. Net EUI is Energy Use Total (including PV)/Total Building Area.

D1. EXCEPTIONAL CONDITIONS

- HvacMinEfficiencyCheck
- NoServiceWaterHeating
- NoCoolSystemSimulated
- CoolEquipmentAddedForLoads

G1. ENVELOPE GENERAL INFORMATION (conditioned spaces only)

1	2	3	4
Opaque Surfaces & Orientation	Total Gross Surface Area (ft^2)	Total Fenestration Area (ft^2)	Window to Wall Ratio (%)
North-Facing[1]	902	320	35.48
East-Facing[2]	1276.5	112	8.77
South-Facing[3]	1115	96	8.61
West-Facing[4]	1283	112	8.73
Total	**4576.5**	**640**	**13.98**
Roof	9154	0	0

Notes
[1] *North-Facing is oriented to within 45 degrees of true north, including 45 00'00" east of north (NE), but excluding 45 00'00" west of north (NW),*
[2] *East-Facing is oriented to within 45 degrees of true east, including 45 00'00" south of east (SE), but excluding 45 00'00" north of east (NE),*
[3] *South-Facing is oriented to within 45 degrees of true south, including 45 00'00" west of south (SW), but excluding 45 00'00" east of south (SE),*
[4] *West-Facing is oriented to within 45 degrees of true west, including 45 00'00" north of west (NW), but excluding 45 00'00" south of west (SW),*

G4. NONRESIDENTIAL AIR BARRIER

01	02
Building Story Name	Air Barrier
Com-Floor 1	No air barrier

G5. OPAQUE SURFACE ASSEMBLY SUMMARY

01	02	03	04	05	06		07	08	09	10
Surface Name		Area (ft^2)	Framing Type	Cavity R-Value	Continuous R-Value		Units	Value	Description of Assembly Layers	Status[1]
					Interior	Exterior				
R-30 Batt Insulation belo6	Roof	9,154	N/A	0	N/A	30	U-factor	0.0301	Asbestos or cement shingles - 3/8 in. Metal Deck - 1/16 in. Glass fiber batt - 8 1/4 in. R30C (CEC Default) Air - Cavity - Wall Roof Ceiling - 4 in. or more Acoustic Tile - 1/2 in.	A
8 CMU Wall8	Exterior Wall	4,576.5	N/A	0	N/A	N/A	U-factor	0.579	Concrete - Solid Grout - 115 lb/ft3 - 8 in.	E
Slab On Grade15	Underground Floor	9,154	N/A	0	N/A	N/A	F-factor	0.73	Slab Type =Unheated slab on grade Insulation Orientation =None Insulation R-Value =none	N

[1] *Status: N - New, A - Altered, E - Existing*

G6A. OPAQUE DOOR SUMMARY (NONRESIDENTIAL)

01	02	03	04
Assembly Name	Area (ft^2)	Overall U-factor	Status[1]
Insulated Door24	60	0.2	E

G7A. FENESTRATION ASSEMBLY SUMMARY (NONRESIDENTIAL)

01	02	03	04	05	06	07	08	09
Fenestration Assembly Name	Fenestration Type/ Product Type / Frame Type	Certification Method[1]	Assembly Method	Area (ft^2)	Overall U-factor	Overall SHGC	Overall VT	Status[2]
Single Metal Tinted	Vertical fenestration Fixed window Metal	Default 110.6	Site built	640	1.19	0.68	0.77	Existing

G8. OVERHANG DETAILS

01	02	03	04	05	06	07
Fenestration Tag/ ID	Azimuth	Depth (ft)	Height from Top of Sill to Overhang (ft)	Right Extent (ft)	Left Extent (ft)	Flap Height
Window39	270	8	8.1	10	10	N/A

H1. DRY SYSTEM EQUIPMENT (FURNACES, AIR HANDLING UNITS, HEAT PUMPS, VRF, ECONOMIZERS ETC.)

01	02	03	04	05	06	07	08	09	10	11	12
Equipment Name	Equipment Type	Qty	Heating				Cooling			Economizer Type (if present)	Status[1]
			Total Heating Output (kBtu/h)	Supp Heat Output (kBtu/h)	Efficiency Unit	Efficiency	Total Cooling Output (kBtu/h)	Efficiency Unit	Efficiency		
AC-1	Package SZ VAV AC Air System	1	178	0	AFUE	81	178	EER	11.5	Fixed DB	N
HP-3	Single Zone Heat Pump (SZHP) Air System	1	26.85	0	HSPF	12.5	26.85	EER SEER	20.5 12.5	No Economizer	N
HP-1 HP-2	Variable Refrigerant Flow	2	189	N/A	COP	3.7	189	EER	11.2	N/A	N

[1] *Status: N - New, A - Altered, E - Existing*

H3. NONRESIDENTIAL / COMMON USE AREA FAN SYSTEMS SUMMARY

01	02	03	04	05	06	07	08	09	10	11	12	13
Name or Item Tag	Qty	Design OA CFM	Supply Fan				Return / Relief Fan					Status[1]
			CFM	Power	Power Units	Control	Fan Type	CFM	Power	Power Units	Control	
AC-1	1	476.4	6,000	4.5	BHP	VSD	N/A	N/A	N/A	N/A	N/A	N
HP-3	1	130	750	0.28	BHP	Constant Vol	N/A	N/A	N/A	N/A	N/A	N

[1] *Status: N - New, A - Altered, E - Existing*

H5. GENERAL EXHAUST FAN SUMMARY

1	2	3	4	5	6	7	8
System ID	Zone Name	Qty	CFM	PowerPowerPower	Power Units	Continuous Operation?	Status[1]
Kitchen16	2-Kitchen	1	2240	1	0.38	1.42	New

[1] *Status: N - New, A - Altered, E - Existing*

H8. SYSTEM SPECIAL FEATURES

1	2	3	4
System Name	Equipment Type	Interlocks per 140.4(n)[1]	Other Special Features and Controls
AC-1	Package SZ VAV AC Air System	N/A	Fixed DB

Notes: This table includes controls related to the performance path only. For projects using the prescriptive path, mandatory and prescriptive controls requirements are documented on the NRCC-MCH-E.

[1] *Yes = interlocks are provided, No = interlocks are not provided, NA means no operable openings.*

H9. NONRESIDENTIAL / COMMON USE AREA & HOTEL/MOTEL VENTILATION

1	2	3	4	5	6	7
Zone Name	Mechanical Ventilation				Conditioned Area (sf)	DCV or Occupant Sensor Controls, or Both
	Ventilation Function	# of People# of People	Supply OA CFM	Exhaust CFM		
1-Multi-Purpose	Education - Multiuse assembly	142.95	2859	0	5718	N/A
2-Kitchen	Food Service - Kitchen (cooking)	7.94	476.4	2240	3176	N/A
3-Teacher Lounge	General - Break rooms	8.67	130	0	260	N/A

H11. ZONAL SYSTEM AND TERMINAL UNIT SUMMARY

01	02	03	04	05	06	07	08	09	10	11	12
System ID	System Type	Qty	Rated Capacity (kBtuh)		Airflow (cfm)			Fan			VSD
			Heating	Cooling	Design	MIn.	Min. Ratio	Power	Power Units	Cycles	
2-Kitchen-Trm	Variable Air Volume No Reheat Box	1	N/A	N/A	5,000	3,750	0.75	4.5	BHP	N/A	Variable Speed
3-Teacher Lounge-Trm	Uncontrolled	1	N/A	N/A	750	N/A	0	0.28	BHP	N/A	Constant Speed
2-Multi-Purpose-VRF	Variable Refrigerant Flow	4	76.05	89.09	2,825	N/A	N/A	0.91	BHP	Continuous	Constant Speed

J2. COMMERCIAL KITCHENS

1	2	3	4	5
Space Name	Exhaust Hood Style	Exhaust Hood Duty	Exhaust Length	Exhaust Flow Rate (cfm)
S-2-Kitchen	WallMountedCanopy	MediumDuty	18.5	2240

K1. INDOOR CONDITIONED LIGHTING GENERAL INFO

01	02	03	04	05	06
Occupancy Type[1]	Conditioned Floor Area[2] (ft^2)	Installed Lighting Power (Watts)	Lighting Control Credits (Watts)	Additional (Custom) Allowance	
				Area Category Footnotes (Watts)	Area Category Footnotes (Watts)
Classroom, Lecture, or Training Vocational	5718	3430.8	0	0	0
Kitchen/ Food Preparation	3176	3017.2	0	0	0
Lounge	260	143	0	0	0
Building Totals:	**9154**	**6591**	**0**	**0**	**0**

[1] *See Table 140.6-C*
[2] *See NRCC-LTI--E for unconditioned spaces*
[3] *Lighting information for existing spaces modeled is not included in this table*

K4. INDOOR CONDITIONED LIGHTING MANDATORY LIGHTING CONTROL

L. DECLARATION OF REQUIRED CERTIFICATES OF INSTALLATION

Selections made by Documentation Author indicate which Certificates of Installation must be submitted for the features to be recognized for compliance. These documents must be retained and provided to the building inspector during construction and can be found online

Building Component	Form/Title
Envelope	NRCI-ENV-01-E - Must be submitted for all buildings
Envelope	NRCI-ENV-E - Envelope (for all buildings)
Mechanical	NRCI-MCH-01-E - Must be submitted for all buildings
Mechanical	NRCI-MCH-E - For all buildings with Mechanical Systems
Indoor Lighting	NRCI-LTI-E - Indoor Lighting (for all buildings)
Covered Process	NRCI-PRC-01-E - Must be submitted for all Covered Processes

M. DECLARATION OF REQUIRED CERTIFICATES OF ACCEPTANCE

Selections made by Documentation Author indicate which Certificates of Acceptance must be submitted for the features to be recognized for compliance. These documents must be provided to the building inspector during construction and must be completed through an Acceptance Test Technician Certificaiton Provider (ATTCP). For more information visit: https://www.energy.ca.gov/title24/2019standards/2019_compliance_documents/Nonresidential_Documents/NRCA/

Building Component	Form/Title
Envelope	NRCA-ENV-02-F - NRFC label verification for fenestration
Covered Process	NRCA-PRC-02-F Kitchen Exhaust
Mechanical	NRCA-MCH-02-A - Outdoor Air must be submitted for all newly installed HVAC units. Note: MCH-02-A can be performed in conjunction with MCH-07-A Supply Fan VFD Acceptance (if applicable) since testing activities overlap
Mechanical	NRCA-MCH-03-A - Constant Volume Single Zone HVAC
Mechanical	NRCA-MCH-05-A - Air Economizer Controls
Mechanical	NRCA-MCH-12-A FDD for Packaged Direct Expansion Units
Mechanical	NRCA-MCH-21-H Multifamily Envelope

N. DECLARATION OF REQUIRED CERTIFICATES OF VERIFICATION

Selections made by Documentation Author indicate which Certificates of Verification must be submitted for the features to be recognized for compliance. These documents must be retained and provided to the building inspector during construction and can be found online

Building Component	Form/Title
Mechanical	NRCV-MCH-24 Enclosure Air Leakaage

Documentation Author's Declaration Statement

1. I certify that this Certificate of Compliance documentation is accurate and complete.

Documentation Author Name: Mark J Baskin P.E.	Documentation Author Signature:
Company: Baskin Mechanical Engineers	Signature Date: 02-01-2023 Mark Baskin, P.E. Mark Baskin, P.E. 2023.02.01 17:53:47-08'00'
Address: 175 Fulton St.	CEA/HERS Certification Identification (if applicable): M26578
City/State/Zip: ,	Phone: 559-237-0376

Responsible Person's Declaration statement

2. I certify the following under penalty of perjury, under the laws of the State of California:

1. The information provided on this Certificate of Compliance is true and correct.
2. I am eligible under Division 3 of the Business and Professions Code to accept responsibility for the building design or system design identified on this Certificate of Compliance (responsible designer)
3. The energy features and performance specifications, materials, components, and manufactured devices for the building design or system design identified on this Certificate of Compliance conform to the requirements of Title 24, Part 1 and Part 6 of the California Code of Regulations.
4. The building design features or system design features identified on this Certificate of Compliance are consistent with the information provided on other applicable compliance documents, worksheets, calculations, plans and specifications submitted to the enforcement agency for approval with this building permit application.
5. I understand that a registered copy of this Certificate of Compliance shall be made available with the building permit(s) issued for the building, and made available to the enforcement agency for all applicable inspections, and I will take the necessary steps to accomplish this requirement.
6. I understand that a registered copy of this Certificate of Compliance is required to be included with the documentation the builder provides to the building owner at occupancy, and I will take the necessary steps to accomplish these requirements.

Responsible Designer Name: Mark Baskin, P.E.	Responsible Designer Signature: Mark Baskin, P.E. Mark Baskin, P.E. 2023.02.01 17:54:29-08'00'	
Company: Baskin Mechanical Engineers		
Address: 5500 Ming Avenue, #251	Date Signed: 02-01-2023	
City/State/Zip: Bakersfield, CA 93309	License #: M26578	
Phone: (661) 397-2114	Title: P.E.	Scope: Mechanical

REGISTERED PROFESSIONAL ENGINEER MARK JAMES BASKIN No. M26578 Exp. 9-30-26 MECHANICAL STATE OF CALIFORNIA

BASKIN MECHANICAL ENGINEERS
175 Fulton Street
Fresno, CA 93721
Tel: (559) 237-0376
Job: 20141
Plt: 9/10/24

IDENTIFICATION STAMP
DIV. OF THE STATE ARCHITECT
APP: 03-122528 INC:
REVIEWED FOR
SS ☒ FLS ☒ ACS ☒
DATE: 01/06/2025

PTN : 63529-385 FILE: 15-H3

HIGHLAND HIGH SCHOOL
CAFETERIA REHABILITATION AND MODERNIZATION
2900 ROYAL SCOTS WAY
FOR
KERN HIGH SCHOOL DISTRICT
BAKERSFIELD, KERN COUNTY, CALIFORNIA

SC ARCHITECT inc.
1601 NEW STINE ROAD, SUITE 280
BAKERSFIELD, CA 93309
PH: (661) 397-4377
FAX: (661) 397-4378
WWW.SCARCHITECT.COM

STEPHEN J. CORBIN, NCARB, AIA, LEED ®-AP

CHECK AND VERIFY ALL DIMENSIONS BEFORE PROCEEDING WITH THE WORK. REPORT DISCREPANCIES TO THE ARCHITECT. ALL CONSTRUCTION SHALL CONFORM TO THE C.B.C.

KERN HIGH SCHOOL DISTRICT

TITLE-24

MARK	DATE	REVISIONS
1		
2		
3		

JOB NO. 1319
DRAWN : MB
CHECKED : MB
DATE : 2/8/22

M
6.0
OF ## SHEETS

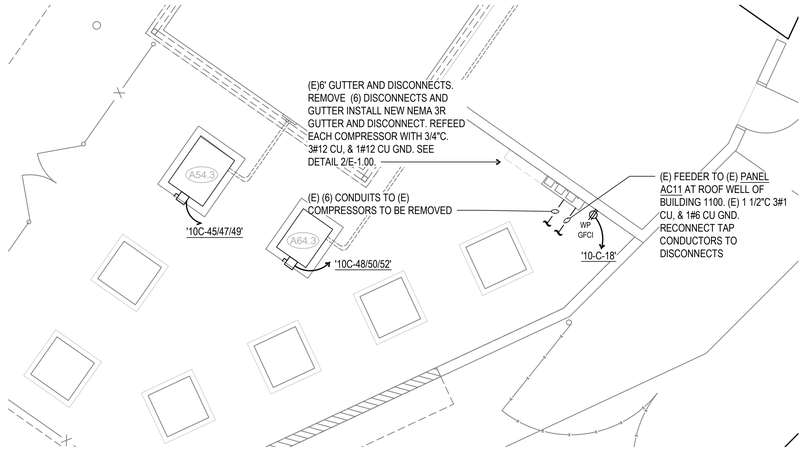

PARTIAL ELECTRICAL SITE PLAN

SCALE: 1/8"=1'-0" (1 / E1.00)

-

GENERAL TITLE 24 LIGHTING NOTES:

REFER TO CALIFORNIA ENERGY CODE FOR ALL REQUIREMENTS.

REFER TO LIGHTING CONTROL WIRING DIAGRAM AND DAYLIT FLOOR PLAN AND COMPLY WITH THE FOLLOWING:

1. LUMINARIES IN THE SKYLIT ZONE SHALL BE CONTROLLED SEPARATELY FROM THOSE IN THE PRIMARY SIDELIT DAYLIT ZONES.
2. LUMINARIES THAT FALL IN BOTH, A SKYLIT AND PRIMARY SIDELIT DAYLIT ZONE, SHALL BE CONTROLLED AS PART OF THE SKYLIT DAYLIT ZONE.
3. LUMINARIES IN THE SECONDARY DAYLIT ZONE SHALL BE CONTROLLED INDEPENDENTLY FROM ALL OTHER LUMINARIES,INCLUDING THOSE IN THE SKYLIT AND PRIMARY SIDELT ZONES. LUMINARIES THAT FALL IN BOTH PRIMARY AND SECONDARY SIDELIT DAYLIT ZONES SHALL BE CONTROLLED AS PART OF THE PRIMARY SIDELIT DAYLIT ZONE.
4. LUMINARIES THAT FALL IN ALL THREE ZONES SHALL BE CONTROLLED AS PART OF THE SKYLIT DAYLIT ZONE.
5. PROVIDE SHOP DRAWING OF LIGHTING CONTROL SYSTEM.
6. NETWORK CABLING NOT SHOWN FOR CLARITY. REFER TO CONTROL DIAGRAM.
7. CONTROL EQUIPMENT IS INDICATED DIAGRAMMATICALLY. LOCATE IN ACCESSIBLE ATTIC SPACES.

MEP Component Anchorage Note:

All mechanical, plumbing , and electrical components shall be anchored and installed per the details on the DSA approved construction documents. Where no detail is indicated, the following components shall be anchored or braced to meet the force and displacement requirements prescribed in the 2022 CBC Sections. 1617A.1.18 through 1617A.1.26 and ASCE 7 -16 Chapter 13,26 and 30.

1. All permanent equipment and components.
2. Temporary or movable equipment that is permanently attached (e. g. hard, wired) to the building utility services such as electricity, gas or water. "Permenantly attached" shall include all electrical connections except plugs for 110/220 volt receptacles having flexible cable.
3. Temporary, movable equipment or mobile equipment which is heavier than 400 lbs or has a center of mass located 4 feet or more above the adjavent floor or roof level that directly support the component is required to be restrained in a manner approved by DSA.

The following mechanical and electrical components shall be positively attached to the structure, but need not demonstrate design compliance with the references noted above. These components shall have flexible connections provided between the component and associated ductwork, piping, and conduit. Flexible connections must allow movement in both traverse and longitudinal directions

A. Components weighing less than 400 pounds and have a center of mass located 4 feet or less above the adjacent floor or roof level that directly support the component.
B. Components weighing less than 20 pounds or in the case of distributed systems, less than 5 pounds per foot, which are suspended from a roof or floor or hung from a wall.

The anchorage for all mechanical, electrical and plumbing components shall be subject to approval of the design professional in general responsible charge or Structural Engineer delegated responsibility and acceptance by DSA. The project inspector will verify that all components and equipment have been anchored in accordance with the above requirements.

Piping, Ductwork, and Electrical Distribution System Bracing Note:

Piping, ductwork, and electrical distribution systems shall be braced to comply with the forces and displacements prescribed in ASCE 7-16 Section 13.3 as defined in ASCE 7-16 Sections 13.6.5., 13.6.6, 13.6.7, 13.6.8 and 2022 CBC Sections 1617A.1.24, 1617A.1.25 and 1617A.1.26.

The method of showing bracing and attachments to the structure for the identified distribution system are as noted below. When bracing and attachments are based on a pre-approved installation guide (e.g. OSHPD OPM for 2013 CBC or later), Copies of the bracing system installation guide or manual shall be available on the jobsite prior to the start of and during the hanging and bracing of the distribution systems. The Structural Engineer of Record shall verify the adequacy of the structure to support the hanger and brace loads.

Mechanical piping (MP), Mechanical Ducts (MD), Plumbing Piping (PP), Electrical Distribution Systems(E):

MP☐ MD☐ PP☐ E☒ Option 1: Detailed on the approved drawings with project specific notes and details.

MP☐ MD☐ PP☐ E☐ Option 2: Shall comply with the applicable OSHPD Pre-Approval (OPM#) #OPM-0052-13

GENERAL ELECTRICAL NOTES

1. PROVIDE MINIMUM 36" WORK CLEARANCE IN FRONT OF PANELS, SERVICE OR EQUIPMENT RATED AT 120/208V 3Ø 4W (PER CEC-110.26).
2. PROVIDE MINIMUM 42" WORK CLEARANCE IN FRONT OF PANELS, SERVICE OR EQUIPMENT RATED AT 480/277V 3Ø 4W (PER CEC-110.26).
3. PROVIDE MINIMUM 30" WIDE WORK SPACE FOR PANELS, SERVICE OR EQUIPMENT (PER CEC-110.26).
4. SPECIFY THAT ONLY LISTED OR LABELED EQUIPMENT SHALL BE INSTALLED IN ACCORDANCE WITH INSTRUCTIONS INCLUDED IN THE LISTING AND LABELING (PER CEC-110.3(B)).
5. SWITCHES SHALL BE MOUNTED A MAXIMUM OF 48" TO THE TOP OF BOX. RECEPTACLES SHALL BE MOUNTED A MINIMUM OF 15" TO THE BOTTOM OF BOX PER CBC 2022 SECTION 11B-308.
6. HVAC CIRCUIT BREAKERS SHALL BE RATED HACR.
7. ALL SERVICE EQUIPMENT TO BE SUITABLE FOR AVAILABLE SHORT CIRCUIT CURRENT PER CEC ART 110.9.
8. PERMANENTLY DELINEATE ON THE FLOOR WORKING CLEARANCE IN FRONT OF ALL ELECTRICAL EQUIPMENT WITH THE WORDING "NO STORAGE IN THIS AREA". APPLIES TO ELECTRICAL ROOMS AND CLOSETS ONLY.
9. PRIOR TO ORDERING THE SWITCHGEAR, THE ELECTRICAL CONTRACTOR SHALL COORDINATE A.I.C. RATINGS OF SWITCHBOARDS AND PANEL BOARDS PER UTILITY COMPANY REQUIREMENTS. EVIDENCE OF SUCH COORDINATION SHALL BE AVAILABLE ON SITE FOR REVIEW BY INSPECTOR OF RECORD (IOR).
10. SWITCHBOARDS AND PANEL BOARDS THAT ARE LIKELY TO BE ENERGIZED WHILE BEING MAINTAINED OR SERVICED BY QUALIFIED PERSONNEL SHALL BE LABELED WARNING OF POSSIBLE ARC FLASH HAZARDS AND IDENTIFIED WITH THE APPROPRIATE ARC FLASH PROTECTION RATING PERSONAL PROTECTIVE EQUIPMENT (PPE) SIGNAGE (PER CEC ART. 110.16).
11. CONTRACTOR IS TO PROVIDE ENGRAVED NAMEPLATES ON EACH SERVICE PANEL, TRANSFORMER, DISCONNECT SWITCH MOTOR STARTER, ETC. (PER CEC-110.3).
12. CONTRACTOR WILL BE REQUIRED TO PROVIDE A LABEL PER CEC ARTICLE 408.4(A). PROVIDE TYPED PANEL BOARD DIRECTORIES. PANEL BOARDS SHALL ALSO BE MARKED COMPLIANT WITH CEC 408.4(B) FOR ORIGINATED SOURCE OF POWER.
13. NO PIPING, DUCTS, OR EQUIPMENT FOREIGN TO ELECTRICAL EQUIPMENT SHALL BE PERMITTED TO BE LOCATED WITHIN 6 FEET OF THE FLOOR OR TO THE STRUCTURAL CEILING ABOVE THE SPACE OF ELECTRICAL EQUIPMENT (PER CEC ART. 110.26).
14. EACH MULTIWIRE BRANCH CIRCUIT SHALL BE PROVIDED WITH A MEANS THAT WILL SIMULTANEOUSLY DISCONNECT ALL UNGROUNDED CONDUCTORS AT THE POINT WHERE THE BRANCH CIRCUIT ORIGINATES, SUCH AS HANDLE-TIES AND MULTI-POLE BREAKERS (PER CEC- 210.4(B)).
15. THE DISCONNECTING MEANS FOR EACH SERVICE, FEEDER OR BRANCH CIRCUIT ORIGINATING ON A SWITCHBOARD OR PANELBOARD SHALL BE LEGIBLY AND DURABLY MARKED TO INDICATE ITS PURPOSE UNLESS SUCH PURPOSE IS CLEARLY EVIDENT (CFC-605.3.1).
16. ALL WORK SHALL MEET THE LATEST ADOPTED ADDITIONS OF THE CALIFORNIA CODE OF REGULATIONS, TITLE 24 AND ALL OTHER APPLICABLE REGULATIONS, WHICH INCLUDE:

CALIFORNIA BUILDING CODE	2022
CALIFORNIA ELECTRICAL CODE	2022
NON RESIDENTIAL CEC ENERGY STANDARDS	2022

17. PROVIDE THE MAIN SERVICE EQUIPMENT ROOM EGRESS DOOR, WITH THE REQUIRED DIRECTION OF THE DOOR SWING AND THE REQUIRED DOOR HARDWARE. ART.110.26(C)(3).
18. PROVIDE ARC-FAULT PROTECTION FOR ALL REQUIRED CIRCUITS AS PER ART. 210.12 (CEC).

SYMBOL SCHEDULE

SYMBOL	NAME	DESCRIPTION
U.O.N.	UNLESS OTHERWISE NOTED	
GFCI	GROUND FAULT CIRCUIT INTERRUPTER	
A 50	FIXTURE TYPE "A" AND WATTAGE "50"	REFER TO FIXTURE SCHEDULE
	SITE POLE LIGHT FIXTURE (TWO HEAD)	REFER TO FIXTURE SCHEDULE
	SITE LIGHT, ONE HEAD	REFER TO FIXTURE SCHEDULE
	2X4 LIGHT FIXTURE	REFER TO FIXTURE SCHEDULE
EM	LIGHT FIXTURE ON EMERGENCY CKT. OR EQUIPMENT ON BATTERY BACKUP	REFER TO FIXTURE SCHEDULE
	2X2 LIGHT FIXTURE	REFER TO FIXTURE SCHEDULE
	LIGHT FIXTURE	REFER TO FIXTURE SCHEDULE
	6"X4 LIGHT FIXTURE	REFER TO FIXTURE SCHEDULE
	PENDANT LIGHT FIXTURE	REFER TO FIXTURE SCHEDULE
	STRIP LIGHT OR INDUSTRIAL LIGHT FIXTURE	REFER TO FIXTURE SCHEDULE
	RECESSED DOWN LIGHTING FIXTURE	REFER TO FIXTURE SCHEDULE
	ILLUMINATED EXIT SIGN, WALL MOUNT	REFER TO FIXTURE SCHEDULE
	EMERGENCY LIGHT	REFER TO FIXTURE SCHEDULE
	OCCUPANCY SENSOR SWITCHPACK	
	WALL SWITCH @+44" MAX. TO TOP OF BOX, REFER TO CBC 2022 SECTION 11B-308	AC QUIET TYPE, 20A, 277V
OV	LIGHTING CONTROL MANUAL OVERRIDE SWITCH	ABL -nLIGHT
MCN	WALL CONTROL, ON/OFF ONLY. NOT ACCESSIBLE TO UNAUTHORIZED PERSONNEL	ABL -nLIGHT
MC	WALL MOTION DIMMER SWITCH, PARTIAL ON BETWEEN 50% AND 70%	ABL -nLIGHT
MC	WALL MOTION DIMMER SWITCH ON / OFF + RAISE / LOWER	ABL -nLIGHT
	WALL CONTROL SWITCH, ON/OFF ONLY	ABL -nLIGHT
N	WALL CONTROL, ON/OFF ONLY. NOT ACCESSIBLE TO UNAUTHORIZED PERSONNEL	ABL -nLIGHT
	OCCUPANCY MOTION SENSOR, INSTALL AT 48" MIN FROM AIR REGISTER	ABL -nLIGHT
W	WALL SWITCH WITH INTEGRAL OCCUPANCY SENSOR @ +44" TO TOP OF BOX, U.O.N.	ABL -SENSOR SWITCH
N	OCCUPANCY SENSOR, CEILING MOUNTED - NETWORK	ABL -nLIGHT
a,b	PHOTO SENSOR - 3 ZONE (LOWER CASE LETTER INDICATES CONTROL GROUP)	ABL -nLIGHT
	POWER PACK 0-10V DIMMING	ABL -nLIGHT
	POWER PACK LINE VOLTAGE DIMMING	ABL -nLIGHT
	PLUG LOAD CONTROLLER	ABL -nLIGHT
	DUPLEX CONVENIENCE OUTLET MOUNTED @ 15" MIN.	20A SPECIFICATION GRADE, NEMA GROUNDED
WP	WEATHERPROOF CONVENIENCE OUTLET MOUNTED @ 15" MIN.	20A SPECIFICATION GRADE, NEMA GROUNDED
	DUPLEX CONVENIENCE OUTLET HOSPITAL GRADE RED MOUNTED @ 15" MIN. BOTTOM OF BOX, REFER TO CBC 2022 SECTION 11B-308.	
	QUADPLEX CONVENIENCE OUTLET MOUNTED @ +15" MIN.	20A SPECIFICATION GRADE, NEMA GROUNDED
	QUADPLEX OUTLET WITH ONE CONTROLLED OUTLET MOUNTED @ +15" MIN TO BOTTOM OF BOX.	
	JUNCTION BOX - AS REQUIRED	4" SQUARE BOX & FLUSH PLATE MINIMUM
	COMMUNICATIONS / DATA OUTLET @ +15" AFF MIN. BOTTOM OF BOX. +44" MAX TOP OF BOX U.O.N.	4 11/16" x 2 1/8"D BOX W/ 1 1/2" 2 GANG EXTENSION RING, (2) 1"C STUBS TO ACCESSIBLE ATTIC SPACE. # INDICATES DROPS. ONE MINIMUM
	SPECIAL OUTLET	20A SPECIFICATION GRADE, NEMA GROUNDED
	FLOOR BOX OUTLET	20A SPECIFICATION GRADE, NEMA GROUNDED
	ELECTRICAL SWITCHBOARD	REFER TO SINGLE LINE DIAGRAM
	TRANSFORMER	REFER TO SINGLE LINE DIAGRAM
	ELECTRICAL PANEL FLUSH MOUNT	REFER TO PANEL SCHEDULE
	ELECTRICAL PANEL SURFACE MOUNTED	REFER TO PANEL SCHEDULE
	TERMINAL CABINET SURFACE MOUNTED	24"W x 6"D x 36"H WITH DIVIDER AT 8" FOR FIRE ALARM
	PULL BOX	REFER TO SITE PLAN
	EXHAUST FAN	REFER TO MECHANICAL PLANS & SPECIFICATIONS
	MOTOR	**REFER TO MECHANICAL PLANS & SPECIFICATIONS**
WP	FUSED DISCONNECT SWITCH WEATHERPROOF	
	120V RELAY WITH 277V COIL	SIZED TO HANDLE EXHAUST FAN LOUD
	WIRING BELOW GRADE	3/4" CONDUIT MINIMUM, REFER TO SPECIFICATIONS
	WIRING IN WALL OR CEILING	3/4" CONDUIT MINIMUM, REFER TO SPECIFICATIONS
	CONDUIT RISER	3/4" CONDUIT MINIMUM, REFER TO SPECIFICATIONS
	CONDUIT STUB AND CAP	3/4" CONDUIT MINIMUM, REFER TO SPECIFICATIONS
#10	HOME RUN (TO PANEL "A", CIRCUIT "15")	3/4" CONDUIT MINIMUM, REFER TO SPECIFICATIONS
10V	3/4"C WITH 0-10V DIMMING CONDUCTORS .	
	NEUTRAL	
	NUMBER OF HASH MARKS DENOTES QUANTITY OF CONDUCTORS. NO MULTI-WIRE BRANCH CIRCUITS. HOT	

ELECTRICAL SITE PLAN

Highland High School

SCALE : 1" = 20'-0"

0 10' 20' 30' 40' 60'

TRUE NORTH

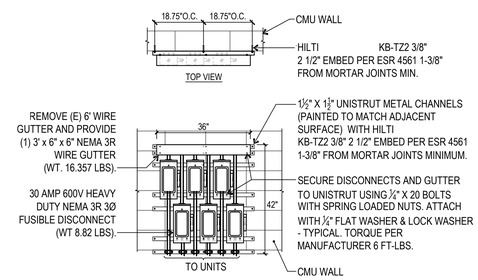

WIRE GUTTER DETAIL

SCALE: 1"=1'-0" (2 / E1.00)

-

NOTE:

THE CALIFORNIA STATE LICENSE BOARD (CSLB) "ZERO TOLERANCE POLICY" IN EFFECT FOR NON COMPLIANT ELECTRICIANS. IN CALIFORNIA, ELECTRICAL WORK SHALL ONLY BE DONE BY "STATE CERTIFIED ELECTRICIANS". LABOR CODE SECTIONS 108.2, SECTIONS 209.0 AND THE AB 931, AS OF JANUARY 2006, ENFORCEMENT OF LEGAL ACTION WILL BE ISSUED TO ANY C-10 CONTRACTOR WHO WILLFULLY EMPLOYES AN "UNCERTIFIED ELECTRICIAN" TO PERFORM ELECTRICAL WORK IN THE STATE OF CALIFORNIA. AN INDENTURED APPRENTICE OR A STATE REGISTERED ELECTRICIAN (AKA TRAINEE) MAY PERFORM ELECTRICAL WORK IF UNDER THE "DIRECT SUPERVISION" OF A "STATE CERTIFIED ELECTRICIAN."

IDENTIFICATION STAMP
DIV. OF THE STATE ARCHITECT
APP: 03-122528 INC:
REVIEWED FOR
SS ☑ FLS ☑ ACS ☑
DATE: 01/06/2025

PTN : 63529-385 FILE: 15-H3

HIGHLAND HIGH SCHOOL
CAFETERIA REHABILITATION AND MODERNIZATION
2900 ROYAL SCOTS WAY
FOR
KERN HIGH SCHOOL DISTRICT
BAKERSFIELD, KERN COUNTY, CALIFORNIA

ARCHITECT S inc.
1601 NEW STINE ROAD, SUITE 280
BAKERSFIELD, CA 93309
PH: (661) 397-4377
FAX: (661) 397-4378
WWW.SCARCHITECT.CON
LICENSED ARCHITECT STEPHEN J. CORBIN
STEPHEN J. CORBIN, NCARB, AIA, LEED ®-AP

CHECK AND VERIFY ALL DIMENSIONS BEFORE PROCEEDING WITH THE WORK. REPORT DISCREPANCIES TO THE ARCHITECT. ALL CONSTRUCTION SHALL CONFORM TO THE C.B.C.

DPG
Engineering Inc.
6702 N. Cedar Suite 205
Fresno, Ca. 93710
Ph: (559) 276-5144
Fax (559) 900-4929
Email @ dpgengineering.com
REGISTERED PROFESSIONAL ENGINEER DAVID P. GOTT STATE OF CALIFORNIA ELECTRICAL

ELECTRICAL SITE PLAN SYMBOL LEGEND AND NOTES

MARK	DATE	REVISIONS
1		
2		
3		

JOB NO.	1319
DRAWN :	R.L.M.
CHECKED :	D.P.G.
DATE :	4/2/24

1.00 OF SHEETS

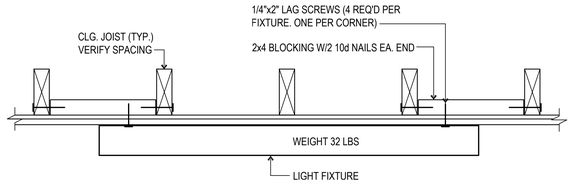

TYPICAL FIXTURE MOUNTING DETAIL

NOT TO SCALE (2 / E1.10)

FEEDER SCHEDULE

AMPS	CONDUIT AND CONDUCTORS (THHN/THWN CU)						GROUNDING
	PVC, EMT OR GRS	1Ø 3W (13)	3Ø 3W (33)	3Ø 4W (34)	3Ø 5W (35)	NYLON PULL LINE (NPL)	(THHN/THWN) COPPER PER CONDUIT
30	3/4"	3 #10	3 #10	4 #10	NA	1	#10
40	3/4"	3 #8	3 #8	4 #8			#10
50	1"	3 #6	3 #6	4 #6			#10
60	1"	3 #6	3 #6	4 #6			#10
70	1 1/4"	3 #4	3 #4	4 #4			#8
80	1 1/4"	3 #3	3 #3	4 #3			#8
90	1 1/4"	3 #2	3 #2	4 #2			#6
100	1 1/2"	3 #1	3 #1	4 #1	5 #1		#6
125	1 1/2"	3 #1	3 #1	4 #1	5 #1		#6
150	2"	3 #1/0	3 #1/0	4 #1/0	5 #1/0		#6
175	2"	3 #2/0	3 #2/0	4 #2/0	5 #2/0		#4
200	2"	3 #3/0	3 #3/0	4 #3/0	—		#4
225	2 1/2"	3 #4/0	3 #4/0	4 #4/0	5 #4/0		#2
250	3"	3 #250 Kcmil	3 #250 Kcmil	4 #250 Kcmil	5 #250 Kcmil		#2
300	3 1/2"	3 #350 Kcmil	3 #350 Kcmil	4 #350 Kcmil	5 #350 Kcmil		#2
400	4"	3 #600 Kcmil	3 #600 Kcmil	4 #600 Kcmil	5 #600 Kcmil		#1/0
500	(2)3"	3 #250 Kcmil (EA)	3 #250 Kcmil (EA)	4 #250 Kcmil (EA)	5 #250 Kcmil (EA)		#2/0
600	(2)3 1/2"	3 #350 Kcmil (EA)	3 #350 Kcmil (EA)	4 #350 Kcmil (EA)	5 #350 Kcmil (EA)		#2/0
700	(2)4"	3 #500 Kcmil (EA)	3 #500 Kcmil (EA)	4 #500 Kcmil (EA)	5 #500 Kcmil (EA)		#2/0
800	(2)4"	3 #600 Kcmil (EA)	3 #600 Kcmil (EA)	4 #600 Kcmil (EA)	5 #600 Kcmil (EA)		#2/0
1000	(3)3 1/2"	3 #400 Kcmil (EA)	3 #400 Kcmil (EA)	4 #400 Kcmil (EA)	5 #400 Kcmil (EA)		#3/0
1200	(4)3 1/2"	3 #350 Kcmil (EA)	3 #350 Kcmil (EA)	4 #350 Kcmil (EA)	5 #350 Kcmil (EA)		#3/0
1600	(4)4"	3 #600 Kcmil (EA)	3 #600 Kcmil (EA)	4 #600 Kcmil (EA)	5 #600 Kcmil (EA)		#4/0
2000	(5)4"	3 #600 Kcmil (EA)	3 #600 Kcmil (EA)	4 #600 Kcmil (EA)	5 #600 Kcmil (EA)		#4/0

2000,3S — FEEDER AMPS; CONDUCTOR TYPE (3Ø 5W)

NOTE:
3Ø 5W FEEDERS ARE ØA, ØB, ØC AND TWO NEUTRAL CONDUCTORS FOR NON-LINEAR LOAD APPLICATIONS.

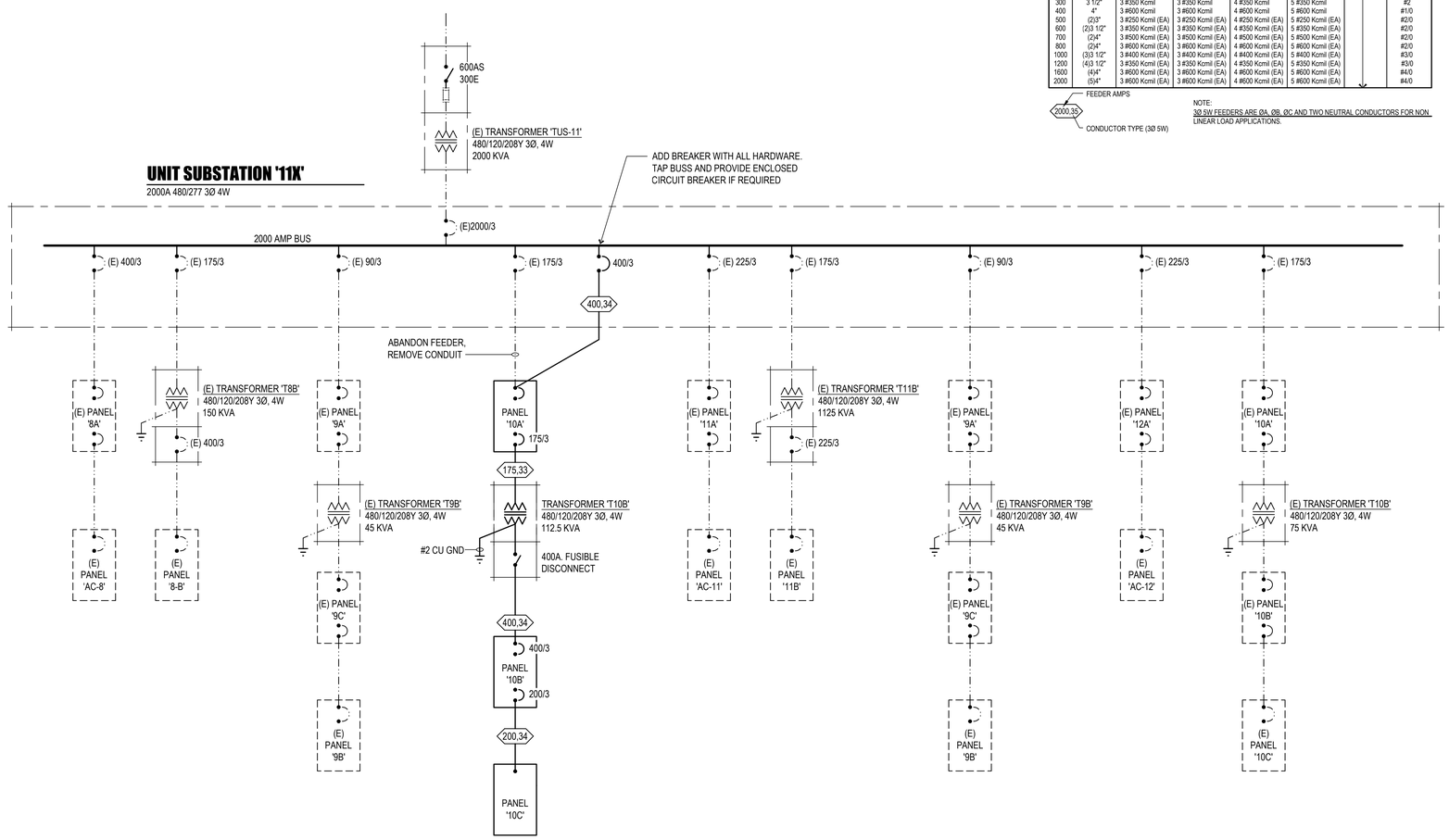

ELECTRICAL SINGLE LINE DIAGRAM

NOT TO SCALE (1 / E1.10)

IDENTIFICATION STAMP
DIV. OF THE STATE ARCHITECT
APP: 03-122528 INC:
REVIEWED FOR
SS ☑ FLS ☑ ACS ☑
DATE: 01/06/2025

PTN : 63529-385 FILE: 15-H3

HIGHLAND HIGH SCHOOL
CAFETERIA REHABILITATION AND MODERNIZATION
2900 ROYAL SCOTS WAY
FOR
KERN HIGH SCHOOL DISTRICT
BAKERSFIELD, KERN COUNTY, CALIFORNIA

ARCHITECT inc.
1601 NEW STINE ROAD, SUITE 280
BAKERSFIELD, CA 93309
PH: (661) 397-4377
FAX: (661) 397-4378
WWW.SCARCHITECT.COM

LICENSED ARCHITECT STEPHEN J. CORBIN No. 16788 REGISTERED PROFESSIONAL ENGINEER CIVIL STATE OF CALIFORNIA

STEPHEN J. CORBIN, NCARB, AIA, LEED ®.AP

CHECK AND VERIFY ALL DIMENSIONS BEFORE PROCEEDING WITH THE WORK. REPORT DISCREPANCIES TO THE ARCHITECT. ALL CONSTRUCTION SHALL CONFORM TO THE C.B.C.

DPG Engineering Inc.
6702 N. Cedar Suite 205
Fresno, Ca. 93710
Ph: (559) 276-5144
Fax (559) 900-4929
Email @ dpgengineering.com

REGISTERED PROFESSIONAL ENGINEER DAVID P. GOLTZ No. 18251 ELECTRICAL STATE OF CALIFORNIA

ELECTRICAL SINGLE LINE DIAGRAM AND FEEDER SCHEDULE

MARK	DATE	REVISIONS
1		
2		
3		

JOB NO. 1319
DRAWN : R.L.M.
CHECKED : D.P.G.
DATE : 4/2/24

1.10 OF SHEETS

PANEL '10-A'

VOLTAGE: **277/480 VOLT 3 PHASE 4 W**
BUS RATING: **400A CU**
FEEDER: **REFER TO SINGLE LINE DIAGRAM**
MAIN: **400/3**
BREAKER STYLE: **BOLT ON**
MTG STYLE: **FLUSH**

CT #	VA LOAD PER PHASE A	B	C	LOAD DESCRIPTION	LOAD TYPE LT	RC	HT	MO	MS	CB		CB	LOAD TYPE LT	RC	HT	MO	MS	LOAD DESCRIPTION	VA LOAD PER PHASE A	B	C	CT #
1	8587			HP-1				1		40	a	20					1	ERV-1	2742			2
3		8587		----------				1		-	b	-					1	----------		2742		4
5			8587	----------				1		3	c	3					1	----------			2742	6
7	8587			HP-2				1		40	a							SPACE				8
9		8587		----------				1		-	b							SPACE				10
11			8587	----------				1		3	c							SPACE				12
13				SPACE							a							SPACE				14
15				SPACE							b							SPACE				16
17				SPACE							c							SPACE				18
19	10498			AC-1				1		50	a							SPACE				20
21		10498		----------				1		-	b							SPACE				22
23			10498	----------				1		3	c							SPACE				24
25	1330			MUA-1				1		20	a							SPACE				26
27		1330		----------				1		-	b							SPACE				28
29			1330	----------				1		3	c							SPACE				30
31	1191			KEF-1				1		20	a							SPACE				32
33		1191		----------				1		-	b							SPACE				34
35			1191	----------				1		3	c	20	1					LIGHTING			880	36
37	49394			112.5 KVA TRANSF T10B *						175	a	20	1					LIGHTING	1485			38
39		54986		----------						-	b	20	1					LIGHTING		1466		40
41			54584	----------						3	c	20	1					LIGHTING			1420	42
	79587	85179	84777	SUB TOTAL														SUB TOTAL	4227	4208	5042	

LOAD SUMMARY BY TYPE	CONNECTED	DEMAND FACTOR	DEMAND
LIGHTING:	5251	125%	6563.75
RECEPTACLES:	0	100%	0
HEAT	0	100%	0
HVAC AND MOTORS:	98807.1	100%	98807.1
MISCELLANEOUS	0	100%	0

TOTAL VA	83815	89388	89820
CONNECTED AMPS	303	323	324

* CIRCUIT BREAKER FOR T10B SHALL BE SUB FEED TYPE

PANEL '10-B'

VOLTAGE: **120/208 VOLT 3 PHASE 4 W**
BUS RATING: **400A CU**
FEEDER: **REFER TO SINGLE LINE DIAGRAM**
MAIN: **400/3**
BREAKER STYLE: **BOLT ON**
MTG STYLE: **FLUSH**

CT #	VA LOAD PER PHASE A	B	C	LOAD DESCRIPTION	LOAD TYPE LT	RC	KT	MO	MS	CB		CB	LOAD TYPE LT	RC	KT	MO	MS	LOAD DESCRIPTION	VA LOAD PER PHASE A	B	C	CT #
1	162			SOFFIT LIGHTING	1					20	a	30			1			ITEM A42	3192			2
3		162		SOFFIT LIGHTING	1					20	b	-			1			----------		3192		4
5			1800	HEAT TRACE TAPE					1	20	c	3			1			----------			3192	6
7	1800			HEAT TRACE TAPE					1	20	a							SPARE				8
9		6420		ITEM 233			1			60	b	20		1				EX RECEPTACLES		1500		10
11			6420	----------			1			-	c	20		1				EX RECEPTACLES			1500	12
13	6420			----------			1			3	a	20		1				EX RECEPTACLES	1500			14
15		624		(2) ITEM A1			1			20	b	20			1			ITEM A6		1920		16
17			1440	ITEM A3			1			20	c	20			1			ITEM A7			1500	18
19	1440			ITEM A4			1			20	a	20			1			ITEM A13	720			20
21		1920		ITEM A6			1			20	b	20			1			ITEM A16		1080		22
23			1500	ITEM A7			1			20	c	20			1			ITEM A5			720	24
25	720			ITEM 25			1			20	a	20			1			ITEM A4	1440			26
27		2400		ITEM A8			1			20	b	20			1			ITEM A17		1236		28
29			2400	----------			1			2	c	20			1			ITEM A21			828	30
31	2400			ITEM A8			1			20	a	20			1			ITEM A33	720			32
33		2400		----------			1			2	b	20			1			ITEM A4		1440		34
35			2400	ITEM A8			1			20	c	20			1			ITEM A23			720	36
37	2400			----------			1			2	a	20			1			ITEM A23	720			38
39		2400		ITEM A8			1			20	b	20			1			ITEM A23		720		40
41			2400	----------			1			2	c	20			1			HVAC CONTROL			1440	42
43	900			ITEM A11			1			20	a	20			1			ITEM A24	1920			44
45		1500		ITEM A7			1			20	b	20			1			ITEM A28		1776		46
47			1920	ITEM A6			1			20	c	20			1			ITEM A28			1776	48
49	1500			ITEM A7			1			20	a	20			1			ITEM A28	1776			50
51		720		ITEM A12			1			20	b	20			1			ITEM A28		1776		52
53			900	ITEM A11			1			20	c	20			1			ITEM A27			1920	54
55	18944			SUB FEED PANEL '10-C'						200	a	20			1			ITEM A35	720			56
57		20600		----------						-	b	20			1			DCV & ANSUL SYSTEM		1200		58
59			19400	----------						3	c	20			1			ITEM 32			408	60
	36686	39146	40580	SUB TOTAL														SUB TOTAL	12708	15840	14004	

LOAD SUMMARY BY TYPE	CONNECTED	DEMAND FACTOR	DEMAND
LIGHTING:	324	125%	405
RECEPTACLES:	4500	100%	4500
KITCHEN	91596	100%	91596
HVAC AND MOTORS:	0	100%	0
MISCELLANEOUS:	3600	100%	3600

TOTAL VA	49394	54986	54584
CONNECTED AMPS	412	458	455

* CIRCUIT BREAKER FOR 10C SHALL BE SUB FEED TYPE.
SEE LOAD CALC

PANEL '10-C'

VOLTAGE: **120/208 VOLT 3 PHASE 4 W**
BUS RATING: **200A CU**
FEEDER: **REFER TO SINGLE LINE DIAGRAM**
MAIN: **MLO**
BREAKER STYLE: **BOLT ON**
MTG STYLE: **FLUSH**

CT #	VA LOAD PER PHASE A	B	C	LOAD DESCRIPTION	LOAD TYPE LT	RC	KT	MO	MS	CB		CB	LOAD TYPE LT	RC	KT	MO	MS	LOAD DESCRIPTION	VA LOAD PER PHASE A	B	C	CT #
1	192			CP					1	20	a	20		1				EDF-1	720			2
3		600		WH					1	20	b	20			1			ITEM A67		2160		4
5			1500	ITEM A48						20	c	20			1			ITEM A63			1200	6
7	1500			----------						2	a	20			1			ITEM A58	1560			8
9				SPARE						20	b	20			1			ITEM A62		720		10
11			500	EX 1/2 HP SUMP PUMP					1	20	c	20			1			ITEM A57			1236	12
13	720			ITEM A51			1			20	a	20		1				LOUNGE	1200			14
15		2160		ITEM A67			1			20	b	20		1				LOUNGE		1200		16
17			240	ITEM A54.2			1			20	c	20		1				RECEPTACLES			1080	18
19	240			----------			1			2	a	20		1				OFFICE	1080			20
21				SPACE			1			20	b	20		1				RECEPTACLES		900		22
23			240	ITEM A54.1			1			20	c	20		1				RECEPTACLES			720	24
25	240			----------			1			2	a	20					1	EF-1	696			26
27				SPACE			1			20	b	20					1	FC 1-1		888		28
29				SPARE			1			20	c	2					1	----------			888	30
31	240			ITEM A64.2			1			20	a	20					1	FC 1-2	684			32
33		240		----------			1			2	b	2					1	----------		684		34
35			1920	ITEM A4.1			1			20	c	20					1	FC 2-1			888	36
37	240			ITEM A64.1			1			20	a	2					1	----------	888			38
39		240		----------			1			2	b	20					1	FC 2-2		684		40
41			1620	ITEM A22			1			20	c	2					1	----------			684	42
43	1620			----------			1			2	a	20				1		ITEM 54	1440			44
45		1272		ITEM A54.3				1		20	b	20				1		ITEM 64		1440		46
47			1272	----------				1		-	c	30					1	ITEM 64.3			2412	48
49	1272			----------				1		3	a	-					1	----------	2412			50
51		3000		HP-3				1		40	b	3					1	----------		2412		52
53			3000	----------				1		2	c	20						SPARE				54
55	2000			HAND DRYER					1	20	a	20						SPARE				56
57		2000		HAND DRYER					1	20	b	20						SPARE				58
59			2000	HAND DRYER					1	20	c	20						SPARE				60
	8264	9512	10292	SUB TOTAL														SUB TOTAL	10680	11088	9108	

LOAD SUMMARY BY TYPE	CONNECTED	DEMAND FACTOR	DEMAND
LIGHTING:	0	125%	0
RECEPTACLES:	6900	100%	6900
KITCHEN	16836	100%	16836
HVAC AND MOTORS:	24828	100%	24828
MISCELLANEOUS	7380	100%	7380

TOTAL VA	18944	20600	19400
CONNECTED AMPS	158	172	162

Fixture Schedule

Luminaire Name	Type Description	Lamp Type	Watts per fixture	Manufacturer	Model Number	Mounting	Weight and notes
A	10' DIAMETER PENDANT	LED	198	G LIGHTING	GL-2311-B-G-XXX-4-A-MOD(15,250LUM)	SUSPENDED	36 lbs. (6) #12 MIN HANGER WIRES TO UNDERSIDE OF STRUCTURE
A2	8' DIAMETER PENDANT	LED	162	G LIGHTING	GL-2310-B-G-XXX-4-A-MOD(12,000LUM)	SUSPENDED	28 lbs. (6) #12 MIN HANGER WIRES TO UNDERSIDE OF STRUCTURE
A3	6' DIAMETER PENDANT	LED	109	G LIGHTING	GL-2309-B-G-XXX-4-A	SUSPENDED	22 lbs. (4) #12 MIN HANGER WIRES TO UNDERSIDE OF STRUCTURE
A4	4' DIAMETER PENDANT	LED	77	G LIGHTING	GL-2307-B-G-XXX-4-A	SUSPENDED	14 lbs. (4) #12 MIN HANGER WIRES TO UNDERSIDE OF STRUCTURE
A5	3' DIAMETER PENDANT	LED	55	G LIGHTING	GL-2306-B-G-XXX-4-A	SUSPENDED	10 lbs. (4) #12 MIN HANGER WIRES TO UNDERSIDE OF STRUCTURE
B	2x4 LED FLAT PANEL	LED	40	ABL - LITHONIA	CPX 2X4 5000LM 80CRI 35K SVML MIN10 ZT MVOLT	T-Bar	17.25
Be	2x4 LED FLAT PANEL EMERGENCY BATTERY BACKUP	LED	40	ABL - LITHONIA	CPX 2X4 5000LM 80CRI 35K SVML MIN10 ZT MVOLT E10WLCP	T-Bar	19.75
BA	2x2 LED FLAT PANEL	LED	16	ABL - LITHONIA	CPX 2X2 2000LM 80CRI 35K SVML MIN10 ZT MVOLT	T-BAR	9.45
C	1 x 4 SURFACE VANDAL	LED	25	ABL - LITHONIA	VPF8 4FT NODIM 25W	SURFACE	30
Ce	1 x 4 SURFACE VANDAL EMERGENCY BATTERY BACKUP	LED	25	ABL - LITHONIA	VPF8 4FT NODIM 25W EMB310T20	SURFACE	32.5
D	2' WALL MOUNT	LED	17	ABL - LITHONIA	BLWP2 20L ADSM LP835	WALL	9
F	6" DOWNLIGHT	LED	11	ABL - LITHONIA	LDN6-40/10-L06WR-LSS MVOLT GZ10	CEILING	11
S	SURFACE SURCURITY	LED	18	EVERGREEN LTG	JMK 1W18 WHT CPC-VPF-40K	CEILING	12
EM	EMERGENCY BUGEYE CEILING/WALL MOUNT	LED	3	ABL - LITHONIA	ELM6L-UVOLT-LTP-SDRT	CEILING	3
X	Exit Combo	LED	4	ABL - LITHONIA	ECRG HO SQ	SURFACE	3.25
X1	EMERGENCY HEAD POWERED BY EXIT	LED	2	ABL-LITHONIA	ERE GY SGL WP SQ	WALL	0.65

REFER TO DETAIL 2/E1.10 FOR TYPE C AND Ce MOUNTING

ELECTRICAL LOAD CALCULATIONS
PANEL 10B

	VOLT AMPERE		VOLT AMPERE
LIGHTING @ 125%	3000		3750
RECEPTACLE 1ST 10,000 @ 100%	4500		10000
REMAINDER @ 50%			-2750
MECHANICAL EQUIPMENT @100%	0		0
KITCHEN EQUIPMENT @65%	90876		59069
MISC EQUIPMENT @ 100%	3600		3600
PANEL C @100%	48224		48224
TOTAL LOAD			121893
		339	Amps @ 208V 3 Phase
TOTAL LOAD		339	AMPS
		121.95	KVA

VOLTAGE DROP CALCULATIONS

VD (3 PHASE) = (1.73 * K * I * D) / CM	1.73	K	I	D	Wire Size	CM	VD	%@480	%@208			
PANEL 10 A	1.73	12	160	160	531456 500 Kcmil	500000	1.1	**0.2**	0.5			
PANEL 10 B	1.73	12	469	20	194729 500 Kcmil	500000	0.4	0.1	**0.2**			
PANEL 10 C	1.73	12	172	20	71414 3/0	167800	0.4	0.1	**0.2**			
AC-2	1.73	12	38	80	63110 #6	26420	2.4	**0.5**	1.1			

VD (1 PHASE) = (2 * K * I * D) / CM	2	K	I	D	CM	VD	%@480	%@208	%@120	%@277	%@230
LIGHTING CIRCUIT 10A-42	2	12	5	120	14400 12	6530	2.2	0.5	1.1	1.8	**0.8**	1.0
LIGHTING CIRCUIT 10A-40	2	12	5	70	8400 12	6530	1.3	0.3	0.6	1.1	**0.5**	0.6
RECEPTACLE CIRCUIT 10B-25	2	12	16	60	23040 12	6530	3.5	0.7	1.7	**2.9**	1.3	1.5
RECEPTACLE CIRCUIT 10B-45	2	12	13	60	18000 12	6530	2.8	0.6	1.3	**2.3**	1.0	1.2
RECEPTACLE CIRCUIT 10C-20	2	12	9	50	10800 12	6530	1.7	0.3	0.8	**1.4**	0.6	0.7

K = 12 COPPER loaded +50%
K = AL loaded +50%
D = DISTANCE
CM = CIRCULAR MILS
I = CURRENT

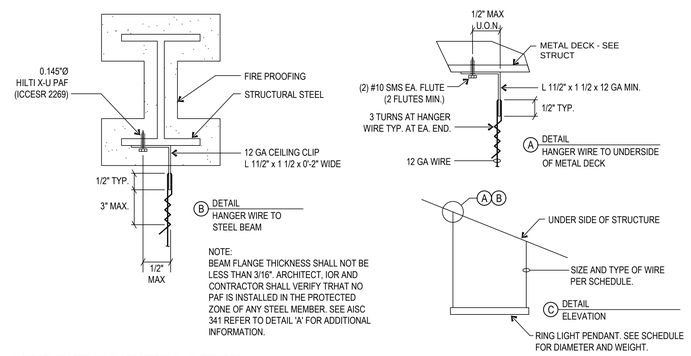

PENDANT MOUNTING DETAIL

NO SCALE (1 / E1.20)

IDENTIFICATION STAMP
DIV. OF THE STATE ARCHITECT
APP: 03-122528 INC:
REVIEWED FOR
SS ☑ FLS ☑ ACS ☑
DATE: 01/06/2025

PTN : 63529-385 FILE: 15-H3

HIGHLAND HIGH SCHOOL
CAFETERIA REHABILITATION AND MODERNIZATION
2900 ROYAL SCOTS WAY
FOR
KERN HIGH SCHOOL DISTRICT
BAKERSFIELD, KERN COUNTY, CALIFORNIA

SCARCHITECT inc.
1601 NEW STINE ROAD, SUITE 280
BAKERSFIELD, CA 93309
PH: (661) 397-4377
FAX: (661) 397-4378
WWW.SCARCHITECT.COM
STEPHEN J. CORBIN, NCARB, AIA, LEED ®-AP

CHECK AND VERIFY ALL DIMENSIONS BEFORE PROCEEDING WITH THE WORK. REPORT DISCREPANCIES TO THE ARCHITECT. ALL CONSTRUCTION SHALL CONFORM TO THE C.B.C.

DPG Engineering Inc.
6702 N. Cedar Suite 205
Fresno, Ca. 93710
Ph. (559) 276-5144
Fax (559) 903-4929
Email @ dpgengineering.com

SCHEDULES, CALCULATIONS AND DETAILS

MARK	DATE	REVISIONS
1		
2		
3		

JOB NO. 1319
DRAWN : R.L.M.
CHECKED : D.P.G.
DATE : 4/2/24

1.20 OF SHEETS

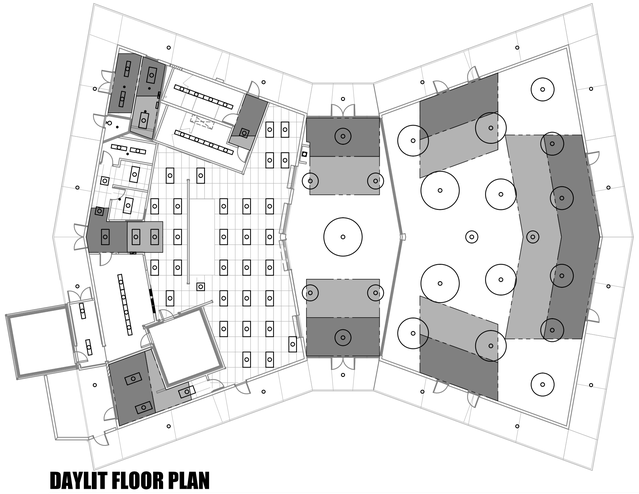

DAYLIT FLOOR PLAN

1/16"=1'-0" (2 / E-2.10)

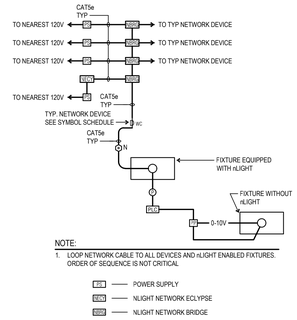

TYPICAL ZONE WIRING DIAGRAM

NOT TO SCALE (1 / E-2.10)

DAYLIT ZONE AREA REFERENCE	LIGHTING ZONE	
PRIMARY SIDELIT ZONE "P"	Z1	ZONE ONE
SECONDARY SIDELIT ZONE "S"	Z2	ZONE TWO

DEMOLITION NOTES REFER TO ARCHITECTURAL PLANS FOR ALL DEMO:

1. REMOVE AND/OR REROUTE AND RECONNECT ANY EXISTING CIRCUITS INTERRUPTED BY DEMOLITION WORK. ALL EXISTING EQUIPMENT THAT IS REMOVED SHALL BE RETURNED TO OWNER.
2. REMOVE AND/OR REROUTE AND RECONNECT ANY EXISTING ELECTRICAL WORK WHICH INTERFERES WITH NEW CONSTRUCTION AS REQUIRED.
3. ALL CONDUITS SHALL BE CONCEALED. WHERE SPECIFICALLY PERMITTED ON JOB, CONDUIT MAY BE RUN EXPOSED AND SHALL BE INSTALLED IN A MANNER TO THE SATISFACTION OF THE ARCHITECT.
4. ALL EXISTING DEVICES NOT TO BE REUSED IN WALLS OR LOCATED IN AREAS THAT WILL BECOME INACCESSIBLE SHALL BE ABANDONED. ALL EXISTING FLOOR BOXES NOT TO BE REUSED SHALL BE DISCONNECTED AND ABANDONED. REMOVE ALL CONDUCTORS
5. INSTALL NEW CONDUCTORS WHENEVER EXISTING OUTLET BOXES OR RACEWAYS ARE USED. DO NOT USE EXISTING CONDUCTORS. MINIMUM WIRE SIZE SHALL BE #12 AWG COPPER UNLESS OTHERWISE NOTED.
6. REMOVE CONDUCTORS FROM ANY ABANDONED RACEWAY, BACK TO NEAREST TERMINATION POINT.
7. COORDINATE REMOVAL OF EXISTING LIGHT FIXTURES, OUTLETS, PHONES, ETC., WITH ARCHITECTURAL PLAN.
8. REMOVE EXISTING OUTLET DEVICES AND PLATES REMAINING AND PROVIDE ALL NEW IN EXISTING BOXES AS REQUIRED.
9. COORDINATE WITH OWNER ALL DISRUPTION OF SCHOOL CLOCK, PROGRAM, FIRE ALARM, INTERCOM SYSTEMS AND POWER SERVICE. DISCONNECT AND REMOVE ANY SIGNAL SYSTEMS NOT TO BE USED.
10. ALL DEVICES, LIGHTING, ETC. IN WALLS AND CEILING TO BE DEMOLISHED SHALL BE DISCONNECTED AND REMOVED, WHETHER INDICATED OR NOT. FIELD VERIFY ALL CONDITIONS PRIOR TO BID.
11. CONTRACTOR SHALL PATCH TO MATCH ALL EXISTING SURFACES TO REMAIN WHICH MAY BE DAMAGED DURING ELECTRICAL DEMOLITION.
12. FLUSH OUT ALL EXISTING DEVICES TO NEW WALL FINISH. REMOVE AND REINSTALL ALL (E)SURFACE RACEWAYS. REFER TO ARCHITECTURAL DRAWINGS, FIELD VERIFY ALL CONDITIONS.
13. DISCONNECT AND REMOVE POWER POLES, SEE ARCHITECTURAL DEMO PLAN

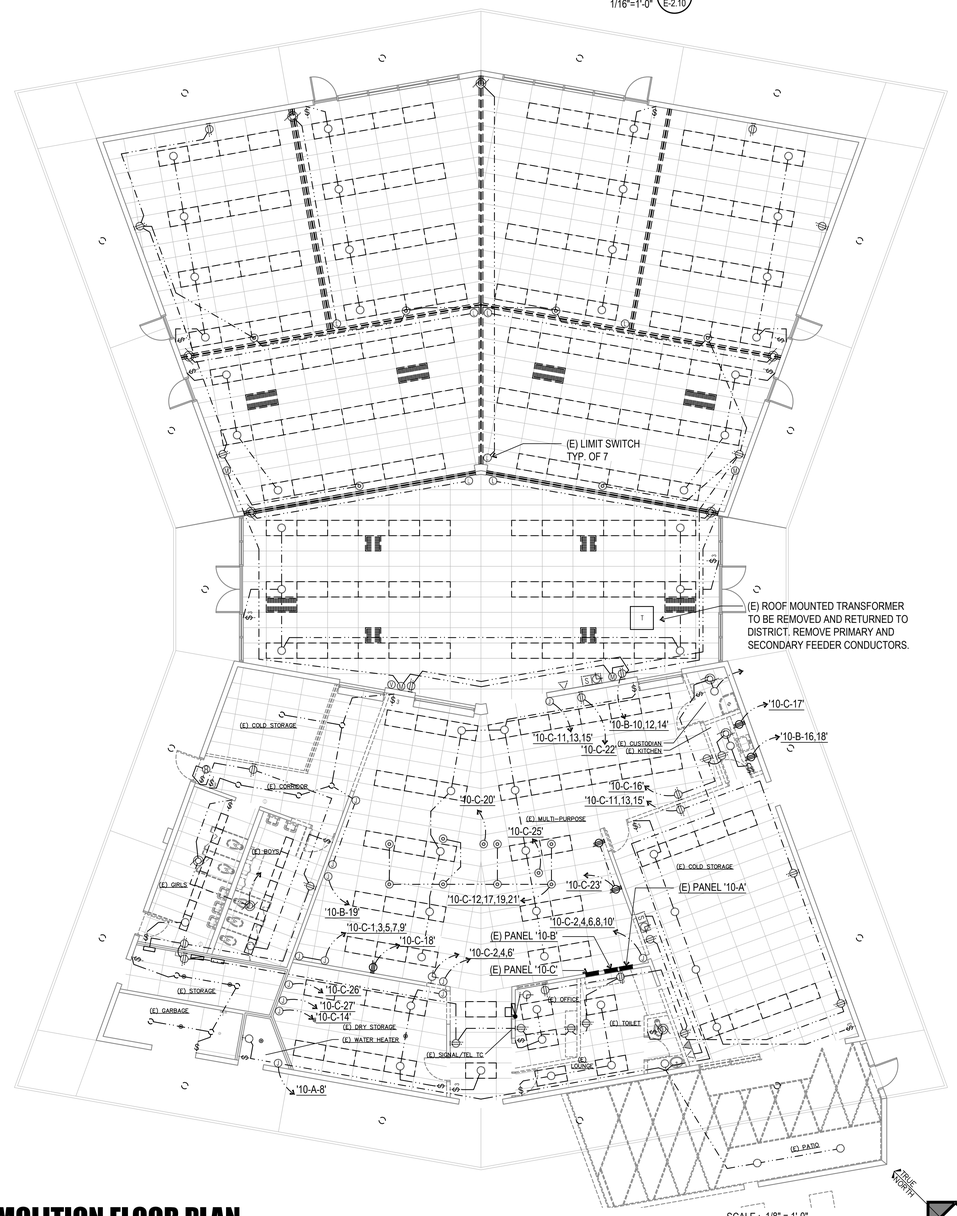

DEMOLITION FLOOR PLAN

UNIT 1000

SCALE : 1/8" = 1'-0"

0 4' 8' 12' 16' 24'

TRUE NORTH / PLAN NORTH

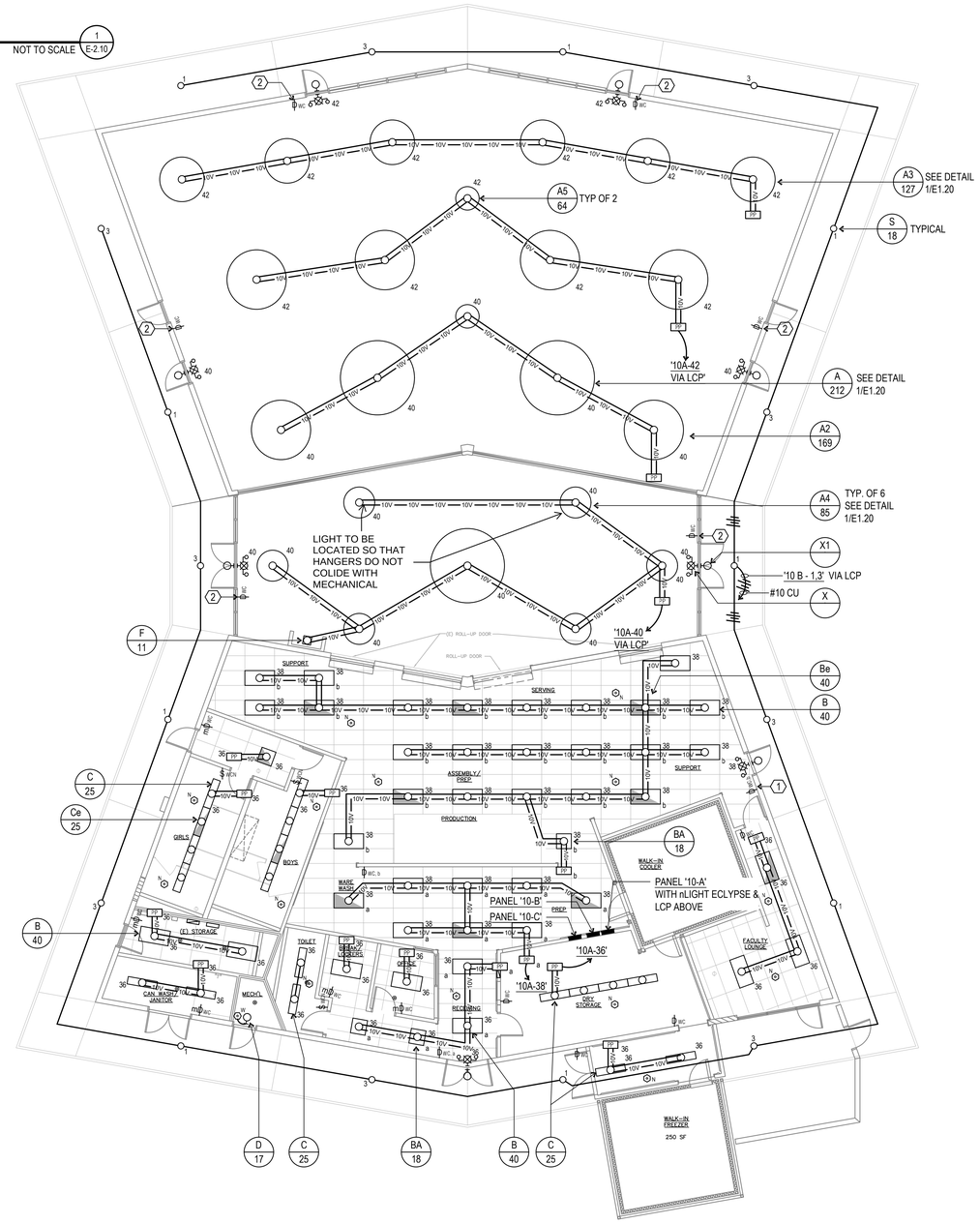

REFERENCE NOTES

1. UTILIZE WIREMOLD 700, PAINT TO MATCH
2. REMOVE EXISTING SWITCH AND CONDUCTORS. PROVIDE DIMMING WALL CONTROLLER

GENERAL NOTES

1. PROVIDE UNSWITCHED HOT CONDUCTOR TO EMERGENCY AND EXIT LIGHTING FIXTURES
2. ALL LIGHTING CIRCUITS SHALL BE #10 CU

LIGHTING FLOOR PLAN

UNIT 1000

SCALE : 1/8" = 1'-0"

0 4' 8' 12' 16' 24'

TRUE NORTH / PLAN NORTH

IDENTIFICATION STAMP
DIV. OF THE STATE ARCHITECT
APP: 03-122528 INC:
REVIEWED FOR
SS ☑ FLS ☑ ACS ☑
DATE: 01/06/2025

PTN : 63529-385 FILE: 15-H3

HIGHLAND HIGH SCHOOL

CAFETERIA REHABILITATION AND MODERNIZATION

2900 ROYAL SCOTS WAY
FOR
KERN HIGH SCHOOL DISTRICT
BAKERSFIELD, KERN COUNTY, CALIFORNIA

ARCHITECT inc.
1601 NEW STINE ROAD, SUITE 280
BAKERSFIELD, CA 93309
PH: (661) 397-4377
FAX: (661) 397-4378
WWW.SCARCHITECT.COM

LICENSED ARCHITECT STEPHEN J. CORBIN No. 16789 Exp. 11/30/25 CALIFORNIA

STEPHEN J. CORBIN, NCARB, AIA, LEED ®.AP

CHECK AND VERIFY ALL DIMENSIONS BEFORE PROCEEDING WITH THE WORK. REPORT DISCREPANCIES TO THE ARCHITECT. ALL CONSTRUCTION SHALL CONFORM TO THE C.B.C.

DPG Engineering Inc.
6702 N. Cedar Suite 205
Fresno, Ca. 93710
Ph: (559) 276-5144
Fax (559) 900-4929
Email @ dpgengineering.com

REGISTERED PROFESSIONAL ENGINEER DAYON P. GOTTSCHALK No. 18651 ELECTRICAL STATE OF CALIFORNIA

DEMOLITION PLAN, LIGHTING PLAN, DETAILS AND NOTES

MARK	DATE	REVISIONS
1		
2		
3		

JOB NO. 1319
DRAWN : R.L.M.
CHECKED : D.P.G.
DATE : 4/2/24

2.10 OF SHEETS

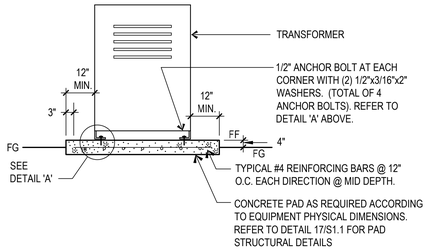

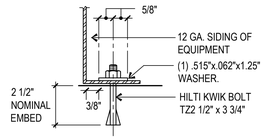

ICCS-ES (INTERNATIONAL CODE COUNCIL) ESR-4266

NOTE:
PERIODIC SPECIAL INSPECTION REQUIRED PER CBC SECTION 1705.1.1 AND TABLE 1705.3. TEST 50% OF ANCHORS USING A TORQUE WRENCH TO 40 FT-LBS. IF ANY ANCHOR FAILS, NOTIFY AOR/IOR.

XFMR #	WT	DIMENSIONS
T10B	974 LBS	31.3"W x 28.43"D x 37.52"H
-	-	-

TRANSFORMER MOUNTING DETAIL

NOT TO SCALE (1 / E2.20)

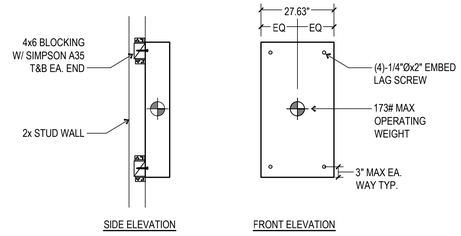

SECONDARY FUSIBLE DISCONNECT MOUNTING DETAIL

NOT TO SCALE (2 / E2.20)

REFERENCE NOTES

1. EXISTING PANEL TO BE REPLACED. REFER TO DETAIL 3/E2.20 FOR MOUNTING.
2. 1"C. 3#6 CU & 1#10 CU GND
3. POWER CONNECTION FOR HEAT TRACE TAPE. SEE PLUMBING
4. REFER TO DRAWING M 5.6 FOR LOCATION

GENERAL NOTES

1. ALL RECEPTACLES IN FOOD SERVICE AREA SHALL BE GFCI
2. REFER TO FOOD SERVICE PLANS SHEET QF400-5 FOR ALL ROUGH-IN REQUIREMENTS
3. ALL CIRCUITS UNDER THE HOOD SHALL BE ROUTED THROUGH CONTACTOR AND INTERCONNECTED TO FIRE SUPPRESSION SYSTEM TO SHUT DOWN UPON ACTIVATION OF FIRE SUPPRESSION SYSTEM. COORDINATE WITH M5.4
4. REFER TO CAPTIVE AIR AND MECHANICAL DRAWINGS FOR ALL REQUIREMENTS.

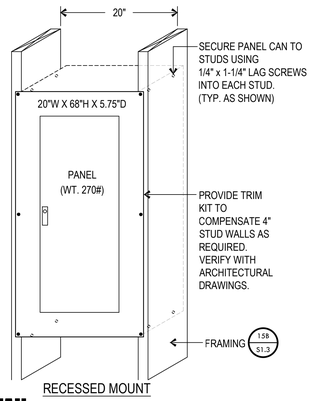

PANEL MOUNTING DETAIL

NOT TO SCALE (3 / E2.20)

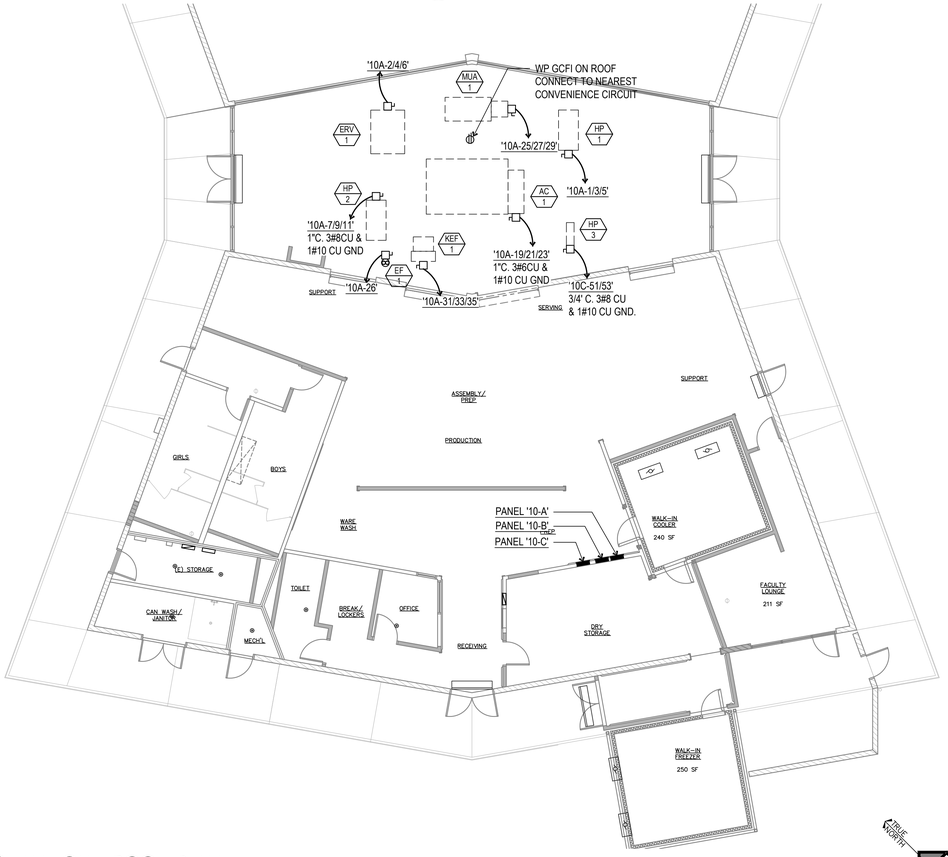

MECHANICAL ROOF PLAN

UNIT 1000

SCALE : 1/8" = 1'-0"

0 4' 8' 12' 16' 24'

TRUE NORTH / PLAN NORTH

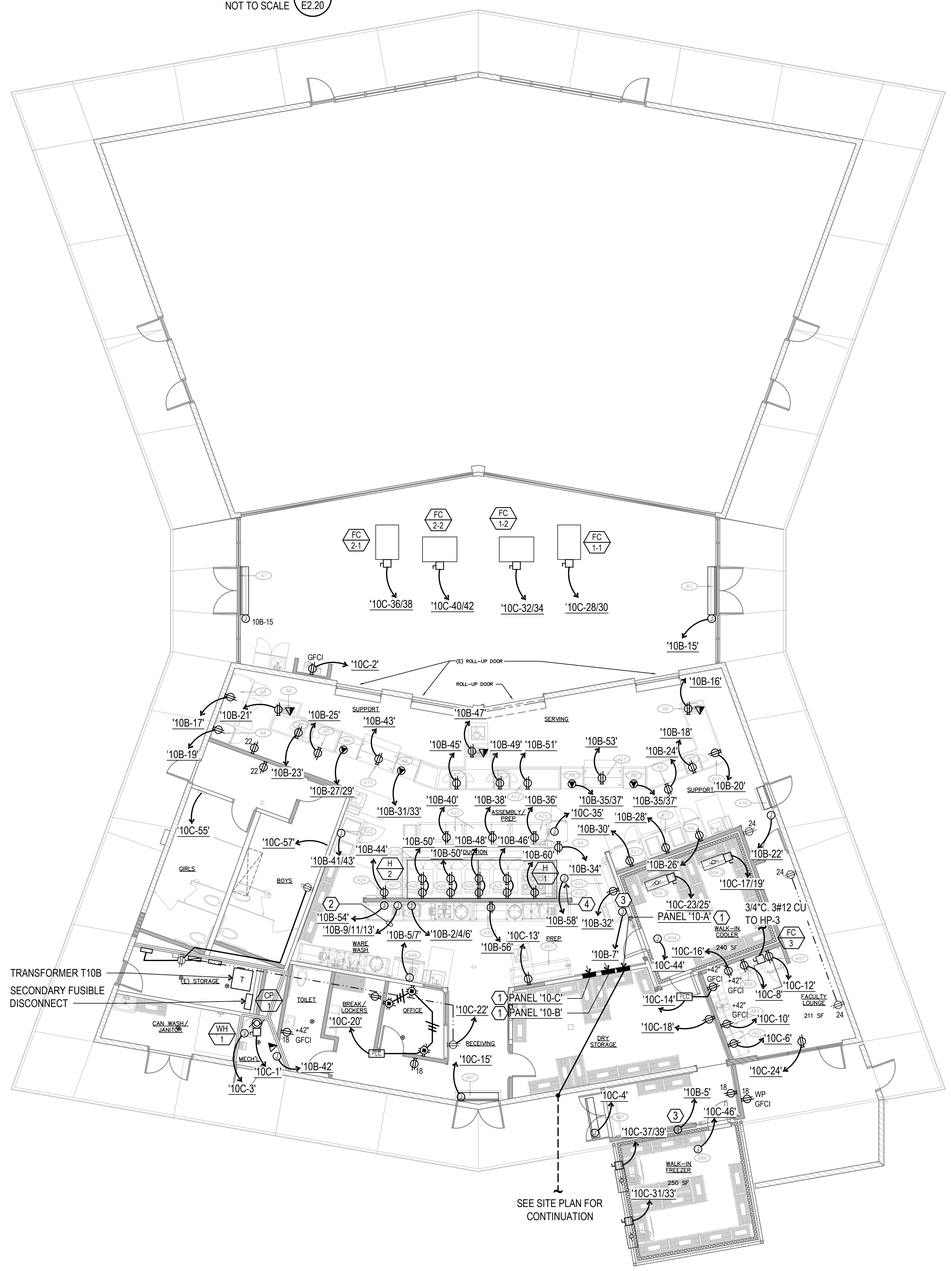

POWER FLOOR PLAN

UNIT 1000

SCALE : 1/8" = 1'-0"

0 4' 8' 12' 16' 24'

TRUE NORTH / PLAN NORTH

IDENTIFICATION STAMP
DIV. OF THE STATE ARCHITECT
APP: 03-122528 INC:
REVIEWED FOR
SS ☑ FLS ☑ ACS ☑
DATE: 01/06/2025

PTN : 63529-385 FILE: 15-H3

HIGHLAND HIGH SCHOOL
CAFETERIA REHABILITATION AND MODERNIZATION
2900 ROYAL SCOTS WAY
FOR
KERN HIGH SCHOOL DISTRICT
BAKERSFIELD, KERN COUNTY, CALIFORNIA

ARCHITECT inc.
1601 NEW STINE ROAD, SUITE 280
BAKERSFIELD, CA 93309
PH: (661) 397-4377
FAX: (661) 397-4378
WWW.SCARCHITECT.COM

STEPHEN J. CORBIN, NCARB, AIA, LEED ®, AP

CHECK AND VERIFY ALL DIMENSIONS BEFORE PROCEEDING WITH THE WORK. REPORT DISCREPANCIES TO THE ARCHITECT. ALL CONSTRUCTION SHALL CONFORM TO THE C.B.C.

DPG
Engineering Inc.
6702 N. Cedar Suite 205
Fresno, Ca. 93710
Ph: (559) 276-6144
Fax (559) 900-4929
Email @ dpgengineering.com

POWER & MECH POWER FLOOR PLANS, DETAILS AND NOTES

MARK	DATE	REVISIONS
1		
2		
3		

JOB NO. 1319
DRAWN : R.L.M.
CHECKED : D.P.G.
DATE : 4/2/24

2.20 OF SHEETS

FIRE ALARM SYMBOL SCHEDULE

SYMBOL	NAME	DESCRIPTION	CSFM #
(E)	EXISTING ITEM		
U.O.N.	UNLESS OTHERWISE NOTED		
FACP	FIRE ALARM CONTROL PANEL	NOTIFIER #NFS2-640	7165-0028:0243
FATC	FIRE ALARM TERMINAL CABINET		N/A
EVAC	FIRE ALARM VOICE EVACUATION AMPLIFIER WITH MICROPHONE	NOTIFIER #DVC-EM NOTIFIER #DAA 5070	7165-0028:0243 7165-0028:0243
EXP	FIRE ALARM EXPANDER	NOTIFIER #HPFF8	7315-1637:0102
MM	MONITOR MODULE	NOTIFIER #FMM-1	7300-0028:0219
CM	RELAY MODULE	NOTIFIER #FRM-1	7300-0028:0219
	HEAT DETECTOR W/ ADDRESSABLE BASE	NOTIFIER #FST-951 BASE #B300-6	7272-0028:0502 7300-1653:0109
A	ATTIC HEAT DETECTOR W/ ADDRESSABLE BASE	NOTIFIER #FST-951H BASE #B300-6	7272-0028:0502 7300-1653:0109
	PHOTOELECTRIC SMOKE DETECTOR W/ ADDRESSABLE BASE	NOTIFIER #FSP-951 BASE #B300-6	7272-0028:0503 7300-1653:0109
C WC	VISUAL DEVICE, CEILING MOUNTED C=CEILING MTD., (MC) = MULTI-CANDELA, SET PER PLANS	SYSTEM SENSOR #SCW-P	7125-1653:0186
W WC	VISUAL DEVICE, WALL MOUNTED W=CEILING MTD., (MC) = MULTI-CANDELA, SET PER PLANS	SYSTEM SENSOR #SCW-P	7125-1653:0186
C CC W	F.A. SPEAKER / STROBE. (CEILING MTD.) C=CEILING MTD., (MC) = MULTI-CANDELA, SET PER PLANS W = SPEAKER WATTAGE	SYSTEM SENSOR #SPSCW-P (SEE PLANS FOR SETTINGS)	7320-1653:0201
C CC W	F.A. SPEAKER / STROBE. (CEILING MTD.) C=CEILING MTD., (MC) = MULTI-CANDELA, SET PER PLANS W = SPEAKER WATTAGE	SYSTEM SENSOR #SPSCW-P (SEE PLANS FOR SETTINGS)	7320-1653:0201
S W	FIRE ALARM EXTERIOR SPEAKER. (WALL MTD.) W = SPEAKER WATTAGE	SYSTEM SENSOR #SPRK (SEE PLANS FOR SETTINGS)	7320-1653:0201
	END-OF-LINE RESISTOR	PER MANUFACTURER SPECIFICATION	
	WIRING UNDERGROUND OR IN WALL	3/4"C MIN U.O.N.	
	EXISTING CONDUIT TO REMAIN		

FIRE ALARM SITE PLAN

UNIT 1000

SCALE : 1" = 30'-0"

TRUE NORTH

PLAN NORTH

IDENTIFICATION STAMP
DIV. OF THE STATE ARCHITECT
APP: 03-122528 INC:
REVIEWED FOR
SS ☑ FLS ☑ ACS ☑
DATE: 01/06/2025

PTN : 63529-385 FILE: 15-H3

HIGHLAND HIGH SCHOOL
CAFETERIA REHABILITATION AND MODERNIZATION
2900 ROYAL SCOTS WAY
FOR
KERN HIGH SCHOOL DISTRICT
BAKERSFIELD, KERN COUNTY, CALIFORNIA

ARCHITECT inc.
1601 NEW STINE ROAD, SUITE 280
BAKERSFIELD, CA 93309
PH: (661) 397-4377
FAX: (661) 397-4378
WWW.SCARCHITECT.COM

STEPHEN J. CORBIN, NCARB, AIA, LEED ®-AP

CHECK AND VERIFY ALL DIMENSIONS BEFORE PROCEEDING WITH THE WORK. REPORT DISCREPANCIES TO THE ARCHITECT. ALL CONSTRUCTION SHALL CONFORM TO THE C.B.C.

DPG
Engineering Inc.
6702 N. Cedar Suite 205
Fresno, Ca. 93710
Ph: (559) 276-6144
Fax (559) 900-4929
Email @ dpgengineering.com

FIRE ALARM
SITE PLAN AND
SYMBOL LEGEND

MARK	DATE	REVISIONS
1		
2		
3		

JOB NO. 1319
DRAWN : R.L.M.
CHECKED : D.P.G.
DATE : 4/2/24

3.00 OF SHEETS

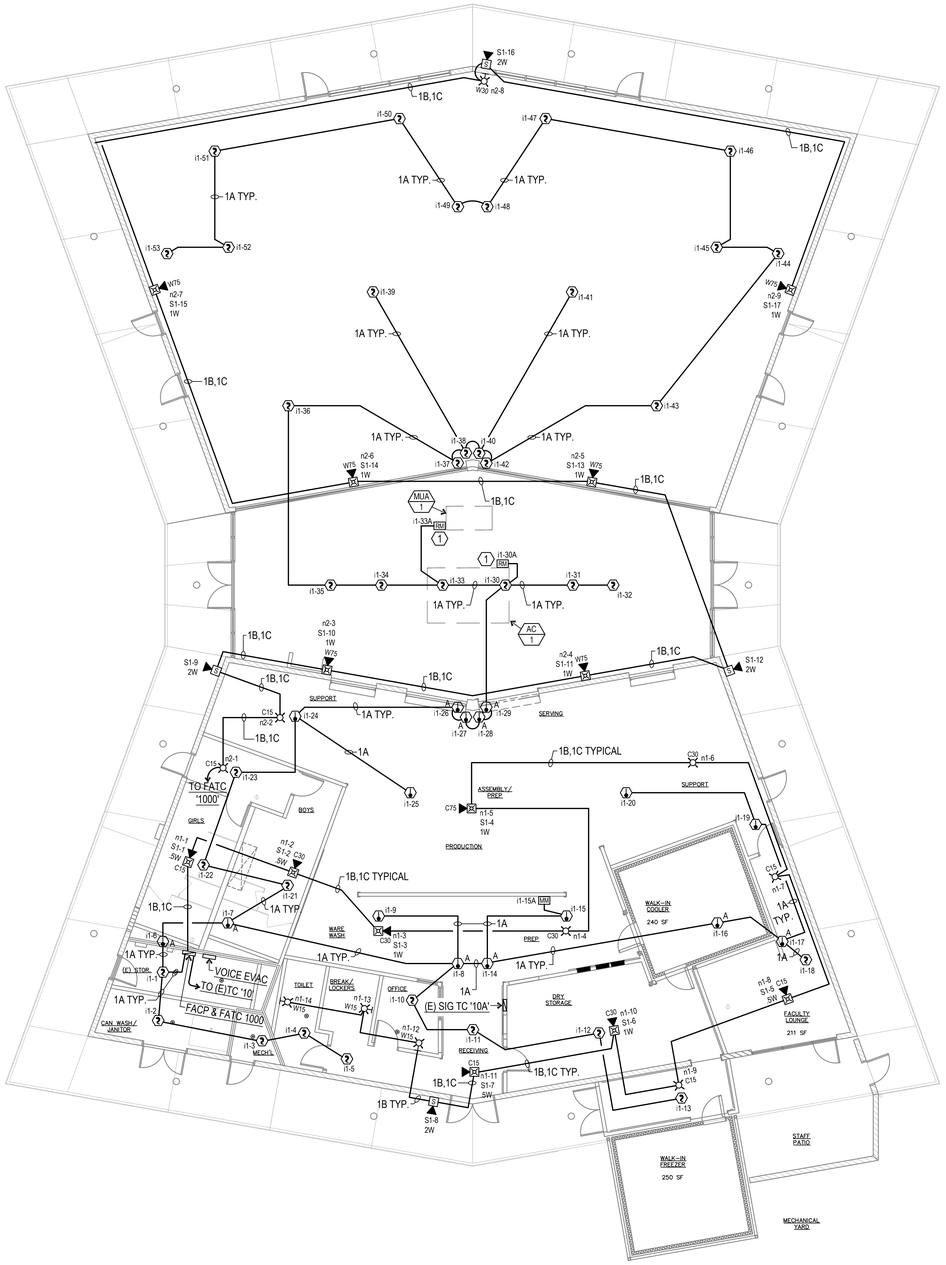

NOTE

TO AVOID NUISANCE TRIPPING, HEAT DETECTORS ARE PROVIDED IN KITCHEN AREA IN LIEU OF SMOKE DETECTORS PER EXCEPTION TO SECTION 907.2.3.6.1 OF THE 2022 CALIFORNIA FIRE CODE.

REFERENCE NOTES

1. PROVIDE RELAY MODULE AT MUA-1 & AC-1, FOR UNIT SHUT DOWN PER MECHANICAL DETAIL B/M1.0.

FIRE ALARM FLOOR PLAN

UNIT 1000

SCALE : 1/8" = 1'-0"

0 4' 8' 12' 16' 24'

TRUE NORTH

PLAN NORTH

IDENTIFICATION STAMP
DIV. OF THE STATE ARCHITECT
APP: 03-122528 INC:
REVIEWED FOR
SS ☑ FLS ☑ ACS ☑
DATE: 01/06/2025

PTN : 63529-385 FILE: 15-H3

HIGHLAND HIGH SCHOOL
CAFETERIA REHABILITATION AND MODERNIZATION
2900 ROYAL SCOTS WAY
FOR
KERN HIGH SCHOOL DISTRICT
BAKERSFIELD, KERN COUNTY, CALIFORNIA

ARCHITECT S inc.
1601 NEW STINE ROAD, SUITE 280
BAKERSFIELD, CA 93309
PH: (661) 397-4377
FAX: (661) 397-4378
WWW.SCARCHITECT.COM

LICENSED ARCHITECT STEPHEN J. CORBIN No. C-16765 EXP. SEN 12/31/2024 STATE OF CALIFORNIA

STEPHEN J. CORBIN, NCARB, AIA, LEED ®-AP

CHECK AND VERIFY ALL DIMENSIONS BEFORE PROCEEDING WITH THE WORK. REPORT DISCREPANCIES TO THE ARCHITECT. ALL CONSTRUCTION SHALL CONFORM TO THE C.B.C.

DPG
Engineering Inc.
6702 N. Cedar Suite 205
Fresno, Ca. 93710
Ph. (559) 276-5144
Fax (559) 900-6929
Email @ dpgengineering.com

REGISTERED PROFESSIONAL ENGINEER DAVID P. GOTT No. 15451 ELECTRICAL STATE OF CALIFORNIA

FIRE ALARM FLOOR PLAN AND NOTES

MARK	DATE	REVISIONS
1		
2		
3		

JOB NO. 1319
DRAWN : R.L.M.
CHECKED : D.P.G.
DATE : 4/2/24

3.10
OF SHEETS

FIRE DETECTION SYSTEM NOTES:

1. ALL WIRING IS SHOWN DIAGRAMMATICALLY. CONTRACTOR MAY VARY SEQUENCE OR CIRCUITRY: HOWEVER, ALL CIRCUITS SHALL BE CONTINUOUS AND SUPERVISED FROM DEVICE TO DEVICE OR FATC TO DEVICE OR FACP TO FATC OR FATC TO FATC. NO PARALLEL BRANCHING SHALL BE ALLOWED. ANY CONNECTION OF ANY BREAK IN ANY CONDUCTOR SHALL BE BY TERMINAL CONNECTION AT A DEVICE OR AT A FATC ONLY.
2. ALL CONNECTIONS SHALL BE PROPERLY LABELED BY CONDUCTOR AND SHALL HAVE STAKE ON LUG CONNECTORS. PANDUIT TAG (TIE WRAP) SEPARATE.
3. FIRE ALARM TERMINAL CABINETS SHALL HAVE SUFFICIENT SPACE, TERMINAL BOARDS AND SCREW TERMINAL CONNECTORS TO ALLOW CONNECTION OF ALL CONDUCTORS SHOWN. CONTRACTOR SHALL BE REQUIRED TO SUBMIT WITH HIS OTHER SHOP DRAWINGS, DETAILED DRAWINGS OF HIS PROPOSED CONNECTIONS AT EACH FIRE ALARM TERMINAL CABINET PRIOR TO COMMENCING ANY WORK.
4. FIRE ALARM PANEL, REMOTES AND COMPONENTS SHALL BE SECURED TO MOUNTING SURFACES PER MANUFACTURERS SPECIFICATIONS. NO SINGLE DEVICE SHALL EXCEED 20 LBS WITHOUT SPECIAL MOUNTING DETAILS. FIRE ALARM CONTROL PANELS AND REMOTE ANNUNCIATORS SHALL BE INSTALLED WITH THEIR BOTTOMS AT +48" ABOVE FINISHED FLOOR.
5. ALL FIRE ALARM WIRING SHALL BE FPLOR FPLP (FIRE POWER LIMITED OR FIRE POWER LIMITED PLENUM AS REQUIRED FOR APPLICATION. WIRING IN CONDUIT ABOVE GROUND MAY BE TYPE #12 & #14 AWG, STRANDED (19 STRANDS OR LESS) COPPER THHN OR THWN OR #16/2 SLC LOOP UNLESS OTHERWISE NOTED. UNDERGROUND AND EXTERIOR CONDUITS TO HAVE WATER TIGHT FITTINGS AND WIRE TO BE APPROVED FOR WET LOCATIONS.
6. ALL PENETRATIONS THROUGH RATED ASSEMBLIES REQUIRING OPENING PROTECTION SHALL BE PROVIDED WITH A PENETRATION FIRE STOP SYSTEM AS IDENTIFIED IN CBC CHAPTER 7. UL OR OTHER APPROVED LAB TESTING CRITERIA. APPROVED TYPES OF MATERIALS SHALL BE IDENTIFIED WITHIN THE PROJECT SPECIFICATIONS WITHIN THE FIRE ALARM SECTION.
7. INSTALLATION OF F.A. EQUIPMENT SHALL BE BY AN AUTHORIZED ENGINEERED SYSTEM DISTRIBUTOR FOR THE EQUIPMENT SPECIFIED BY THE MANUFACTURER FOR SALES, SERVICE, INSTALLATION AND MAINTENANCE. PROVIDE CERTIFICATIONS WITH EQUIPMENT SUBMITTALS. SUBMITTALS BY FIRMS NOT FULFILLING THIS REQUIREMENT WILL BE AUTOMATICALLY REJECTED. INSTALLER SHALL BE NICET LEVEL 3 CERTIFIED. INSTALLATION OF THE SYSTEMS SHALL NOT BE STARTED UNTIL DETAILED DESIGN DOCUMENTS AND SPECIFICATION, INCLUDING STATE FIRE MARSHAL LISTING NUMBERS FOR EACH COMPONENT OF THE SYSTEM, HAS BEEN APPROVED BY DSA. ANY DISCREPANCIES BETWEEN THE DRAWINGS AND THE CODE OR RECOGNIZED STANDARDS SHALL BE BROUGHT TO THE ATTENTION OF DSA AND THE ARCHITECT / ENGINEER OF THE PROJECT.
8. A STAMPED SET OF APPROVED FIRE ALARM DESIGN DOCUMENTS SHALL BE ON THE JOB SITE AND USED FOR INSTALLATION
9. WRITTEN CERTIFICATION USING NFPA 72 INSPECTION AND TESTING FORM BY THE FIRE ALARM EQUIPMENT DISTRIBUTOR (OR VENDOR OR MANUFACTURER) SHALL BE SUBMITTED TO DSA (WITH COPIES TO THE ELECTRICAL ENGINEER AND THE ARCHITECT OF RECORD) AND THE INSTALLATION INCLUDES TESTING AND OPERATION THAT CONFORMS IN ALL RESPECTS TO THE REQUIREMENTS AS SET FORTH IN C.B.C. SECTION 907.8. THE CONTRACTOR SHALL COMPLETE A FIRE ALARM SYSTEM RECORD AND COMPLETION FORM AND SUBMIT TO DSA.
10. UPON COMPLETION OF THE INSTALLATION OF THE FIRE ALARM SYSTEM, A SATISFACTORY TEST OF THE ENTIRE SYSTEM SHALL BE MADE IN THE PRESENCE OF THE ENFORCING AGENCY AND INSPECTOR OF RECORD. DSA, ARCHITECT/ENGINEER AND OWNER SHALL BE NOTIFIED A MINIMUM OF 48 HOURS PRIOR TO THE FINAL INSPECTION AND OR TESTING.
11. THE CERTIFIED INSTALLER WILL BE REQUIRED TO PROVIDE ALL FACTORY WARRANTIES AT THE CLOSE UP OF THE PROJECT.
12. SMOKE DETECTORS SHALL BE MOUNTED MINIMUM 36" FROM SUPPLY AND RETURN AIR VENTS PER MANUFACTURER'S RECOMMENDATIONS AND NFPA72, 17.7.4.1.(2022 EDITION WITH SFM AMENDMENTS).
13. THE CONTRACTOR SHALL ARRANGE A MEETING WITH F.A. INSTALLER PRIOR TO ROUGH-IN TO COORDINATE THE INSTALLATION.
14. AUTOMATIC FIRE ALARM SYSTEMS SHALL TRANSMIT THE ALARM, SUPERVISORY AND TROUBLE SIGNALS TO AN APPROVED SUPERVISING STATION AS REQUIRED BY CBC 907.6.5. THE SUPERVISING STATION SHALL BE LISTED AS EITHER UUFX OR UUJS BY UNDERWRITERS LABORATORY OR SHALL MEET THE REQUIREMENTS OF FACTORY MUTUAL RESEARCH APPROVAL STANDARD 3011. SUPERVISION OF SYSTEM AND LEASED TELEPHONE LINES SHALL BE ARRANGED BY OWNER.
15. ALARM INDICATING DEVICES OF A FIRE ALARM SYSTEM INTENDED TO ALERT ALL OCCUPANTS SHALL CAUSE A LEVEL OF AUDIBILITY OF NOT LESS THAN 15 DBA ABOVE THE AVERAGE AMBIENT NOISE LEVELS OR 5DBA ABOVE MAXIMUM SOUND LEVEL HAVING A DURATION OF 60 SECONDS WHICH EVER IS GREATER. MEASURED 5' ABOVE THE FLOOR. AMBIENT NOISE LEVELS MEANS THE NOISE LEVEL WHICH CAN NORMALLY BE EXPECTED WHEN THE FACILITY, BUILDING, ROOM OR AREA IS FUNCTIONING UNDER NORMAL OPERATING OR WORKING CONDITIONS PER CFC 907.5.2.1.1. THE FIRE ALARM EVACUATION SIGNAL SHALL SOUND A SYNCHRONIZED THREE PULSE TEMPORAL PATTERN AS DESCRIBED IN NFPA 72 (CBC 907.5.2.1.3 AND NFPA 18.4.2.1.
16. THE CARBON MONOXIDE SIGNAL SHALL SOUND A FOUR PULSE TEMPORAL PATTERN PER NFPA 720 5.8.6.5.1
17. MICROPHONE ACCESSIBILITY SHALL COMPLY WITH CBC 11B-305 AND 11B-308
18. THE ALARM SYSTEM SHALL ACTIVATE A MEANS OF WARNING THE HEARING IMPAIRED. FLASHING VISUAL WARNINGS SHALL HAVE A FLASH RATE NOT EXCEEDING TWO FLASHES PER SECOND (2 HZ) NOR BE LESS THAN ONE FLASH EVERY SECOND (1 HZ). STROBE SIGNALING DEVICES FOR THE HEARING IMPAIRED SHALL BE STATE FIRE MARSHALL APPROVED AND LISTED. VISUAL NOTIFICATION APPLIANCES SHALL BE SYNCHRONIZED.
19. THE AUTOMATIC ALARM SYSTEM SHALL BE INSTALLED, TESTED, AND MAINTAINED IN ACCORDANCE WITH STATE FIRE MARSHAL'S REGULATIONS AS ADOPTED AND AMENDED IN THE 2022 EDITION, CBC CHAPTER 35 (CBC SEC. 907.7, 907.8) & NFPA 72, 2022 EDITION.
20. PROVIDE ACCESS HOLE FOR ALL ATTIC HEAT DETECTORS LOCATED IN NON-ACCESSIBLE CRAWL OR ATTIC SPACES.
21. ALL BATTERIES SHALL BE STAMPED WITH DATE PUT INTO SERVICE.
22. MANUAL PULL STATIONS SHALL NOT REQUIRE TIGHT GRIPPING, OR TWISTING OF THE WRIST TO OPERATE.
23. SYSTEM DESIGN SHALL BE IN ACCORDANCE WITH 2022 CBC, 2022 CFC, 2022 NFPA 72, NATIONAL FIRE ALARM AND SIGNALING CODE AND NFPA 720, STANDARD FOR THE INSTALLATION OF CARBON MONOXIDE DETECTION AND WARNING EQUIPMENT (2015)
24. THE CONTRACTOR SHALL ADJUST/INSTALL ALL DEVICES TO MAXIMIZE PERFORMANCE AND TO MINIMIZE FALSE ALARMS.
25. A DEDICATED BRANCH CIRCUIT SHALL BE PROVIDED FOR FIRE ALARM EQUIPMENT. THIS CIRCUIT SHALL BE ENERGIZED FROM THE COMMON USE AREA PANEL AND SHALL HAVE NO OTHER OUTLETS. THE BREAKER SHALL HAVE A RED LOCKING DEVICE TO BLOCK THE HANDLE IN THE "ON" POSITION. THE CIRCUIT BREAKER SHALL BE LABELED "FIRE ALARM CIRCUIT CONTROL" CIRCUIT ID TO BE LABELED AT FIRE PANEL/EXTENDERS.
26. ALL FIRE ALARM CIRCUITS SHALL BE IN CONDUIT, SURFACE RACEWAYOR OPEN RUN ABOVE CEILINGS, UNDER FLOORS AND IN WALLS IN A NEAT AND PROTECTED MANNER AS INDICATED ON DESIGN DOCUMENTS. EXPOSED EXPOSED CIRCUITS ARE ONLY PERMITTED WHEN NOTED AS EXPOSED ON DESIGN DOCUMENTS.
27. PROVIDE FIRE WATCH TO COMPLY WITH DSA IRF-2 IF DURING CONSTRUCTION THE FIRE ALARM SYSTEM IS NOT OPERATIONAL AND STUDENTS ARE PRESENT IN CAMPUS.
28. VERIFY ALL ADDRESSES OF EXISTING FIRE ALARM INITIATION DEVICES, PRIOR TO INSTALLING AND PROGRAMMING. ANY DISCREPANCIES FROM THE ESTABLISHED PLAN SHALL BE REFLECTED ON THE ONE LINE DIAGRAM OF THE SUBMITTAL.

FIRE ALARM ACCEPTANCE TEST

1. TESTING OF ALL DEVICES AND APPLIANCES, INCLUDING THE BATTERY-(IES), SHALL BE PERFORMED. ALL MANUFACTURER OPERATING RANGES SHALL BE MET.
2. INSPECTION TESTING AND MAINTENANCE OF SYSTEMS, THEIR INITIATING DEVICES AND NOTIFICATION APPLIANCES SHALL COMPLY WITH CHAPTER 14 OF NFPA 72 AND DOCUMENTATION WITH NFPA 72, CHAPTER 7.
3. TESTING OF THE SUPERVISING STATION SIGNALS, AS WELL AS RELAY TO THE APPROPRIATE RESPONDING AGENCY, SHALL BE INCLUDED IN THE ACCEPTANCE TESTING. THE PROJECT INSPECTOR SHALL WITNESS THE ACCEPTANCE INSPECTION AND SHALL SIGN AS THE AHJ REPRESENTATIVE ON THE "SYSTEM RECORD OF COMPLETION" AT SECTION 12.3 [NFPA 72, FIGURE 7.8.2(a)], AND THE "SYSTEM RECORD OF INSPECTION AND TESTING" AT SECTION 10.1 [NFPA 72, FIGURE 7.8.2 (g)].
4. ALL SUPPLEMENTARY RECORDS SHALL BE ATTACHED AS APPLICABLE. THE PROJECT INSPECTOR SHALL VERIFY THAT THE FIRE ALARM SYSTEM IS IN SERVICE PRIOR TO COMPLETION OF THE "SYSTEM RECORD OF COMPLETION" FORM.
5. ALL ORIGINAL DOCUMENTATION SHALL BE RETAINED IN THE REQUIRED DOCUMENTATION CABINET. (NFPA 72, 7.7.2).

SYSTEM DOCUMENTS AS APPLICABLE :

1. RECORD DRAWINGS / AS-BUILTS.
2. EQUIPMENT CUT SHEETS & CA SFM LISTINGS.
3. ALTERNATIVE MEANS AND METHODS.
4. PERFORMANCE BASED DESIGN DOCUMENTATION (NFPA 72, 7.3.7).
5. SYSTEM RECORD OF COMPLETION & ANY SUPPLEMENTAL INSPECTION AND TESTING DOCUMENTATION (NFPA 72, 7.8.2).
6. EMERGENCY RESPONSE PLAN (NFPA 72, 7.3.8).
7. EVALUATION DOCUMENTATION (NFPA 72, 7.3.9).
8. RISK ANALYSIS DOCUMENTATION (NFPA 72, 7.3.6).
9. SOFTWARE & FIRMWARE CONTROL DOCUMENTATION (NFPA 72, 23.2.2).

FIRE ALARM DEVICE SEQUENCE OF OPERATION MATRIX

SYSTEM OUTPUT → / SYSTEM INPUT ↓	CONTROL UNIT ANNUNCIATION							NOTIFICATION					
	ACTUATE COMMON ALARM SIGNAL INDICATOR	ACTUATE AUDIBLE ALARM SIGNAL	ACTUATE COMMON SUPERVISORY SIGNAL INDICATOR	ACTUATE AUDIBLE SUPERVISORY SIGNAL	ACTUATE COMMON TROUBLE SIGNAL INDICATOR	ACTUATE AUDIBLE COMMON TROUBLE SIGNAL	ACTUATE ALARM INDICATOR	ACTUATE EVACUATION SIGNALS	DISPLAY CHANGE OF STATUS	TRANSMIT FIRE ALARM SIGNAL TO SUPERVISING STATION	TRANSMIT FIRE SUPERVISORY SIGNAL TO SUPERVISING STATION	TRANSMIT TROUBLE SIGNAL TO SUPERVISING STATION	
	A	B	C	D	E	F	G	H	I	J	K	L	
AREA SMOKE OR HEAT DETECTORS	•	•					•	•	•	•		•	1
SPRINKLER RISER FLOW SWITCH	•	•					•		•	•		•	2
SPRINKLER RISER TAMPER SWITCH			•	•					•		•	•	3
POWER FAILURE GROUND FAULT					•	•						•	4
ELECTRICAL SUPERVISION												•	5
MANUAL PULL STATION	•	•					•	•	•	•		•	6
NOTIFICATION APPLIANCE SHORT CIRCUIT					•	•						•	7
OPEN CIRCUIT					•	•						•	8
FIRE ALARM SYSTEM LOW BATTERY					•	•						•	9
FIRE ALARM AC POWER FAILURE					•	•						•	10

FA CABLE SCHEDULE

'A'	ADDRESSABLE FA COMMUNICATION CABLE	WEST PENN #D990 (INDOOR)	WEST PENN #AQ225 (OUTDOOR)
'B'	2#12 CU.	2#12 CU.	2#12 CU.
'C'	SPEAKER CABLE 16/2	WEST PENN #D990 (INDOOR-BLUE)	WEST PENN #AQ294 (OUTDOOR)

NOTE: ALL FIRE ALARM CABLE INSTALLED IN 3/4"C EMT RED MIN.

FACP BATTERY CALCULATION

Fire Alarm Control Panel "FAP-4"

POWER REQUIREMENTS

		CURRENT [A] SUPERVISORY	ALARM
PANEL *		0.450	1.161
ADD'L SLC LOOP *	0	0.000	
NAC CKTS @ .035 EA	4	0.140	2.534
EXPANDER PNL	0	0.000	
TOTALS		0.590	3.695

BATTERY CAPACITY

SUPERVISORY POWER	= 24 Hr * 0.59A =	14.160 AHr
ALARM POWER	= 0.25 Hr * 3.695A =	0.924 AHr
	TOTAL POWER REQUIREMENT =	15.084 AHr
	WITH 20% SAFETY FACTOR =	18.101 Ahr
	MINIMUM BATTERY CAPACITY =	26 AHr

REPLACE (E) BATTERIES WITH NOTIFIER TWO BAT-12550-BP BATTRIES

*SUPERVISORY CURRENT INCLUDES MAXIMUM NUMBER OF INITIATION DEVICES, ON SLC LOOPS.

VOLTAGE DROP CALCULATION

NAC Circuit '1'

VD = Voltage Drop [V]
I = Current [A] (1.252A)
K = 11 (Copper Constant)
L = Distance to Load [ft.] (230')
CM = Circular Mils (#12 AWG = 6530)
V = Voltage [V] (24VDC)

$$VD = \frac{K * I * 2L}{CM} = \frac{11 * 1.252 * 2 * 230}{6530} = 0.970\ V$$

$$VD\% = \frac{VD}{20.4} = 4.8\%$$

VOLTAGE DROP CALCULATION

NAC Circuit '2'

VD = Voltage Drop [V]
I = Current [A] (1.282A)
K = 11 (Copper Constant)
L = Distance to Load [ft.] (330')
CM = Circular Mils (#12 AWG = 6530)
V = Voltage [V] (24VDC)

$$VD = \frac{K * I * 2L}{CM} = \frac{11 * 1.282 * 2 * 330}{6530} = 1.425\ V$$

$$VD\% = \frac{VD}{20.4} = 7.0\%$$

BATTERY CALCULATION

Voice Evac. Amplifier Cabinet 'DAA 5025'

POWER REQUIREMENTS

	CURRENT [A] STANDBY	ALARM
PANEL OVERHEAD	0.027	0.446
SPEAKER LOAD	-	1.168
TOTALS	0.027	1.614

BATTERY CAPACITY

SUPERVISORY POWER	= 24 Hr * 0.0272A =	0.653 AHr
SPEAKER LOAD	= 0.25 Hr * 1.614A =	0.404 AHr
	TOTAL POWER REQUIREMENT =	1.056 AHr
	WITH 20% SAFETY FACTOR =	1.268 AHr
	MINIMUM BATTERY CAPACITY =	5 AHr

NOTIFIER (2) BAT-1250-BP BATTRIES

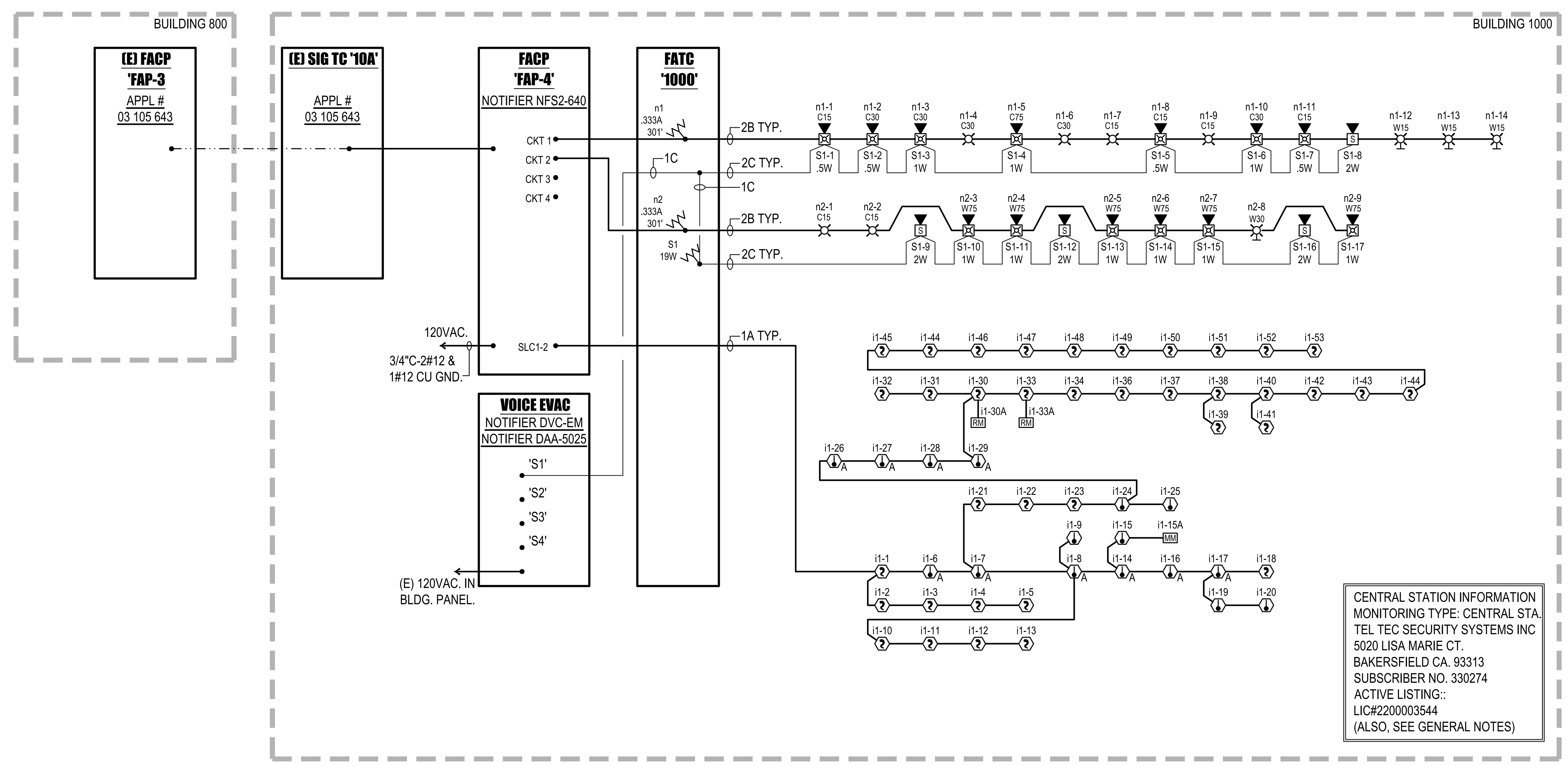

FIRE ALARM SINGLE LINE DIAGRAM

NOT TO SCALE 1 E3.20

IDENTIFICATION STAMP
DIV. OF THE STATE ARCHITECT
APP: 03-122528 INC:
REVIEWED FOR
SS ☑ FLS ☑ ACS ☑
DATE: 01/06/2025

PTN : 63529-385 FILE: 15-H3

HIGHLAND HIGH SCHOOL

CAFETERIA REHABILITATION AND MODERNIZATION
2900 ROYAL SCOTS WAY
FOR
KERN HIGH SCHOOL DISTRICT
BAKERSFIELD, KERN COUNTY, CALIFORNIA

SC ARCHITECT inc.
1601 NEW STINE ROAD, SUITE 280
BAKERSFIELD, CA 93309
PH: (661) 397-4377
FAX: (661) 397-4378
WWW.SCARCHITECT.COM

STEPHEN J. CORBIN, NCARB, AIA, LEED ®-AP

CHECK AND VERIFY ALL DIMENSIONS BEFORE PROCEEDING WITH THE WORK. REPORT DISCREPANCIES TO THE ARCHITECT. ALL CONSTRUCTION SHALL CONFORM TO THE C.B.C.

DPG Engineering Inc.
6702 N. Cedar Suite 205
Fresno, Ca. 93710
Ph. (559) 276-5144
Fax (559) 900-4929
Email @ dpgengineering.com

REGISTERED PROFESSIONAL ENGINEER
DAVOR P. GOLIK
17151
EXP. 09/30/25
ELECTRICAL
STATE OF CALIFORNIA

FIRE ALARM SINGLE LINE DIAGRAM, CALC'S, SCHEDULES AND NOTES

MARK	DATE	REVISIONS
1		
2		
3		

JOB NO. 1319
DRAWN : R.L.M.
CHECKED : D.P.G.
DATE : 4/2/24

3.20
OF SHEETS

STATE OF CALIFORNIA

Electrical Power Distribution

NRCC-ELC-E (Created 01/20) CALIFORNIA ENERGY COMMISSION

CERTIFICATE OF COMPLIANCE	NRCC-ELC-E
This document is used to demonstrate compliance with mandatory requirements in §130.5 for electrical systems in newly constructed nonresidential, high-rise residential and hotel/motel occupancies. Additions and alterations to electrical service systems in these occupancies will also use this document to demonstrate compliance per §141.0(a) or §141.0(b)2P for alterations.	
Project Name: LOUNGE T.I.	Report Page: Page 1 of 5
Project Address: BAKERSFIELD	Date Prepared: 8-15-22

A. GENERAL INFORMATION

01 Project Location (city)		BAKERSFIELD	02 Occupancy Types Within Project:		
☐ Office	☐ Retail	☐ Warehouse	☐ Hotel/ Motel	☑ School	☐ Support Areas
☐ Parking Garage	☐ High-Rise Residential	☐ Relocatable	☐ Healthcare Facilities	☐ Other (Write In):	

B. PROJECT SCOPE

Table Instructions: Include any electrical service systems that are within the scope of the permit application.

01	02	03	04	05	06
Electrical Service Designation/ Description	Scope of Work[1]	Rating (kVA)	Utility Provided Metering System Exception to §130.5(a)[2]	System subject to CA Elec Code Article 517 Exception to §130.5(a)&(b)	Demand Response Controls: Where required, demand response controls must be specified which are capable of receiving and automatically responding to at least one standards based messaging protocol which enables demand response after receiving a demand response signal. Sections §120.2, §130.1 and §130.3 and compliance documents NRCC-MCH, NRCC-LTI and NRCC-LTS will indicate when demand response controls are required.
10-A	Complete replacement service equipment, no meter change	332.4	☑	☐	

[1] FOOTNOTES: Adding only new feeders and branch circuits triggers Voltage Drop 130.5(c), no other requirements from 130.5 are required.
[2] Applicable if the utility company is providing a metering system that indicates instantaneous kW demand and kWh for a utility-defined period.

C. COMPLIANCE RESULTS

Table Instructions: If this table says "DOES NOT COMPLY" refer to Table D. for guidance and review the Table that indicates "No".

01		02		03		04	05
Service Electrical Metering §130.5(a)	AND	Separation for Monitoring §130.5(b)	AND	Voltage Drop §130.5(c)	AND	Controlled Receptacles §130.5(d)	**Compliance Results**
(See Table F)		(See Table G)		(See Table H)		(See Table I)	
	AND	Yes	AND	Yes	AND	Yes	**COMPLIES with Exceptional Conditions**

STATE OF CALIFORNIA

Electrical Power Distribution

NRCC-ELC-E (Created 01/20) CALIFORNIA ENERGY COMMISSION

CERTIFICATE OF COMPLIANCE	NRCC-ELC-E
Project Name: LOUNGE T.I.	Report Page: Page 2 of 5
Project Address: BAKERSFIELD	Date Prepared: 8-15-22

D. EXCEPTIONAL CONDITIONS

This table is auto-filled with uneditable comments because of selections made or data entered in tables throughout the form.

Table B indicates the project is exempt from §130.5(a) Service Electrical Metering requirements because the utility company has provided the project a metering system that indicates instantaneous kW demand and kWh for a utility-definied period.

E. ADDITIONAL REMARKS

This table includes remarks made by the permit applicant to the Authority Having Jurisdiction.

F. SERVICE ELECTRICAL METERING

This Section Does Not Apply

G. SEPARATION OF ELECTRICAL CIRCUITS FOR ENERGY MONITORING

Table Instructions: Complete this table for entirely new or complete replacement electrical power distribution systems to demonstrate compliance with §130.5(b). Using the dropdown choices in column 01, indicate the load types included for each service. Any load types that are not included in the service do not need to be shown.

Electrical Service Designation/Description: 10-A

01	02	03	04	05	
Load Type per Table 130.5-B[1]	Minimum Required Separation of Load per Table 130.5-B	Compliance Method[2]	Location of Requirements in Construction Documents	Field Inspector	
				Pass	Fail
Lighting including exit, egress and exterior	All lighting disaggregated by floor, type or area	Method 3	E1.20	☐	☐
HVAC systems and components	All HVAC in aggregate and each HVAC load rated at least 50 kVA	Method 3	E1.20	☐	☐
Plug Loads and appliances < 25kVA	All plug load separated by floor, type or area Groups of plug loads exceeding 25 kVA connected load in an area less than 5000 sf	Method 3	E1.20	☐	☐

** NOTES: If "Other*" is selected under Compliance Method above, please indicate how compliance has been achieved in the space provided below.*

STATE OF CALIFORNIA

Electrical Power Distribution

NRCC-ELC-E (Created 01/20) CALIFORNIA ENERGY COMMISSION

CERTIFICATE OF COMPLIANCE	NRCC-ELC-E
Project Name: LOUNGE T.I.	Report Page: Page 3 of 5
Project Address: BAKERSFIELD	Date Prepared: 8-15-22

[1] FOOTNOTES: For each separate load type, up to 10% of the connected load may be of any type.
[2] Method 1: Switchboards/ motor control centers/ panelboard loads disaggregated for each load type
Method 2: Switchboards/ motor control centers/ panelboard supply other distribution equipment with loads disaggregated for each load type
Method 3: Branch circuits serve load types individually & provisions for adding future branch curcuit monitoring
Method 4: Complete metering system measures and reports loads by type
See Chapter 8 of the Nonresidential Compliance Manual for more detail on Compliance Methods.

H. VOLTAGE DROP

Table Instructions: Please complete this table for entirely new or complete replacement electrical power distribution systems, or alterations that add, modify or replace both feeders and branch circuits to demonstrate compliance with §130.5(c). For alterations, only the altered circuits must demonstrate compliance per §141.0(b)2Piii.

01	02		03	04	05	
Electrical Service Designation/ Description	Combined Voltage Drop on Installed Feeder/Branch Circuit Conductors Compliance Method		Location of Voltage Drop Calculations[1]	Sheet Number for Voltage Drop Calculations in Construction Documents	Field Inspector	
					Pass	Fail
10-A	☑ Voltage drop < 5%	☐ Permitted by CA Elec Code (Exception to §130.5(c))*	In construction documents	E1.20	☐	☐

**NOTES If "Permitted by CA Elec Code*" is selected under Compliance Method above, please indicate where the exception applies in the space provided below.*
[1] FOOTNOTES: Voltage drop calculations may be attached to the permit application outside the construction documents if allowed by the Authority Having Jurisdiction. Select "attached" if applicable. If calculations will be the responsibility of the installing contractor, select "Contractor Responsible".

I. CIRCUIT CONTROLS FOR 120-VOLT RECEPTACLES AND CONTROLLED RECEPTACLES

Table Instructions: Please complete this table for entirely new or complete replacement electrical power distribution systems to demonstrate compliance with §130.5(d). Both controlled and uncontrolled receptacles must be provided in office areas, lobbies, conference rooms, kitchen areas in office spaces, copy rooms and hotel/motel guest rooms.

01	02	03	04	05	06	
Room Name or Description	Location/ Type of Controlled Receptacles	Shut-Off Controls	Permanent Durable Marking Will be Used	Location of Requirements in Construction Documents	Field Inspector	
					Pass	Fail
OFFICE	Within 6ft of uncontrolled receptacles	Occupancy Sensor	☑	E1.20	☐	☐
				Add Row	Remove Last	

** If "Other*" is selected under Compliance Method above, please indicate how compliance has been achieved in the space provided below.*

STATE OF CALIFORNIA

Electrical Power Distribution

NRCC-ELC-E (Created 01/20) CALIFORNIA ENERGY COMMISSION

CERTIFICATE OF COMPLIANCE	NRCC-ELC-E
Project Name: LOUNGE T.I.	Report Page: Page 4 of 5
Project Address: BAKERSFIELD	Date Prepared: 8-15-22

J. DECLARATION OF REQUIRED CERTIFICATES OF INSTALLATION

Table Instructions: Selections have been made based on information provided in previous tables of this document. If any selection needs to be changed, please explain why in Table E. Additional Remarks. These documents must be provided to the building inspector during construction and can be found online at https://ww2.energy.ca.gov/title24/2019standards/2019_compliance_documents/Nonresidential_Documents/NRCI/

YES	NO	Form/Title	Field Inspector	
			Pass	Fail
◉	○	NRCI-ELC-01-E - Must be submitted for all buildings.	☐	☐

K. DECLARATION OF REQUIRED CERTIFICATES OF ACCEPTANCE

There are no Certificates of Acceptance applicable to electrical power distribution requirements.

STATE OF CALIFORNIA

Electrical Power Distribution

NRCC-ELC-E (Created 01/20) CALIFORNIA ENERGY COMMISSION

CERTIFICATE OF COMPLIANCE	NRCC-ELC-E
Project Name: LOUNGE T.I.	Report Page: Page 5 of 5
Project Address: BAKERSFIELD	Date Prepared: 8-15-22

DOCUMENTATION AUTHOR'S DECLARATION STATEMENT

I certify that this Certificate of Compliance documentation is accurate and complete.

Documentation Author Name: DAVOR P. GOLIK P.E.	Documentation Author Signature: [signature]
Company: DPG ENGINEERING	Signature Date: 8-15-22
Address: 6702 N CEDAR	CEA/ HERS Certification Identification (if applicable):
City/State/Zip: FRESNO CA 93710	Phone: 559 276 5144

RESPONSIBLE PERSON'S DECLARATION STATEMENT

I certify the following under penalty of perjury, under the laws of the State of California:

1. **The information provided on this Certificate of Compliance is true and correct.**
2. **I am eligible under Division 3 of the Business and Professions Code to accept responsibility for the building design or system design identified on this Certificate of Compliance (responsible designer)**
3. **The energy features and performance specifications, materials, components, and manufactured devices for the building design or system design identified on this Certificate of Compliance conform to the requirements of Title 24, Part 1 and Part 6 of the California Code of Regulations.**
4. **The building design features or system design features identified on this Certificate of Compliance are consistent with the information provided on other applicable compliance documents, worksheets, calculations, plans and specifications submitted to the enforcement agency for approval with this building permit application.**
5. **I will ensure that a completed signed copy of this Certificate of Compliance shall be made available with the building permit(s) issued for the building, and made available to the enforcement agency for all applicable inspections. I understand that a completed signed copy of this Certificate of Compliance is required to be included with the documentation the builder provides to the building owner at occupancy.**

Responsible Designer Name: DAVOR P. GOLIK P.E.	Responsible Designer Signature: [signature]
Company :	Date Signed: 8-15-22
Address:	License: E17151
City/State/Zip:	Phone:

IDENTIFICATION STAMP
DIV. OF THE STATE ARCHITECT
APP: 03-122528 INC:
REVIEWED FOR
SS ☑ FLS ☑ ACS ☑
DATE: 01/06/2025

PTN : 63529-385 FILE: 15-H3

HIGHLAND HIGH SCHOOL
CAFETERIA REHABILITATION AND MODERNIZATION
2900 ROYAL SCOTS WAY
FOR
KERN HIGH SCHOOL DISTRICT
BAKERSFIELD, KERN COUNTY, CALIFORNIA

1601 NEW STINE ROAD, SUITE 280
BAKERSFIELD, CA 93309
PH: (661) 397-4377
FAX: (661) 397-4378
WWW.SCARCHITECT.COM

LICENSED ARCHITECT STEPHEN J. CORBIN No. C-16788 REN 11/30/25 STATE OF CALIFORNIA

STEPHEN J. CORBIN, NCARB, AIA, LEED ®-AP

CHECK AND VERIFY ALL DIMENSIONS BEFORE PROCEEDING WITH THE WORK. REPORT DISCREPANCIES TO THE ARCHITECT. ALL CONSTRUCTION SHALL CONFORM TO THE C.B.C.

DPG Engineering Inc.
6702 N. Cedar Suite 205
Fresno, Ca. 93710
Ph. (559) 276-5144
Fax (559) 900-4929
Email @ dpgengineering.com

REGISTERED PROFESSIONAL ENGINEER DAVOR P. GOLIK 17151 EXP. 09/30/25 ELECTRICAL STATE OF CALIFORNIA

NRCC

MARK	DATE	REVISIONS
1		
2		
3		

JOB NO. 1319
DRAWN : R.L.M.
CHECKED : D.P.G.
DATE : 4/2/24

4.00
OF SHEETS

STATE OF CALIFORNIA
Indoor Lighting
CALIFORNIA ENERGY COMMISSION

CERTIFICATE OF COMPLIANCE — **NRCC-LTI-E**

This document is used to demonstrate compliance with requirements in 110.9, 110.12(c), 130.0, 130.1, 140.6 and 141.0(b)2 for indoor lighting scopes using the prescriptive path for nonresidential and hotel/motel occupancies. It is also used to document compliance with requirements in 160.5, 170.2(e) and 180.2(b)4 for indoor lighting scopes using the prescriptive path for multifamily occupancies. Multifamily includes dormitory and senior living facilities.

Project Name:	HIGHLAND CAFETERIA	**Report Page:**	**(Page 1 of 8)**
Project Address:	2900 ROYAL SCOTS WAY	**Date Prepared:**	5/2/2024

A. GENERAL INFORMATION

01	Project Location (city)	BAKERSFIELD	04 Total Conditioned Floor Area (ft^2)	9,496
02	Climate Zone	13	05 Total Unconditioned Floor Area (ft^2)	0
03	Occupancy Types Within Project (select all that apply):		06 # of Stories (Habitable Above Grade)	1

● Support Areas ● All Other Occupancies

B. PROJECT SCOPE

This table includes any lighting systems that are within the scope of the permit application and are demonstrating compliance using the prescriptive path outlined in 140.6 / 170.2(e) or 141.0(b)2 / 180.2(b)4 for alterations.

Scope of Work	Conditioned Spaces		Unconditioned Spaces	
01	02	03	04	05
My Project Consists of (check all that apply):	Calculation Method	Area (ft^2)	Calculation Method	Area (ft^2)
☒ New Lighting System	Area Category Method	9496	Area Category Method	0
☐ New Lighting System - Parking Garage				
Total Area of Work (ft^2)	9496		0	

STATE OF CALIFORNIA
Indoor Lighting
CALIFORNIA ENERGY COMMISSION

CERTIFICATE OF COMPLIANCE — **NRCC-LTI-E**

Project Name:	HIGHLAND CAFETERIA	**Report Page:**	**(Page 2 of 8)**
		Date Prepared:	5/2/2024

C. COMPLIANCE RESULTS

If any cell on this table says "DOES NOT COMPLY" or "COMPLIES with Exceptional Conditions" refer to Table D. for guidance.

Lighting in conditioned and unconditioned spaces must not be combined for compliance per 140.6(b)1 / 170.2(e)	Allowed Lighting Power per 140.6(b) / 170.2(e) (Watts)						Adjusted Lighting Power per 140.6(a) / 170.2(e) (Watts)				Compliance Results
	01	02	03	04		05	06	07		08	09
	Complete Building 140.6(c)1	Area Category 140.6(c)2 / 170.2(e)4	Area Category Additional 140.6(c)2G / 170.2(e)4Av (+)	Tailored 140.6(c)3 / 170.2(e)4B (+)	=	**Total Allowed** (Watts)	Total Designed (Watts)	Adjustments: PAF Lighting Control Credits 140.6(a)2 / 170.2(e)1B (-)	=	**Total Adjusted** (Watts) *Includes Adjustments	**05 must be >= 08 140.6 / 170.2(e)**
	(See Table I)	(See Table I)	(See Table J)	(See Table K)			(See Table F)	(See Table P)			
Conditioned		5,341.2	0		=	5,341	≥ 5,150	0	=	5150	COMPLIES
Unconditioned					=		≥		=		
Controls Compliance (See Table H for Details)											COMPLIES
Rated Power Reduction Compliance (See Table Q for Details)											

D. EXCEPTIONAL CONDITIONS

This table is auto-filled with uneditable comments because of selections made or data entered in tables throughout the form.

E. ADDITIONAL REMARKS

This table includes remarks made by the permit applicant to the Authority Having Jurisdiction.

STATE OF CALIFORNIA
Indoor Lighting
CALIFORNIA ENERGY COMMISSION

CERTIFICATE OF COMPLIANCE — **NRCC-LTI-E**

Project Name:	HIGHLAND CAFETERIA	**Report Page:**	**(Page 3 of 8)**
		Date Prepared:	5/2/2024

F. INDOOR LIGHTING FIXTURE SCHEDULE

This table includes all planned permanent and portable lighting other than dwelling unit/ hotel/ motel room lighting. Multifamily dwelling unit and hotel/motel room lighting is documented in Table T. If using Table T to document lighting in multifamily common use areas providing shared provisions for living, eating, cooking or sanitation, those luminaires are not included here.

Designed Wattage: Conditioned Spaces

01	02	03	04	05	06	07	08	09	10	
Name or Item Tag	Complete Luminaire Description	Modular (Track) Fixture	Small Aperture & Color Change[1]	Watts per luminaire[2]	How is Wattage determined	Total Number of Luminaires	Excluded per 140.6(a)3 / 170.2(e)2C	Design Watts	Field Inspector: Pass	Fail
A	212 WATT LED	No	NA	212	Mfr. Spec	3	No	636	☐	☐
A2	169 WATT LED	No	NA	169	Mfr. Spec	6	No	1,014	☐	☐
A3	127 WATT LED	No	NA	127	Mfr. Spec	6	No	762	☐	☐
A4	85 WATT LED	No	NA	85	Mfr. Spec	6	No	510	☐	☐
A5	64 WATT LED	No	NA	64	Mfr. Spec	2	No	128	☐	☐
B	40 WATT LED	No	NA	40	Mfr. Spec	30	No	1,200	☐	☐
BA	18 WATT LED	No	NA	18	Mfr. Spec	4	No	72	☐	☐
Be	40 WATT LED	No	NA	40	Mfr. Spec	10	No	400	☐	☐
C	25 WATT LED	No	NA	25	Mfr. Spec	14	No	350	☐	☐
Ce	25 WATT LED	No	NA	25	Mfr. Spec	2	No	50	☐	☐
D	17 WATT LED	No	NA	17	Mfr. Spec	1	No	17	☐	☐
F	11 WATT LED	No	NA	11	Mfr. Spec	1	No	11	☐	☐
							Total Designed Watts: CONDITIONED SPACES	5,150		

[1]*FOOTNOTE: Design Watts for small aperture and color changing luminaires which qualify per 140.6(a)4B / 170.2(e)2D is adjusted to be 75% /80% of their rated wattage. Table F automatically makes this adjustment, the permit applicant should enter full rated wattage in column 05.*

[2]*Authority Having Jurisdiction may ask for Luminaire cut sheets to confirm wattage used for compliance per 130.0(c) / 160.5(b). Wattage used must be the maximum rated for the luminaire, not the lamp.*

G. MODULAR LIGHTING SYSTEMS

This section does not apply to this project.

STATE OF CALIFORNIA
Indoor Lighting
CALIFORNIA ENERGY COMMISSION

CERTIFICATE OF COMPLIANCE — **NRCC-LTI-E**

Project Name:	HIGHLAND CAFETERIA	**Report Page:**	**(Page 4 of 8)**
		Date Prepared:	5/2/2024

H. INDOOR LIGHTING CONTROLS (Not including PAFs)

This table includes lighting controls for conditioned and unconditioned spaces.

Building Level Controls

01	02	03	
Mandatory Demand Response 110.12(c)	Shut-off controls 130.1(c) / 160.5(b)4C	Field Inspector: Pass	Fail
Required >= 4,000W subject to multilevel	See Area/Space Level Controls	☐	☐

Area Level Controls

04	05	06	07	08	09	10	11	12	
Area Description	Complete Building or Area Category Primary Function Area	Manual Area Controls 130.1(a) / 160.5(b)4A	Multi-Level Controls 130.1(b) / 160.5(b)4B	Shut-Off Controls 130.1(c) // 160.5(b)4C	Primary/Skylit Daylighting 130.1(d) / 160.5(b)4D	Secondary Daylighting 130.1(d) / 160.5(b)4D	Interlocked Systems 140.6(a)1/ 170.2(e)2A	Field Inspector: Pass	Fail
DINING	Dining - Fastfood	Readily Accessible	Dimmer	Auto. Time Switch	Included	Included	No	☐	☐
KITCHEN	Kitchen/ Food Preparation	Readily Accessible	Dimmer	See Building Level	NA:Garage < 36sf opening	NA:Garage < 36sf opening	No	☐	☐
STORAGE	All Other Space Types	Readily Accessible	Dimmer	See Building Level	NA:Garage < 36sf opening	NA:Garage < 36sf opening	No	☐	☐
BREAK ROOM	Lounge	Readily Accessible	Dimmer	See Building Level	NA:Garage < 36sf opening	NA:Garage < 36sf opening	No	☐	☐
RESTROOM	Restroom	Readily Accessible	NA: Enclosed area <100SF	See Building Level	NA:Garage < 36sf opening	NA:Garage < 36sf opening	No	☐	☐

STATE OF CALIFORNIA
Indoor Lighting
CALIFORNIA ENERGY COMMISSION

CERTIFICATE OF COMPLIANCE — **NRCC-LTI-E**

Project Name:	HIGHLAND CAFETERIA	**Report Page:**	**(Page 5 of 8)**
		Date Prepared:	5/2/2024

H. INDOOR LIGHTING CONTROLS (Not including PAFs)

MECHANICAL	Electrical Mechancial Telephone Room	Readily Accessible	Dimmer	See Building Level	NA:Garage < 36sf opening	NA:Garage < 36sf opening	No	☐	☐
HALL	Corridor	Readily Accessible	Dimmer	See Building Level	NA:Garage < 36sf opening	NA:Garage < 36sf opening	No	☐	☐
					13				
					Plan Sheet Showing Daylit Zones:				

I. LIGHTING POWER ALLOWANCE: COMPLETE BUILDING OR AREA CATEGORY METHODS

Each area complying using the Complete Building or Area Category Methods per 140.6(b) are included in this table. Column 06 indicates if additional lighting power allowances per 140.6(c) or adjustments per 140.6(a) are being used .

Conditioned Spaces

01	02	03	04	05	06	
Area Description	Complete Building or Area Category Primary Function Area	Allowed Density (W/ft^2)	Area (ft^2)	Allowed Wattage (Watts)	Additional Allowance / Adjustment: Area Category	PAF
DINING	All Other Space Types	0.45	5,721	2,574.5	No	No
KITCHEN	Kitchen/ Food Preparation	0.95	1,989	1,889.6	No	No
STORAGE	All Other Space Types	0.4	569	227.6	No	No
BREAK ROOM	Lounge	0.55	321	176.6	No	No
RESTROOM	Restroom	0.65	458	297.7	No	No
MECHANICAL	Electrical Mechancial Telephone Room	0.4	30	12	No	No
HALL	Corridor	0.4	408	163.2	No	No
		TOTALS:	9,496	5,341.2	See Tables J, or P for detail	

J. ADDITIONAL ALLOWANCE: AREA CATEGORY METHOD QUALIFYING LIGHTING SYSTEM

This section does not apply to this project.

STATE OF CALIFORNIA
Indoor Lighting
CALIFORNIA ENERGY COMMISSION

CERTIFICATE OF COMPLIANCE — **NRCC-LTI-E**

Project Name:	HIGHLAND CAFETERIA	**Report Page:**	**(Page 6 of 8)**
		Date Prepared:	5/2/2024

K. TAILORED METHOD GENERAL LIGHTING POWER ALLOWANCE

This section does not apply to this project.

L. ADDITIONAL LIGHTING ALLOWANCE: TAILORED WALL DISPLAY

This section does not apply to this project.

M. ADDITIONAL LIGHTING ALLOWANCE: TAILORED FLOOR AND TASK LIGHTING

This section does not apply to this project.

N. ADDITIONAL LIGHTING ALLOWANCE: TAILORED DECORATIVE /SPECIAL EFFECTS

This section does not apply to this project.

O. ADDITIONAL LIGHTING ALLOWANCE: TAILORED VERY VALUABLE MERCHANDISE

This section does not apply to this project.

P. POWER ADJUSTMENT: LIGHTING CONTROL CREDIT (POWER ADJUSTMENT FACTOR (PAF))

This section does not apply to this project.

Q. RATED POWER REDUCTION COMPLIANCE FOR ONE-FOR-ONE ALTERATIONS

This section does not apply to this project.

R. 80% LIGHTING POWER FOR ALL ALTERATIONS - CONTROLS EXCEPTIONS

This section does not apply to this project.

STATE OF CALIFORNIA
Indoor Lighting
CALIFORNIA ENERGY COMMISSION

CERTIFICATE OF COMPLIANCE — **NRCC-LTI-E**

Project Name:	HIGHLAND CAFETERIA	**Report Page:**	**(Page 7 of 8)**
		Date Prepared:	5/2/2024

S. DAYLIGHT DESIGN POWER ADJUSTMENT FACTOR (PAF)

This section does not apply to this project.

T. DWELLING UNIT LIGHTING

This section does not apply to this project.

U. DECLARATION OF REQUIRED CERTIFICATES OF INSTALLATION

Selections have been made based on information provided in this document. If any selections have been changed by permit applicant, an explanation should be included in Table E. Additional Remarks. These documents must be provided to the building inspector during construction and can be found online

Form/Title
NRCI-LTI-E - Must be submitted for all buildings

V. DECLARATION OF REQUIRED CERTIFICATES OF ACCEPTANCE

Selections have been made based on information provided in this document. If any selections have been changed by the permit applicant, an explanation should be included in Table E. Additional Remarks. These documents must be provided to the building inspector during construction and any with "-A" in the form name must be completed through an Acceptance Test Technician Certification Provider (ATTCP). For more information visit: http://www.energy.ca.gov/title24/attcp/providers.html

Form/Title	Systems/Spaces To Be Field Verified
NRCA-LTI-02-A - Must be submitted for occupancy sensors and automatic time switch controls.	DINING;
NRCA-LTI-03-A - Must be submitted for automatic daylight controls.	DINING;
NRCA-LTI-04-A - Must be submitted for demand responsive lighting controls.	Whole Building Demand Response;

STATE OF CALIFORNIA
Indoor Lighting
CALIFORNIA ENERGY COMMISSION

CERTIFICATE OF COMPLIANCE — **NRCC-LTI-E**

Project Name:	HIGHLAND CAFETERIA	**Report Page:**	**(Page 8 of 8)**
Project Address:	2900 ROYAL SCOTS WAY	**Date Prepared:**	5/2/2024

DOCUMENTATION AUTHOR'S DECLARATION STATEMENT

I certify that this Certificate of Compliance documentation is accurate and complete.

Documentation Author Name: Davor P. Golik PE	Documentation Author Signature:
Company: DPG Engineering, Inc.	Signature Date: 2024-05-02
Address: 6702 N CEDAR	CEA/ HERS Certification Identification (if applicable): E17151
City/State/Zip: FRESNO CA 93710	Phone: 559 276 5144

RESPONSIBLE PERSON'S DECLARATION STATEMENT

I certify the following under penalty of perjury, under the laws of the State of California:

1. The information provided on this Certificate of Compliance is true and correct.
2. I am eligible under Division 3 of the Business and Professions Code to accept responsibility for the building design or system design identified on this Certificate of Compliance (responsible designer)
3. The energy features and performance specifications, materials, components, and manufactured devices for the building design or system design identified on this Certificate of Compliance conform to the requirements of Title 24, Part 1 and Part 6 of the California Code of Regulations.
4. The building design features or system design features identified on this Certificate of Compliance are consistent with the information provided on other applicable compliance documents, worksheets, calculations, plans and specifications submitted to the enforcement agency for approval with this building permit application.
5. I will ensure that a completed signed copy of this Certificate of Compliance shall be made available with the building permit(s) issued for the building, and made available to the enforcement agency for all applicable inspections. I understand that a completed signed copy of this Certificate of Compliance is required to be included with the documentation the builder provides to the building owner at occupancy.

Responsible Designer Name: DAVOR P GOLIK P.E.	Responsible Designer Signature:
Company: DPG ENGINEERING	Date Signed: 2024-05-02
Address: 6702 N CEDAR #205	License: E17151
City/State/Zip: FRESNO CA 93710	Phone: 559 276 5144

IDENTIFICATION STAMP
DIV. OF THE STATE ARCHITECT
APP: 03-122528 INC:
REVIEWED FOR
SS ☑ FLS ☑ ACS ☑
DATE: 01/06/2025

PTN: 63529-385 FILE: 15-H3

HIGHLAND HIGH SCHOOL
CAFETERIA REHABILITATION AND MODERNIZATION
2900 ROYAL SCOTS WAY
FOR
KERN HIGH SCHOOL DISTRICT
BAKERSFIELD, KERN COUNTY, CALIFORNIA

ARCHITECT
S.C. inc.
1601 NEW STINE ROAD, SUITE 280
BAKERSFIELD, CA 93309
PH: (661) 397-4377
FAX: (661) 397-4378
WWW.SCARCHITECT.COM
LICENSED ARCHITECT STEPHEN J. CORBIN No. - 16785 EXPIRES 11/30/24 CALIFORNIA
STEPHEN J. CORBIN, NCARB, AIA, LEED ® -AP

CHECK AND VERIFY ALL DIMENSIONS BEFORE PROCEEDING WITH THE WORK. REPORT DISCREPANCIES TO THE ARCHITECT. ALL CONSTRUCTION SHALL CONFORM TO THE C.B.C.

DPG Engineering Inc.
6702 N. Cedar Suite 205
Fresno, Ca. 93710
Ph. (559) 276-5144
Fax (559) 905-6509
Email @dpgengineering.com
REGISTERED PROFESSIONAL ENGINEER DAVOR P. GOLIK No. 51151 ELECTRICAL STATE OF CALIFORNIA

TITLE 24
INDOOR

MARK	DATE	REVISIONS
1		
2		
3		

JOB NO. 1319
DRAWN: R.L.M.
CHECKED: D.P.G.
DATE: 4/2/24

5.00 OF SHEETS

STATE OF CALIFORNIA
Outdoor Lighting
CALIFORNIA ENERGY COMMISSION

CERTIFICATE OF COMPLIANCE		NRCC-LTO-E
This document is used to demonstrate compliance with requirements in 110.9, 130.0, 130.2, 140.7, and 141.0(b)2L for outdoor lighting scopes using the prescriptive path for nonresidential and hotel/motel occupancies. It is also used to document compliance with requirements in 160.5, 170.2(e)6, 180.1(a) and 180.2(b)4Bv for outdoor lighting scopes using the prescriptive path for multifamily and mixed-use occupancies. Multifamily includes dormitory and senior living facilities.		
Project Name: HIGHLAND CAFETERIA	**Report Page:**	**(Page 1 of 7)**
Project Address: 2900 ROYAL SCOTS WAY	**Date Prepared:**	5/2/2024

A. GENERAL INFORMATION

01	Project Location (city)	BAKERSFIELD	04 Total Illuminated Hardscape Area (ft^2)	4102
02	Climate Zone	13		
03	Outdoor Lighting Zone per Title 24 Part 1 10.114 or as designated by Authority Having Jurisdiction (AHJ):			
☐	LZ-0: Very Low - Undeveloped Parkland	☐ LZ-2: Moderate - Urban Clusters	☐ LZ-4: High - Must be reviewed by CA Energy Commission for Approval	
☐	LZ-1: Low - Rural Areas	☒ LZ-3: Moderately High - Urban Areas		
05	Occupancy Types within Project			
● Support Areas ● All Other Occupancies				

B. PROJECT SCOPE

This table includes outdoor lighting systems that are within the scope of the permit application and are demonstrating compliance using the prescriptive path outlined in 140.7 / 170.2(e)6 or 141.0(b)2L / 180.2(b)4Bv for alterations.

My Project Consists of:

01	02	
☒ New Lighting System	Must Comply with Allowances from 140.7 / 170.2(e)6	
☐ Altered Lighting System	Is your alteration increasing the connected lighting load (Watts)?	○ Yes ○ No
03	04	05
% of Existing Luminaires Being Altered[1]	Sum Total of Luminaires Being Added or Altered	Calculation Method
☐ < 10% ☐ >= 10% and < 50% ☐ >= 50%		

Please proceed to Table F. Outdoor Lighting Fixture Schedule to define the project's luminaires.

[1] FOOTNOTES: % of Existing Luminaires Being Altered = (Sum Total of Luminaires Being Added or Altered / Existing Luminaires within the Scope of the Permit Application) x 100.

STATE OF CALIFORNIA
Outdoor Lighting
CALIFORNIA ENERGY COMMISSION

CERTIFICATE OF COMPLIANCE		NRCC-LTO-E
Project Name: HIGHLAND CAFETERIA	**Report Page:**	**(Page 2 of 7)**
	Date Prepared:	5/2/2024

C. COMPLIANCE RESULTS

Results in this table are automatically calculated from data input and calculations in Tables F through N. Note: If any cell on this table says "COMPLIES with Exceptional Conditions" refer to Table D. Exceptional Conditions for guidance or see applicable Table referenced below.

Calculations of Total Allowed Lighting Power (Watts) 140.7 / 170.2(e)6 or 141.0(b)2L / 180.2(b)4Bv														Compliance Results		
01		02		03		04		05		06		07		08	09
General Hardscape Allowance 140.7(d1) / 170.2(e)6 (See Table I)	+	Per Application 140.7(d)2 / 170.2(e)6 (See Table J)	+	Sales Frontage 140.7(d)2 (See Table K)	+	Ornamental 140.7(d)2 / 170.2(e)6 (See Table L)	+	Per Specific Area 140.7(d)2 / 170.2(e)6 (See Table M)	OR	Existing Power Allowance 141.0(b)2L / 180.2(b)4Bv (See Table N)	=	**Total Allowed** (Watts)	≥	**Total Actual** (Watts)	**07 must be >= 08**
336	+	---	+	---	+	---	+	---	OR	---	=	336	≥	324	COMPLIES
Shielding Compliance (See Table G for Details)															N/A
Controls Compliance (See Table H for Details)															COMPLIES

D. EXCEPTIONAL CONDITIONS

This table is auto-filled with uneditable comments because of selections made or data entered in tables throughout the form.

E. ADDITIONAL REMARKS

This table includes remarks made by the permit applicant to the Authority Having Jurisdiction.

STATE OF CALIFORNIA
Outdoor Lighting
CALIFORNIA ENERGY COMMISSION

CERTIFICATE OF COMPLIANCE		NRCC-LTO-E
Project Name: HIGHLAND CAFETERIA	**Report Page:**	**(Page 3 of 7)**
	Date Prepared:	5/2/2024

F. OUTDOOR LIGHTING FIXTURE SCHEDULE

For new or altered lighting systems demonstrating compliance with 140.7 / 170.2(e)6 all new luminaires being installed and any existing luminaires remaining or being moved within the spaces covered by the permit application are included in the Table below. For altered lighting systems using the Existing Power method per 141.0(b)2L only new luminaires being installed and replacement luminaires being installed as part of the project scope are included (ie, existing luminaires remaining or existing luminaires being moved are not included). Outdoor lighting attached to multifamily buildings and controlled from the inside of a dwelling unit are included in Table H. and are not included here. All other multifamily outdoor lighting is included here.

Designed Wattage:

01	02		03	04	05	06	07	08	09	10	
Name or Item Tag	Complete Luminaire Description		Watts per luminaire[1, 2]	How is Wattage determined	Total Number Luminaires[2]	Luminaire Status[3]	Excluded per 140.7(a) / 170.2(e)6A	Design Watts	Cutoff Req. > 6,200 initial lumen output 130.2(b) / 160.5(c)1[4]	Field Inspector	
										Pass	Fail
S	18 WATT LED	☐ Linear	18	Mfr. Spec	18	New	☐	324	NA: < 6200 lumens	☐	☐
								Total Design Watts:	324		

** NOTES: Selections with a * require a note in the space below explaining how compliance is achieved.*
EX: Luminaire is lighting a statue; EXCEPTION 2 to 130.2(b)

[1]FOOTNOTES: Authority Having Jurisdiction may ask for Luminaire cut sheets to confirm wattage used for compliance per 130.0(c) / 160.5(b)
[2] For linear luminaires, wattage should be indicated as W/lf instead of Watts/luminaire. Total linear feet should be indicated in column 05 instead of number of luminaires.
[3] Select "New" for new luminaires in a new outdoor lighting project, or for added luminaires in an alteration. Select "Altered" for replacement luminaires in an alteration. Select "Existing to Remain" for existing luminaires within the project scope that are not being altered and are remaining. Select "Existing Reinstalled" for existing luminaires which are being removed and reinstalled as part of the project scope.
[4] Compliance with mandatory shielding requirements is required for luminaires with initial lumen output >= 6,200 unless exempted by 130.2(b)/ 160.5(c)

G. SHIELDING REQUIREMENTS (BUG)

This section does not apply to this project.

STATE OF CALIFORNIA
Outdoor Lighting
CALIFORNIA ENERGY COMMISSION

CERTIFICATE OF COMPLIANCE		NRCC-LTO-E
Project Name: HIGHLAND CAFETERIA	**Report Page:**	**(Page 4 of 7)**
	Date Prepared:	5/2/2024

H. OUTDOOR LIGHTING CONTROLS

This table demonstrates compliance with controls requirements for all new or altered luminaires installed as part of the permit application. For alteration projects, luminaires which are existing to remain (ie untouched) and luminaires which are removed and reinstalled (wiring only) do not need to be included in this table even if they are within the spaces covered by the permit application.
Outdoor lighting for nonresidential buildings, parking garages and common service areas in multifamily buildings must be documented separately from outdoor lighting attached to multifamily buildings and controlled from the inside of a dwelling unit

Mandatory Controls for Nonresidential Occupancies, Parking Garages & Common Areas in Multifamily Buildings

01	02	03	04	05	
Area Description	Shut-Off 130.2(c)1 / 160.5(c)	Auto-Schedule 130.2(c)2 / 160.5(c)	Motion Sensor 130.2(c)3 / 160.5(c)	Field Inspector	
				Pass	Fail
SOFFIT	Astronomical Timer	Provided	NA: Each Luminaire <= 40 Watts	☐	☐

[1]FOOTNOTE: Text has been abbreviated, please refer to Table 160.5-A to confirm compliance with the specific light source technologies listed.
[2]Authority having jurisdiction may ask for cutsheets or other documentation to confirm compliance of light source.
[3]Recessed luminaires marked for use in fire-rated installations, and recessed luminaires installed in non-insulated ceilings are excepted from ii and iii.

STATE OF CALIFORNIA
Outdoor Lighting
CALIFORNIA ENERGY COMMISSION

CERTIFICATE OF COMPLIANCE		NRCC-LTO-E
Project Name: HIGHLAND CAFETERIA	**Report Page:**	**(Page 5 of 7)**
	Date Prepared:	5/2/2024

I. LIGHTING POWER ALLOWANCE (per 140.7 / 170.2(e))

This table includes areas using allowance calculations per 140.7 / 170.2(e). General Hardscape Allowance is per Table 140.7-A/Table 170.2-R while "Use it or lose it" Allowances are per Table 140.7-B /Table 170.2-S. Indicate which allowances are being used to expand sections for user input. Luminaires that qualify for one of the "Use it or lose it" allowances shall not qualify for another "Use it or lose it" allowance.
Outdoor lighting attached to multifamily buildings and controlled from the inside of a dwelling unit are included in Table H. and are not included here. All other multifamily outdoor lighting is included here.

	01			
	"Use it or lose it" Allowance (select all that apply) (select all that apply)			
☒ General Hardscape Allowance Table I (below)	☐ Per Application Table J	☐ Sales Frontage Table K	☐ Ornamental Table L	☐ Per Specific Area Table M

Calculated General Hardscape Lighting Power Allowance per Table 140.7-A for Nonresidential & Hotel/Motel

02	03	04	05	06	07	08	09
Area Description	Area Wattage Allowance (AWA)			Linear Wattage Allowance (LWA)			Total General AWA + LWA (Watts)
	Illuminated Area (ft^2)	Allowed Density (W/ft^2)	Area Allowance (Watts)	Perimeter Length (lf)	Allowed Density (W/lf)	Linear Allowance (Watts)	
PEDESTRIAN HARDSCAPE	4102	0.021	86.1	0	0.2	0	86
Initial Wattage Allowance for Entire Site (Watts):							250
Instances of Initial Wattage Allowance (LZ 0 only)[1]							
Total General Hardscape Allowance (Watts):							336

J. LIGHTING ALLOWANCE: PER APPLICATION

This section does not apply to this project.

K. LIGHTING ALLOWANCE: SALES FRONTAGE

This section does not apply to this project.

L. LIGHTING ALLOWANCE: ORNAMENTAL

This section does not apply to this project.

STATE OF CALIFORNIA
Outdoor Lighting
CALIFORNIA ENERGY COMMISSION

CERTIFICATE OF COMPLIANCE		NRCC-LTO-E
Project Name: HIGHLAND CAFETERIA	**Report Page:**	**(Page 6 of 7)**
	Date Prepared:	5/2/2024

M. LIGHTING ALLOWANCE: PER SPECIFIC AREA

This section does not apply to this project.

N. EXISTING CONDITIONS POWER ALLOWANCE (alterations only)

This section does not apply to this project.

O. DECLARATION OF REQUIRED CERTIFICATES OF INSTALLATION

Selections have been made based on information provided in this document. If any selection has been changed by permit applicant, an explanation should be included in Table E. Additional Remarks. These documents must be provided to the building inspector during construction and can be found online

Form/Title
NRCI-LTO-E - Must be submitted for all buildings

P. DECLARATION OF REQUIRED CERTIFICATES OF ACCEPTANCE

Selections have been made based on information provided in this document. If any selection has been changed by permit applicant, an explanation should be included in Table E. Additional Remarks. These documents must be provided to the building inspector during construction and must be completed through an Acceptance Test Technician Certification Provider (ATTCP). For more information visit: http://www.energy.ca.gov/title24/attcp/providers.html

Form/Title	Systems/Spaces To Be Field Verified
NRCA-LTO-02-A - Must be submitted for all outdoor lighting controls except for alterations where controls are added to <= 20 luminaires.	SOFFIT;

STATE OF CALIFORNIA
Outdoor Lighting
CALIFORNIA ENERGY COMMISSION

CERTIFICATE OF COMPLIANCE		NRCC-LTO-E
Project Name: HIGHLAND CAFETERIA	**Report Page:**	**(Page 7 of 7)**
Project Address: 2900 ROYAL SCOTS WAY	**Date Prepared:**	5/2/2024

DOCUMENTATION AUTHOR'S DECLARATION STATEMENT

I certify that this Certificate of Compliance documentation is accurate and complete.

Documentation Author Name: Davor P. Golik PE	Documentation Author Signature: Davor P. Golik
Company: DPG Engineering, Inc.	Signature Date: 2024-05-02
Address: 6702 N CEDAR	CEA/ HERS Certification Identification (if applicable): E17151
City/State/Zip: FRESNO CA 93710	Phone: 559 276 5144

RESPONSIBLE PERSON'S DECLARATION STATEMENT

I certify the following under penalty of perjury, under the laws of the State of California:
1. The information provided on this Certificate of Compliance is true and correct.
2. I am eligible under Division 3 of the Business and Professions Code to accept responsibility for the building design or system design identified on this Certificate of Compliance (responsible designer)
3. The energy features and performance specifications, materials, components, and manufactured devices for the building design or system design identified on this Certificate of Compliance conform to the requirements of Title 24, Part 1 and Part 6 of the California Code of Regulations.
4. The building design features or system design features identified on this Certificate of Compliance are consistent with the information provided on other applicable compliance documents, worksheets, calculations, plans and specifications submitted to the enforcement agency for approval with this building permit application.
5. I will ensure that a completed signed copy of this Certificate of Compliance shall be made available with the building permit(s) issued for the building, and made available to the enforcement agency for all applicable inspections. I understand that a completed signed copy of this Certificate of Compliance is required to be included with the documentation the builder provides to the building owner at occupancy.

Responsible Designer Name: DAVOR P GOLIK P.E.	Responsible Designer Signature: Davor P. Golik
Company: DPG ENGINEERING	Date Signed: 2024-05-02
Address: 6702 N CEDAR #205	License: E17151
City/State/Zip: FRESNO CA 93710	Phone: 559 276 5144

IDENTIFICATION STAMP
DIV. OF THE STATE ARCHITECT
APP: 03-122528 INC:
REVIEWED FOR
SS ☑ FLS ☑ ACS ☑
DATE: 01/06/2025

PTN: 63529-385 FILE: 15-H3

HIGHLAND HIGH SCHOOL
CAFETERIA REHABILITATION AND MODERNIZATION
2900 ROYAL SCOTS WAY
FOR
KERN HIGH SCHOOL DISTRICT
BAKERSFIELD, KERN COUNTY, CALIFORNIA

SCARCHITECT inc.
1601 NEW STINE ROAD, SUITE 280
BAKERSFIELD, CA 93309
PH: (661) 397-4377
FAX: (661) 397-4378
WWW.SCARCHITECT.COM
LICENSED ARCHITECT STEPHEN J. CORBIN No. C-16768 Exp. 12/31/24 STATE OF CALIFORNIA
STEPHEN J. CORBIN, NCARB, AIA, LEED ®-AP

CHECK AND VERIFY ALL DIMENSIONS BEFORE PROCEEDING WITH THE WORK. REPORT DISCREPANCIES TO THE ARCHITECT. ALL CONSTRUCTION SHALL CONFORM TO THE C.B.C.

DPG Engineering Inc.
6702 N. Cedar Suite 205
Fresno, Ca. 93710
Ph. (559) 276-5144
Fax (559) 900-4929
Email @ dpgengineering.com
REGISTERED PROFESSIONAL ENGINEER DAVOR P. GOLIK No. E17151 ELECTRICAL STATE OF CALIFORNIA

TITLE 24
OUTDOOR

MARK	DATE	REVISIONS
1		
2		
3		

JOB NO. 1319
DRAWN: R.L.M.
CHECKED: D.P.G.
DATE: 4/2/24

5.01
OF SHEETS

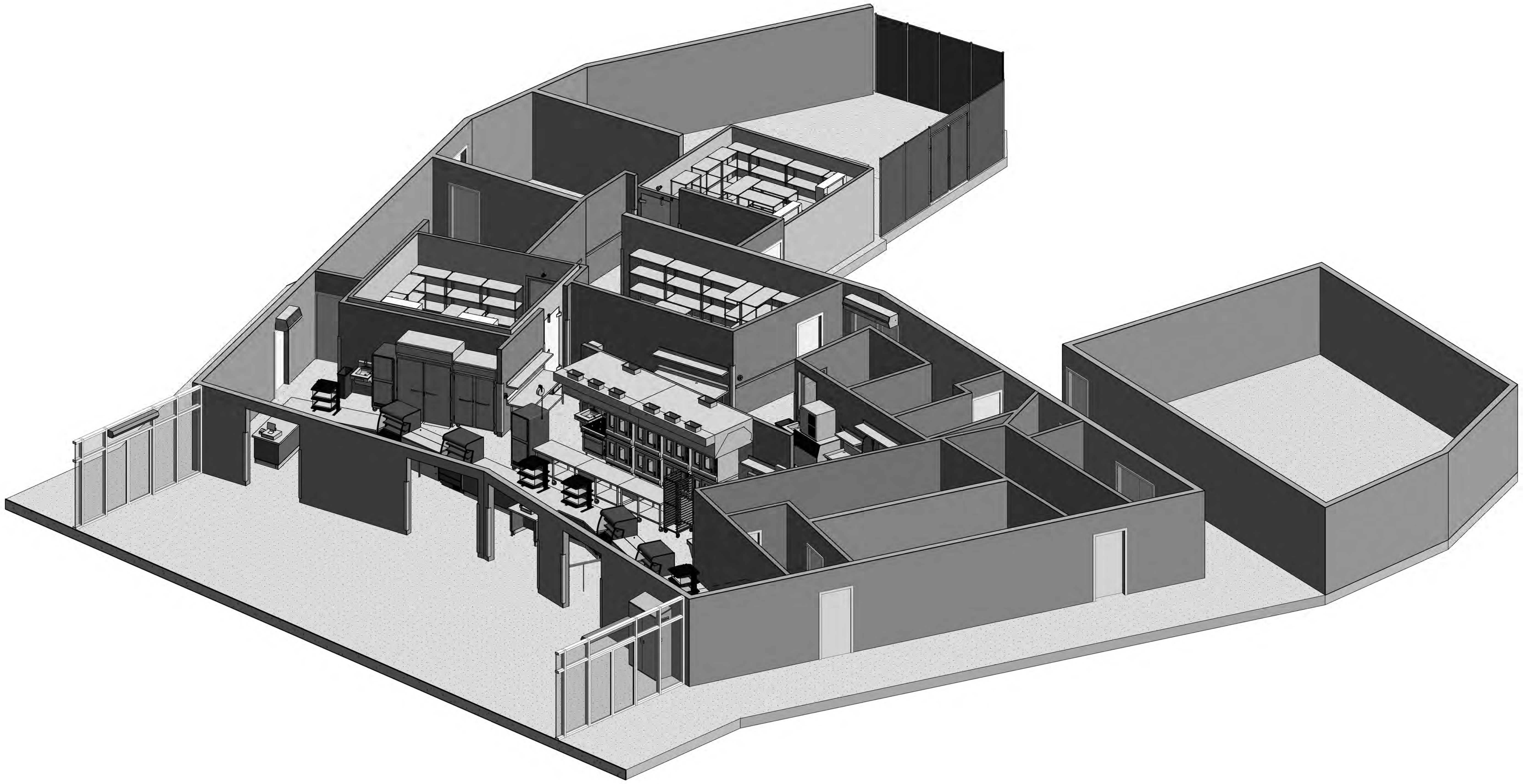

ricca design STUDIOS
creating what's next in culinary design

Sheet Number	Sheet Name	05/18/2022 - 50% Working Drawing	06/20/2022 - 80% Working Drawings	07/07/2022 - DSA Submittal	08/03/2022 - 100% Working Drawing	08/15/2022 - 100% CD	08/15/2023 - DSA Issue	12/19/2023 - DSA Resubmittal	05/20/2023 - DSA V2 Submittal	09/20/2023 - DSA V2 Submittal
QF000-1	Index Sheet	X	X	X	X	X	X	X	X	X
QF100-1	Foodservice Key Plan	X	X	X	X	X	X	X	X	X
QF400-1A	Foodservice Equipment Plan	X	X	X	X	X	X	X	X	X
QF400-1B	Foodservice Equipment Schedule	X	X	X	X	X	X	X	X	X
QF400-1C	Foodservice 3D Views	X	X	X	X	X	X	X	X	X
QF400-2A	Foodservice Utility Schedule	X	X	X	X	X	X	X	X	X
QF400-2B	Foodservice Utility Schedule	X	X	X	X	X	X	X	X	X
QF400-3	Foodservice Building Conditions & Ventilation Plan	X	X	X	X	X	X	X	X	X
QF400-4	Foodservice Plumbing Plan	X	X	X	X	X	X	X	X	X
QF400-5	Foodservice Electrical Plan	X	X	X	X	X	X	X	X	X
QF500-1	Foodservice Elevations		X	X	X	X	X	X	X	X
QF500-2	Foodservice Elevations		X	X	X	X	X	X	X	X
QF500-3	Foodservice Elevations				X	X	X	X	X	X
QF501-1	Foodservice Details & Sections	X	X	X	X	X	X	X	X	X
QF501-2	Foodservice Details & Sections			X	X	X	X	X	X	X
QF501-3	Foodservice Details & Sections			X	X	X	X	X	X	X
QF501-4	Foodservice Details & Sections					X	X	X	X	X
QF501-5	Foodservice Details & Sections	X	X	X	X	X	X	X	X	X
QF700-1	Foodservice Refrigeration System Details	X	X	X	X	X	X	X	X	X
QF701-1	Foodservice Walk-In Refrigerator Details		X	X	X	X	X	X	X	X
QF701-2	Foodservice Walk-In Freezer Details		X	X	X	X	X	X	X	X

ABBREVIATIONS

ADA	Americans with Disabilities Act	EC	Electrical Contractor/Division	LEC	Laundry Equipment Contractor	PRV	Pressure Regulating/Reducing Valve
ADJ	Adjustable	EE	Electrical Engineer	LC	Load Center	PSI	Pounds-Per-Square-Inch
AMP	Amperage	EM	Emergency Power	LF	Linear Foot (or Feet)		
AFF	Above Finished Floor	EQ	Equal	LPH	Liters per Hour	QT	Quart
ALT	Alternate	EQUIP	Equipment	LPG	Liquid Propane Gas	QTY	Quantity
		ETR	Existing to Remain				
BFD	Backflow Prevention Device	ETL	Listing Equal to UL (Intertek)	MBH	Thousand British Thermal Units Per Hour	RAD	Radius
BFF	Below Finished Floor	EXH	Exhaust	MC	Mechanical Contractor/Mechanical Division	RCP	Receptacle
BHP	Boiler Horsepower	EXIST	Existing	ME	Mechanical Engineer		
BOH	Back of House			MFR	Manufacturer	SC	Self-Contained
BTC	Branch to Connection	°F	Degree Fahrenheit	MIN	Minimum	SF	Square Foot (or Feet)
BTU	British Thermal Unit	FAB	Fabricated	MISC	Miscellaneous	SP	Static Pressure
BTUH	British Thermal Unit Per Hour	FD	Floor Drain	MOB	Mobile	SPEC	Specifications
		FFD	Funnel Floor Drain	MUA	Make-Up Air	SST	Stainless Steel
C	Degree Centigrade (note, need "degree" symbol in front of C)	FP	Fire Protection	MTD	Mounted	STD	Standard
CFH	Cubic Feet Per Hour	FPM	Feet Per Minute			SW	Switch
CFM	Cubic Feet Per Minute	FR	From	N2	Compressed Nitrogen Gas	SYS	System
CHR	Chilled or Condenser Water Return	FS	Floor Sink	NA	Not Applicable		
CHS	Chilled or Condenser Water Supply			NIC	Not in Contract	TDO	Tangent Draw-Off
CLG	Ceiling	GA	Gauge	NIKEC	Not in Kitchen Equipment Contract	TLS	Table Limit Switch
C02	Compressed Carbon Dioxide Gas	GAL	Gallon	NSF	National Sanitation Foundation	TYP	Typical
CONN	Connection	GC	General Contractor				
CONV	Convenience Receptacle	GFCI	Ground Fault Circuit Interrupter	OC	On-Center	UDS	Utility Distribution System
CW	Cold Water	GPH	Gallon(s) Per Hour	OFI	Owner or Operator Furnished Item	UL	Underwriters Laboratory
		GPM	Gallon(s) Per Minute	OFCI	Owner or Operator Furnished/Contractor Installed	UV	Ultraviolet
DCR	Duplex Convenience Receptacle			OFOI	Owner or Operator Furnished/Owner or Operator Installed		
DCV	Demand Control Ventilation	HVAC	Heating Ventilation & Air Conditioning			V	Volt
DEG	Degree (or Degrees)	HW	Hot Water	PB	Pull Box	VAV	Variable Air Volume
DFA	Down From Above	HZ	Hertz	PC	Plumbing Contractor/Plumbing Division	VD	Volume Damper
DIA	Diameter			PE	Plumbing Engineer	VFD	Variable Frequency Drive
DIM	Dimension	IW	Indirect Waste	PH	Phase	VIF	Verify in Field
DISC	Disconnect			POB	Part of Building		
DWG	Drawing	JB	Junction Box	POC	Point of Connection	W	Watts
DW	Direct Waste			POF	Part of Fixture	WC	Water Column
		KEC	Kitchen Equipment Contractor	POS	Point of Sale		
EA	Each	KCAL	Kilocalorie	POT	Portable		
		KW	Kilowatt	PREP	Preparation		

NOTE: REFER TO ARCHITECTURAL / MECHANICAL / ELECTRICAL / PLUMBING / INTERIOR DESIGN DRAWINGS FOR ADDITIONAL ABBREVIATIONS SHOWN ON FOODSERVICE DRAWINGS BUT NOT INCLUDED IN THIS LIST.

TYPICAL HEALTH/HYGIENE-AUTHORITY FIT-OUT REQUIREMENTS

What follows are typical requirements from review authorities within food/beverage storage, preparation and service zones. These are offered for reference-only and do not necessarily constitute design or construction direction from Ricca Design Studios.

- Flooring surfaces/systems should be smooth, non-slip with commercial-grade durability, made of non-absorbent material, and easily cleanable in all the following zones:
- where food is prepared, packaged or stored
- where utensils are washed
- where refuse is stored
- within janitor rooms
- within washroom and hand washing areas
- Flooring surfaces should be coved at the intersection of the floor and wall with 3/8" (10mm) minimum radius and should extend up the wall minimum of six inches (6" or 152mm) in all foodservice rooms/zones. Mastic-applied vinyl is not acceptable.
- Floor drains should be installed in culinary zones for general area cleaning. Additional drains should be installed in floors that are more frequently sprayed-down in the cleaning process. Flooring should be sloped to the drain 1/16" (2mm) per foot within a six-foot (6' or 1.8 M) radius.
- Wall and ceiling finishes within all foodservice rooms/zones where food is stored in unopened containers, and in dining and sales areas should be durable, smooth, non-absorbent, impervious and washable. Wall and ceiling finishes within food preparation and utensil washing areas should be light-colored with durability equal to demand. Wall finishes on interior surfaces of walk-in refrigeration cavities should also be light-colored with durability equal to demand. Cement board with Fiberglass Reinforced Panel finish is typical minimum wall finish in all preparation/wash-up zones. Wall areas adjacent to bar sinks should be smooth and easily cleanable. Conduits of all types should be installed within walls; when installed on surface of walls, they should be shrouded to facilitate ease of cleaning.
- Lighting in every zone where food is prepared, processed or packaged or where utensils are cleaned should be provided in an intensity of no less than 50 foot candles as measured 30" (762mm) above the finished floor, except the working surfaces of bars and bar work-boards where at least 10 foot-candles of light are required. Required light source must be shrouded with shatter-proof covers.
- Exhaust ventilation should be provided at or above all electric or gas cooking equipment and dishwashers that utilize hot water or chemicals for sanitization per local, regional and national code. Exhaust ventilation may be required above hot beverage equipment – confirm with local code. Washrooms, dressing rooms should be vented to the atmosphere by means of an openable, screened window, and air shaft or switch-activated exhaust fan per local building codes.
- Foodservice facility should be constructed, and maintained and operated to prevent entrance of animals, birds and vermin including rodents and insects.
- Delivery Doors leading to the exterior should be self-closing and open outward. Vestibules are typically required where large double-doors may enter-into a food preparation area. All exterior doors should be provided with an overhead air curtain, air curtain should produce a downward and outward airflow not less than three inches (3" of 75mm) thick at the nozzle with an air velocity no less than 1600FPM across entire opening.
- Circulation- minimum of thirty-six inches (36" or 914mm) is required for all aisles and working areas within foodservice and beverage preparation zones.
- Hand Washing sinks with single-use towels and hand cleanser should be provided within, or adjacent to, washrooms and should be equipped with an adequate supply of hot/cold running water. A dedicated hand washing station should be provided within each food preparation zone.
- Washrooms for use by foodservice employees should be provided and should be fit-out with self-closing doors.
- Ware Washing machines using hot water or chemical sanitizing rinse must conform to applicable National Sanitation Foundation (NSF) standards and shall be installed and operated in accordance with those standards.
- Refrigeration cavities must be equipped with a thermometer that is easily-readable and in proper working condition.
- Equipment installation- all equipment must meet National Sanitation Foundation (NSF) design and installation requirements. All foodservice equipment should be easily moveable, light enough to be easily-moved by one (1) person or installed on a raised minimum six inches (6" or 152mm) rounded stainless steel legs or sealed to a minimum four inches (4" or 101mm) stainless steel or galvanized steel channel base filled with lightweight concrete with minimum 3/8" (10mm) coved radius. If on an island, equipment should overhang the base at least three inches (3" or 75mm), but not more than the height of the base. Sealing to the finished floor is acceptable for equipment designed to be on level with floor such as roll-in refrigerator/freezers, large blast chiller/freezers, roll-in ovens and proofers.

Gaps between equipment base and top of channel base should be sealed with non-hardening silicone sealant. All equipment on counters, tables and shelves that are not easily moved are to be installed on approved four inch (4" of 101mm) legs or sealed to table, shelf, etc. (Verify with local code). All fabricated equipment, flashing, and back splashes must be sealed to walls and abutting equipment or moved away from adjacent fabricated equipment minimum of three inches (3" or 75 mm) or adjacent wall minimum of six inches (6" or 152mm). Dipper wells with running water should be provided for ice cream/frozen dessert with scooping required.

IDENTIFICATION STAMP
DIV. OF THE STATE ARCHITECT
APP: 03-122528 INC:
REVIEWED FOR
SS ☑ FLS ☑ ACS ☑
DATE: 01/06/2025

PTN: 63529-385 FILE: 15-H3

HIGHLAND HIGH SCHOOL
CAFETERIA REHABILITATION AND MODERNIZATION
2900 ROYAL SCOTS WAY
FOR
KERN HIGH SCHOOL DISTRICT
BAKERSFIELD, KERN COUNTY, CALIFORNIA

SC ARCHITECT inc.
1601 NEW STINE ROAD, SUITE 280
BAKERSFIELD, CA 93309
PH: (661) 397-4377
FAX: (661) 397-4378
WWW.SCARCHITECT.COM

LICENSED ARCHITECT STEPHEN J. CORBIN No. C-16786 REN. 11/30/25 STATE OF CALIFORNIA
STEPHEN J. CORBIN, NCARB, AIA, LEED ®AP

CHECK AND VERIFY ALL DIMENSIONS BEFORE PROCEEDING WITH THE WORK. REPORT DISCREPANCIES TO THE ARCHITECT. ALL CONSTRUCTION SHALL CONFORM TO THE C.B.C.

ricca design STUDIOS
5613 DTC Parkway | Suite 100
Greenwood Village, CO 80111
303.221.0500
www.ricca.com

Index Sheet

MARK	DATE	REVISIONS
1		
2		
3		

JOB NO. 22075
DRAWN: Ricca
CHECKED: Ricca
DATE: 09/20/2024

QF000-1
1 OF 21 SHEETS

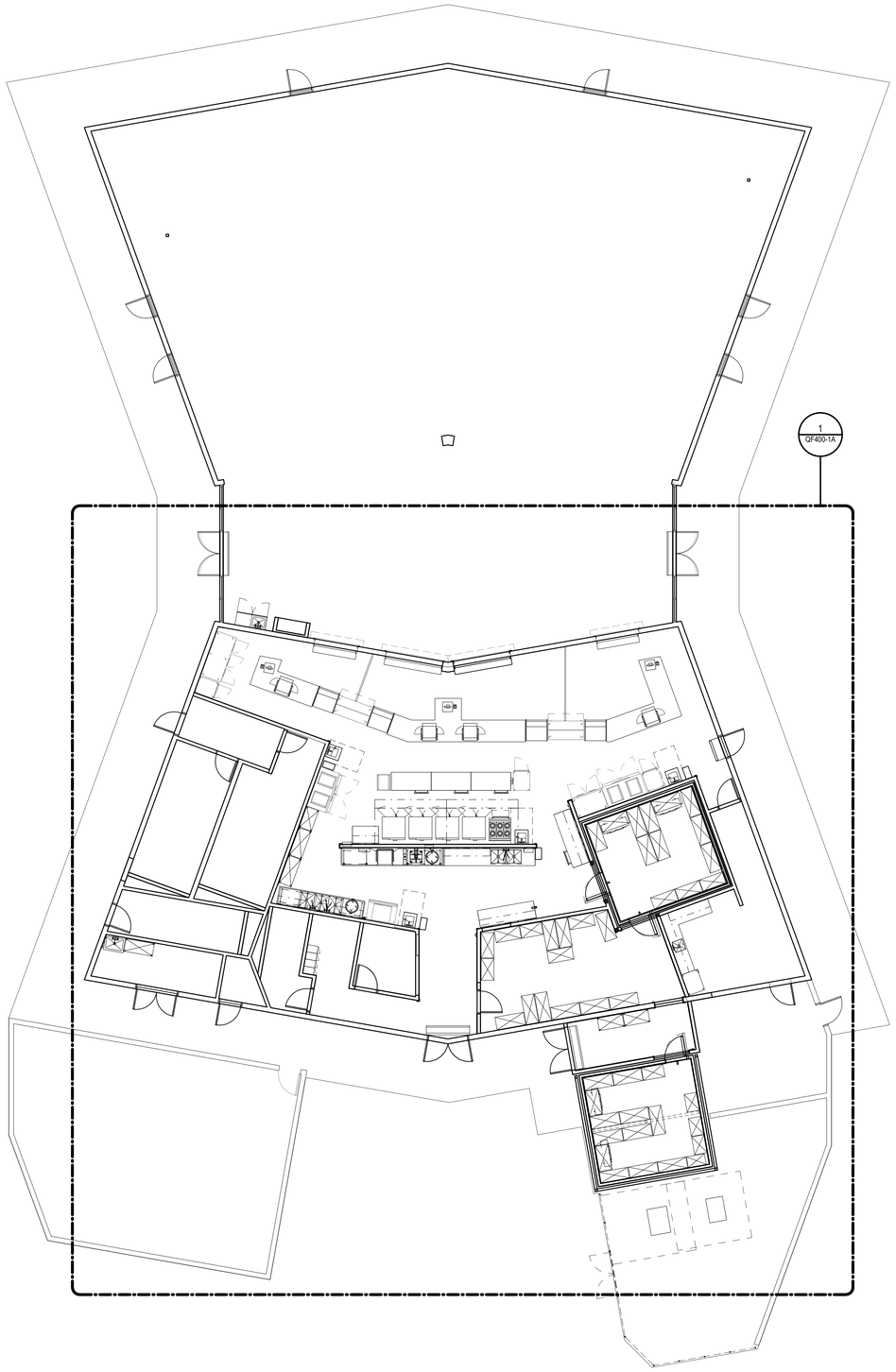

TRUE NORTH

PLAN NORTH

1 Level 1 Key Plan
SCALE: 1/8" = 1'-0"

IDENTIFICATION STAMP
DIV. OF THE STATE ARCHITECT
APP: 03-122528 INC:
REVIEWED FOR
SS ☑ FLS ☑ ACS ☑
DATE: 01/06/2025

PTN: 63529-385 FILE: 15-H3

HIGHLAND HIGH SCHOOL
CAFETERIA REHABILITATION AND MODERNIZATION
2900 ROYAL SCOTS WAY
FOR
KERN HIGH SCHOOL DISTRICT
BAKERSFIELD, KERN COUNTY, CALIFORNIA

ARCHITECT S inc.
1601 NEW STINE ROAD, SUITE 280
BAKERSFIELD, CA 93309
PH: (661) 397-4377
FAX: (661) 397-4378
WWW.SCARCHITECT.COM

LICENSED ARCHITECT
STEPHEN J. CORBIN
C-18185
REN: 12/31/25
STATE OF CALIFORNIA

STEPHEN J. CORBIN, NCARB, AIA, LEED ®AP

CHECK AND VERIFY ALL DIMENSIONS BEFORE PROCEEDING WITH THE WORK. REPORT DISCREPANCIES TO THE ARCHITECT. ALL CONSTRUCTION SHALL CONFORM TO THE C.B.C.

ricca design STUDIOS
5613 DTC Parkway | Suite 100
Greenwood Village, CO 80111
303.221.0500
www.ricca.com

Foodservice Key Plan

MARK	DATE	REVISIONS
1		
2		
3		

JOB NO. 22075
DRAWN: Ricca
CHECKED: Ricca
DATE: 09/20/2024

QF100-1
2 OF 21 SHEETS

Equipment Plan Symbol Legend

EQUIPMENT TAG — SEE SCHEDULE ON SHEET QF 400-1B

PLAN NORTH

TRUE NORTH

1 Level 1 Equipment Plan
SCALE: 1/4" = 1'-0"

IDENTIFICATION STAMP
DIV. OF THE STATE ARCHITECT
APP: 03-122528 INC:
REVIEWED FOR
SS ☑ FLS ☑ ACS ☑
DATE: 01/06/2025

PTN: 63529-385 FILE: 15-H3

HIGHLAND HIGH SCHOOL

CAFETERIA REHABILITATION AND MODERNIZATION

2900 ROYAL SCOTS WAY
FOR
KERN HIGH SCHOOL DISTRICT
BAKERSFIELD, KERN COUNTY, CALIFORNIA

ARCHITECT INC.
1601 NEW STINE ROAD, SUITE 280
BAKERSFIELD, CA 93309
PH: (661) 397-4377
FAX: (661) 397-4378
WWW.SCARCHITECT.COM

LICENSED ARCHITECT STEPHEN J. CORBIN No. C-16762 Exp. 12/31/24 CALIFORNIA

STEPHEN J. CORBIN, NCARB, AIA, LEED ®-AP

CHECK AND VERIFY ALL DIMENSIONS BEFORE PROCEEDING WITH THE WORK. REPORT DISCREPANCIES TO THE ARCHITECT. ALL CONSTRUCTION SHALL CONFORM TO THE C.B.C.

ricca design STUDIOS
5613 DTC Parkway | Suite 100
Greenwood Village, CO 80111
303.221.0500
www.ricca.com

Foodservice Equipment Plan

MARK	DATE	REVISIONS
1		
2		
3		

JOB NO. 22075
DRAWN: Ricca
CHECKED: Ricca
DATE: 09/20/2024

QF400-1A

Foodservice Equipment Schedule - (A)

Item Number	Qty	Description	Remarks	Height	Weight	Manufacturer	Model
A1	2	Air Curtain, Unheated		84"	58 lbs	Mars Air Systems	LPV272-1U
A2	1	Mop Sink Cabinet		84"	378 lbs	Advance Tabco	9-OPC-84DL-300
A2.1	1	Service Faucet		36"	8 lbs	T&S Brass	B-0655-01
A3	1	Refrigerator, Reach-In	Existing, By Owner	83"	691 lbs	Owner Furnished	Contractor Installed
A4	3	Hot Holding Cabinet	Existing, By Owner	73"	686 lbs	Owner Furnished	Contractor Installed
A4.1	1	Retractable Drop Cord	By EC			By EC	NIKEC
A5	1	Stainless Steel Serving Counter	Fabricated	34"	909 lbs	Fabricated	Stainless Steel
A6	3	POS System	By Owner	38"	25 lbs	By Owner	NIKEC
A7	4	Heated Zone Merchandiser		32"	176 lbs	Hatco Corporation	HZMH-24D
A8	4	Grab-N-Go Case, Refrigerated	Mobile	60"	590 lbs	Federal Industries	RSSM-360SC
A9	1	Spare Number					
A10	1	Spare Number					
A11	2	Milk Refrigerator	Existing, By Owner, Mobile	39.5"	458 lbs	Owner Furnished	Contractor Installed
A12	1	Stainless Steel Serving Counter	Fabricated	34"	2587.5 lbs	Fabricated	Stainless Steel
A13	1	Stainless Steel Serving Counter	Fabricated	34"	2242.5 lbs	Fabricated	Stainless Steel
A14	4	Hand Sink	With Soap And Towel Dispenser	34"	55 lbs	Eagle Group	HSAP-14-ADA-FW
A15	4	Trash Receptacle, 23 Gallon	By Owner, Mobile	27"		By Owner	NIKEC
A16	1	Air Curtain		84"	60 lbs	Mars	NH236-1UA-TS
A17	1	Refrigerator, Roll-In	Existing, By Owner	89"	685 lbs	Owner Furnished	Contractor Installed
A18	5	Pan Rack Cart	Existing, By Owner, Mobile	69 1/4"		Owner Furnished	Contractor Installed
A19	1	Spare Number					
A20	19	Corner Guard		60"	10 lbs	Fabricated	Stainless Steel
A21	1	Refrigerator, Reach-In	Existing, By Owner, Mobile	83"	745 lbs	Owner Furnished	Contractor Installed
A22	1	Freezer, Roll-In	Existing, By Owner	89"	685 lbs	Owner Furnished	Contractor Installed
A23	3	Work Table, Mobile	Mobile, Fabricated, With Drawers	36"	200 lbs	Fabricated	Stainless Steel
A24	1	Work Table	Fabricated	36"	200 lbs	Fabricated	Stainless Steel
A25	1	Wall Shelf, Single With Concealed Brackets	Fabricated	58"	90 lbs	Fabricated	Stainless Steel
A26	4	Corner Guard	Fabricated, U Shape	60"	10 lbs	Fabricated	Stainless Steel
A27	1	Exhaust Hood With MUA	By Mechanical			By Mechanical	Contractor Installed
A27.1	1	Fire Suppression System, Wall Mounted	By Mechanical			By Mechanical	Contractor Installed
A27.2	1	Hood Control Panel	By Mechanical			By Mechanical	Contractor Installed
A28	4	Convection Oven, Double		78"	1397 lbs	Montague Company	2-115A
A29	1	Spare Number					
A30	1	Spare Number					
A31	1	Wall Flashing	Fabricated	74"	184 lbs	Fabricated	Stainless Steel
A32	1	Range, 6-Burner With Standard Oven		40"	536 lbs	Montague	136-5
A33	1	Work Table	Fabricated	36"	200 lbs	Fabricated	Stainless Steel
A34	1	Wall Shelf, Single With Concealed Brackets	Fabricated	58"	196 lbs	Fabricated	Stainless Steel
A35	1	Work Table With Sinks	Fabricated	36"	375 lbs	Fabricated	Stainless Steel
A36	1	Wall Shelf, Single With Concealed Brackets	Fabricated	58"	170 lbs	Fabricated	Stainless Steel
A37	1	Wall Flashing	Fabricated	74"	224 lbs	Fabricated	Stainless Steel
A38	3	Trash Receptacle With Dolly	Mobile	27"	10 lbs	Rubbermaid	FG262000GRAY
A39	1	Hose Reel		60"	46 lbs	T&S Brass	B-7122-C01
A39.1	1	Hose Reel Control Cabinet				T&S Brass	B-2339-LR
A40	2	Chemical Dispensing System	By Purveyor			By Purveyor	NIKEC
A41	1	Soiled Dish Table	Fabricated	36"	250 lbs	Fabricated	Stainless Steel
A42	1	Dish Machine, Door Type	Ventless	67"	454 lbs	Hobart	AM16VLT-ADV
A42.1	1	Drain Water Tempering Kit		12"	20 lbs	Hobart	DWT2-AM16
A43	1	Clean Dish Table	Fabricated	36"	150 lbs	Fabricated	Stainless Steel
A44	3	Mobile Drying Rack	Four Tier, Mobile	74"	300 lbs	Metro	PR48VX4/ PR39VX4
A45	1	Wall Shelf, Single With Concealed Brackets	Fabricated	58"	165 lbs	Fabricated	Stainless Steel
A46	1	Pot Sink	Fabricated	36"	1575 lbs	Fabricated	Stainless Steel
A46.1	1	Pre-Rinse Faucet		38"	14 lbs	T&S Brass	B-0133-12-CR-B
A47	2	Wall Shelf, Single With Concealed Brackets	Fabricated	58"	100 lbs	Fabricated	Stainless Steel
A48	1	Ice Machine	Existing, By Owner	20"	154 lbs	Owner Furnished	Contractor Installed
A48.1	1	Ice Bin	Existing, By Owner	46"	1500 lbs	Owner Furnished	Contractor Installed
A48.2	1	Water Filtration System		24"	5 lbs	3M Purification	ICE140-S
A49	1	Spare Number					
A50	1	Spare Number					
A51	1	Work Table	Fabricated	36"	200 lbs	Fabricated	Stainless Steel
A52	1	Wall Shelf, Single With Concealed Brackets	Fabricated	58"	196 lbs	Fabricated	Stainless Steel
A53	1	Can Opener		34"	4 lbs	Edlund	S-11
A54	1	Walk-In Cooler		112"	2905 lbs	Thermokool	Custom
A54.1	1	Cooler Evaporator Coil		106"	52 lbs	Coldzone	CL6A073ADA
A54.2	1	Cooler Evaporator Coil		106"	52 lbs	Coldzone	CL6A073ADA
A54.3	1	Remote Compressor Rack	Outdoor, Air Cooled	22"	215 lbs	Coldzone	CFO200E4SEANT
A55	13	Cooler Storage Shelving	Four Tier	74"	800 lbs	Metro	MaxQ
A56	15	Dry Storage Shelving	Four Tier	74"	800 lbs	Metro	MaxQ
A57	1	Spare Number					
A58	1	Spare Number					
A59	2	Dry Storage Shelving	Four Tier, Mobile	74"	300 lbs	Metro	MaxQ
A60	1	Spare Number					
A61	1	Faculty Lounge Counter	By Arch/ID, With Sink	34"	1322 lbs	By Arch/ID	Millwork
A61.1	1	Deck Mount Faucet	By PC	36"	5 lbs	T&S Brass	B-0221-CR
A62	1	Wall Cabinet With Doors	By Arch/ID	30"	900 lbs	By Arch/ID	Millwork
A63	1	Vending Machine	By Owner	72"	600 lbs	By Owner	NIKEC
A64	1	Walk-In Freezer		112"	4280 lbs	Thermokool	Custom
A64.1	1	Freezer Evaporator Coil		106"	52 lbs	Coldzone	CL6E066DDA
A64.2	1	Freezer Evaporator Coil		106"	52 lbs	Coldzone	CL6E066DDA
A64.3	1	Remote Compressor Rack	Outdoor, Air Cooled	35"	352 lbs	Coldzone	CFO500L4SEBNT
A65	12	Freezer Storage Shelving	Four Tier	74"	800 lbs	Metro	MaxQ
A66	5	Freezer Storage Shelving	Four Tier	64"	800 lbs	Metro	MaxQ
A67	2	Air Curtain		84"	220 lbs	Mars Air	NH272-2UA-TS
A68	9	Wall Guard	Fabricated	38"		Fabricated	Stainless Steel
A69	1	Spare Number					
A70	1	Spare Number					
A71	4	Locker, Double	By Owner			By Owner	NIKEC
A72	1	Chemical Storage Shelving	Four Tier, Mobile	74"	300 lbs	Metro	N456EBR
A73	1	Mop Sink		10"	35 lbs	Advance Tabco	9-OP-28
A73.1	1	Service Faucet		36"	8 lbs	T&S Brass	B-0655-01
A74	1	Mop Holder		60"	2 lbs	Advance Tabco	K-242
A75	1	Wall Flashing	Fabricated	48"	82 lbs	Fabricated	Stainless Steel

IDENTIFICATION STAMP
DIV. OF THE STATE ARCHITECT
APP: 03-122528 INC:
REVIEWED FOR
SS ☑ FLS ☑ ACS ☑
DATE: 01/06/2025

PTN: 63529-385 FILE: 15-H3

HIGHLAND HIGH SCHOOL
CAFETERIA REHABILITATION AND MODERNIZATION
2900 ROYAL SCOTS WAY
FOR
KERN HIGH SCHOOL DISTRICT
BAKERSFIELD, KERN COUNTY, CALIFORNIA

1601 NEW STINE ROAD, SUITE 280
BAKERSFIELD, CA 93309
PH: (661) 397-4377
FAX: (661) 397-4378
WWW.SCARCHITECT.COM

STEPHEN J. CORBIN, NCARB, AIA, LEED ®AP

CHECK AND VERIFY ALL DIMENSIONS BEFORE PROCEEDING WITH THE WORK. REPORT DISCREPANCIES TO THE ARCHITECT. ALL CONSTRUCTION SHALL CONFORM TO THE C.B.C.

ricca design STUDIOS
5613 DTC Parkway | Suite 100
Greenwood Village, CO 80111
303.221.0500
www.ricca.com

Foodservice Equipment Schedule

MARK	DATE	REVISIONS
1		
2		
3		

JOB NO. 22075
DRAWN: Ricca
CHECKED: Ricca
DATE: 09/20/2024

QF400-1B

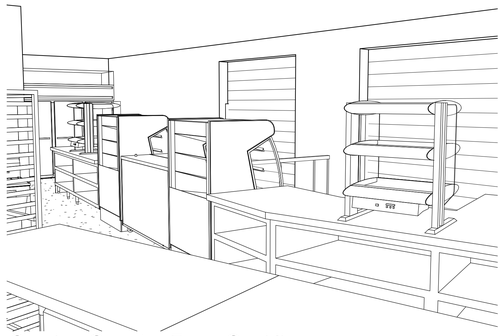

1 Serving Counter From Cookline
SCALE:

2 Cookline From Serving Counter
SCALE:

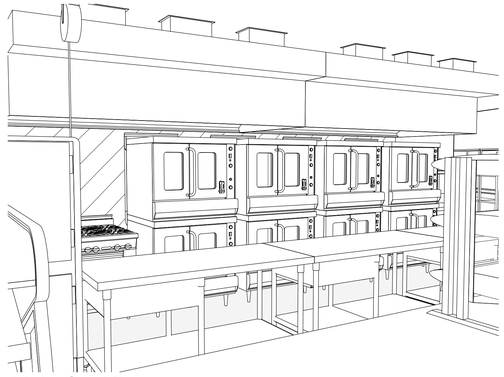

7 Main Cookline
SCALE:

6 Serving Counter Support
SCALE:

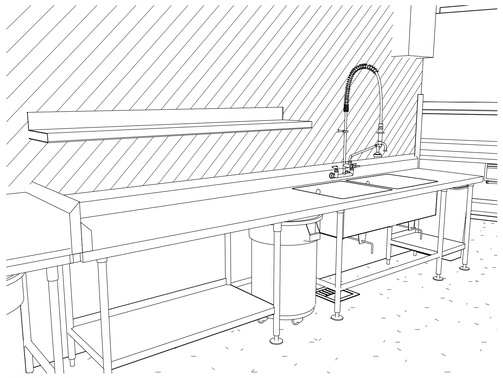

5 BoH Prep
SCALE:

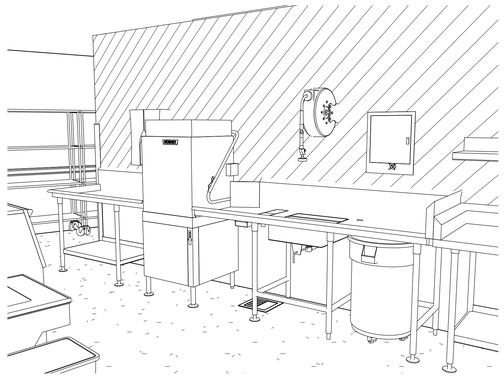

4 Warewashing
SCALE:

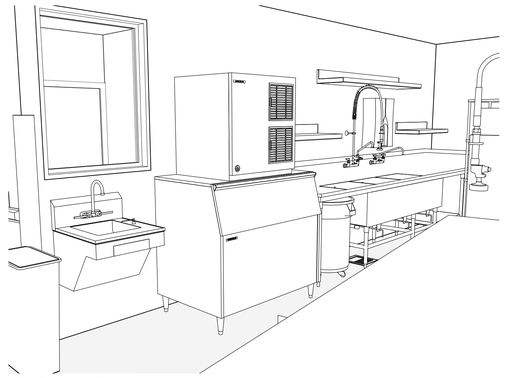

3 Pot Sink & Ice
SCALE:

NOT TO SCALE

IDENTIFICATION STAMP
DIV. OF THE STATE ARCHITECT
APP: 03-122528 INC:
REVIEWED FOR
SS ☑ FLS ☑ ACS ☑
DATE: 01/06/2025

PTN: 63529-385 FILE: 15-H3

HIGHLAND HIGH SCHOOL
CAFETERIA REHABILITATION AND MODERNIZATION
2900 ROYAL SCOTS WAY
FOR
KERN HIGH SCHOOL DISTRICT
BAKERSFIELD, KERN COUNTY, CALIFORNIA

ARCHITECT SCI INC.
1601 NEW STINE ROAD, SUITE 280
BAKERSFIELD, CA 93309
PH: (661) 397-4377
FAX: (661) 397-4378
WWW.SCARCHITECT.COM

LICENSED ARCHITECT STEPHEN J. CORBIN No. C-16788 Exp. 12-31-2025 CALIFORNIA

STEPHEN J. CORBIN, NCARB, AIA, LEED ®-AP

CHECK AND VERIFY ALL DIMENSIONS BEFORE PROCEEDING WITH THE WORK. REPORT DISCREPANCIES TO THE ARCHITECT. ALL CONSTRUCTION SHALL CONFORM TO THE C.B.C.

ricca design STUDIOS
5613 DTC Parkway | Suite 100
Greenwood Village, CO 80111
303.221.0500
www.ricca.com

Foodservice 3D Views

MARK	DATE	REVISIONS
1		
2		
3		

JOB NO. 22075
DRAWN: Ricca
CHECKED: Ricca
DATE: 09/20/2024

QF400-1C
5 OF 21 SHEETS

Foodservice Utility Schedule - (A1-A65)

Item Number	QTY	Description	Remarks	Height	Width	Depth	Weight	Anchorage Detail Reference	Electrical: Emer. Power Req'd	Volts	PH	Amps	KW	HZ	Elec. Conn. Type	Elec. Rough-In AFF	Electrical Remarks	Plumbing: Cold Water Conn. Size	Cold Water Rough-In AFF	Hot Water Conn. Size	Hot Water Flow GPH	Hot Water Rough-In AFF	Direct Drain Conn. Size	Direct Drain Rough-In AFF	Indirect Drain Conn. Size	Gas Conn. Size	Gas MBH	Gas Rough-In AFF	Plumbing Remarks	Ventilation: Exhaust Collar Size Width	Exhaust Collar Size Depth	Exhaust Collar Size DIA	Exhaust Volume	Exhaust Static Pressure	Supply Collar Size Width	Supply Collar Size Depth	Supply Volume	Supply Static Pressure	Ventilation Remarks	Item Number
A1	2	Air Curtain, Unheated		84"	72"	9 3/4"	58 lbs	A-24/QF501-5		115	1	2.6	0.3	60	DIRECT	84"																								A1
A2	1	Mop Sink Cabinet		84"	50 1/2"	22 1/8"	378 lbs	A-9/QF501-5															2"	0"					Direct Drain At Floor											A2
A2.1	1	Service Faucet		36"	12"	12"	8 lbs	POB										1/2"	36"	1/2"	5	36"																	A2.1
A3	1	Refrigerator, Reach-In	Existing, By Owner	83"	78"	34"	691 lbs	A-34/QF501-5		115	1	12	1.38	60	PLUG	24"	Electrical Note E-A.7																							A3
A4	3	Hot Holding Cabinet	Existing, By Owner	73"	27"	34"	686 lbs	A-11/QF501-5		120	1	12	1.44	60	PLUG	24"	Electrical Note E-A.7																							A4
A4.1	1	Retractable Drop Cord	By EC							120	1	16	1.92	60	PLUG		DFA, Electrical Load To Be Determined By Electrical Engineer; Electrical Note E-A.6																							A4.1
A5	1	Stainless Steel Serving Counter	Fabricated	34"	109"	36"	909 lbs	A-4/QF501-5		120	1	6	0.72	60	PLUG		Stub Up,Two (2) GFCI Convenience Receptacle(s) - Rating Assumes 20.0 Amp Circuit																							A5
A6	3	POS System	By Owner	38"	16"	16"	25 lbs	POT		120	1	16	1.92	60	PLUG		Data, Electrical Note E-A.6, Stub Up																							A6
A7	4	Heated Zone Merchandiser		32"	26"	28"	176 lbs	A-18/QF501-5		120	1	12.5	1.5	60	PLUG		Stub Up																							A7
A8	4	Grab-N-Go Case, Refrigerated	Mobile	60"	36"	35"	590 lbs	A-34/QF501-5		208	1	10	2.08	60	DIRECT		Stub Up																					5400 BTUH Heat Removal	A8
A9	1	Spare Number																																						A9
A10	1	Spare Number																																						A10
A11	2	Milk Refrigerator	Existing, By Owner, Mobile	39.5"	58"	31"	458 lbs	A-34/QF501-5		115	1	7.5	0.86	60	PLUG		Electrical Note E-A.7																							A11
A12	1	Stainless Steel Serving Counter	Fabricated	34"	229"	36"	2587.5 lbs	A-4/QF501-5		120	1	6	0.72	60	PLUG		Stub Up,Two (2) GFCI Convenience Receptacle(s) - Rating Assumes 20.0 Amp Circuit																							A12
A13	1	Stainless Steel Serving Counter	Fabricated	34"	132"	36"	2242.5 lbs	A-4/QF501-5		120	1	6	0.72	60	PLUG		Stub Up,Two (2) GFCI Convenience Receptacle(s) - Rating Assumes 20.0 Amp Circuit																							A13
A14	4	Hand Sink	With Soap And Towel Dispenser	34"	22"	24"	55 lbs	A-24/QF501-5										1/2"	18"	1/2"	90	18"	1 1/2"	15"															A14
A15	4	Trash Receptacle, 23 Gallon	By Owner, Mobile	27"	11"	20"		A-34/QF501-5																																A15
A16	1	Air Curtain		84"	36"	16"	60 lbs	A-24/QF501-5		115	1	9	1.04	60	DIRECT	84"																							A16
A17	1	Refrigerator, Roll-In	Existing, By Owner	89"	34"	68"	685 lbs	A-9/QF501-5		115	1	10.3	1.18	60	PLUG	85"	Electrical Note E-A.7																							A17
A18	5	Pan Rack Cart	Existing, By Owner, Mobile	69 1/4"	21"	26"		A-34/QF501-5																																A18
A19	1	Spare Number																																						A19
A20	19	Corner Guard		60"			10 lbs	POB																																A20
A21	1	Refrigerator, Reach-In	Existing, By Owner, Mobile	83"	52"	34"	745 lbs	A-34/QF501-5		115	1	6.9	0.79	60	PLUG	84"	Electrical Note E-A.7																							A21
A22	1	Freezer, Roll-In	Existing, By Owner	89"	68"	34"	685 lbs	A-9/QF501-5		208	1	13.5	2.81	60	DIRECT	84"	Electrical Note E-A.7																							A22
A23	3	Work Table, Mobile	Mobile, Fabricated, With Drawers	36"	66"	30"	200 lbs	A-34/QF501-5																																A23
A24	1	Work Table	Fabricated	36"	42"	30"	200 lbs	A-1/QF501-5		120	1	16	1.92	60	PLUG	48"	Two (2) GFCI Convenience Receptacle(s) - Rating Assumes 20.0 Amp Circuit																							A24
A25	1	Wall Shelf, Single With Concealed Brackets	Fabricated	58"	42"	14"	90 lbs	A-17/QF501-5																																A25
A26	4	Corner Guard	Fabricated, U Shape	60"			10 lbs	POB																																A26
A27	1	Exhaust Hood With MUA	By Mechanical					S-3.01																																A27
A27.1	1	Fire Suppression System, Wall Mounted	By Mechanical					POB																																A27.1
A27.2	1	Hood Control Panel	By Mechanical					POB																																A27.2
A28	4	Convection Oven, Double		78"	38"	37"	1397 lbs	A-11/QF501-5		120	1	14.8	1.78	60	PLUG	24"	Two (2) Electric Connections Required Each At 120V/1Ph/60Hz 7.4 Amps									3/4"	230	18"	Requires Two (2) Gas Connections Each At 115,000 BTU/H											A28
A29	1	Spare Number																																						A29
A30	1	Spare Number																																						A30
A31	1	Wall Flashing	Fabricated	74"	237"		184 lbs	POB																																A31
A32	1	Range, 6-Burner With Standard Oven		40"	36"	36"	536 lbs	A-7/QF501-5		120	1	3.4	0.41	60	PLUG	24"										1 1/4"	220	18"	Rear Gas Connection											A32
A33	1	Work Table	Fabricated	36"	94"	30"	200 lbs	A-1/QF501-5		120	1	16	1.92	60	PLUG	48"	Two (2) GFCI Convenience Receptacle(s) - Rating Assumes 20.0 Amp Circuit																							A33
A34	1	Wall Shelf, Single With Concealed Brackets	Fabricated	58"	94"	14"	196 lbs	A-17/QF501-5																																A34
A35	1	Work Table With Sinks	Fabricated	36"	152"	30"	375 lbs	A-2/QF501-5		120	1	16	1.92	60	PLUG	48"	Two (2) GFCI Convenience Receptacle(s) - Rating Assumes 20.0 Amp Circuit	1/2"	18"	1/2"	50	18"			1 1/2"				IW To Floor Sink											A35
A36	1	Wall Shelf, Single With Concealed Brackets	Fabricated	58"	78"	14"	170 lbs	A-17/QF501-5																																A36
A37	1	Wall Flashing	Fabricated	74"	324"		224 lbs	POB																																A37
A38	3	Trash Receptacle With Dolly	Mobile	27"	21"	25"	10 lbs	A-34/QF501-5																																A38
A39	1	Hose Reel		60"	7"	21"	46 lbs	A-16/QF501-5										3/8"	60"										PC to interconnect from control cabinet to hose reel in walls providing tempered water to hose reel											A39
A39.1	1	Hose Reel Control Cabinet						POB										1/2"	60"	1/2"	25	60"							PC To Inter-Connect Control Cabinet To Equipment In Wall											A39.1
A40	2	Chemical Dispensing System	By Purveyor															1/2"											Plumbing Note P-A.6											A40
A41	1	Soiled Dish Table	Fabricated	36"	84"	30"	250 lbs	A-2/QF501-5																	1 1/2"				IW To Floor Sink											A41
A42	1	Dish Machine, Door Type	Ventless	67"	29"	27"	454 lbs	A-11/QF501-5		208	3	53.7	19.32	60	DIRECT	24"	60 Amp Minimum Circuit, Single Point Electrical Service	3/4"	18"	3/4"	25	18"			1 1/2"				IW To Floor Sink									5300 BTUH Heat Removal	A42
A42.1	1	Drain Water Tempering Kit		12"			20 lbs	POF										3/4"	18"																					A42.1
A43	1	Clean Dish Table	Fabricated	36"	60"	30"	150 lbs	A-2/QF501-5																																A43
A44	3	Mobile Drying Rack	Four Tier, Mobile	74"		21"	300 lbs	A-34/QF501-5																																A44
A45	1	Wall Shelf, Single With Concealed Brackets	Fabricated	58"	72"	14"	165 lbs	A-17/QF501-5																																A45
A46	1	Pot Sink	Fabricated	36"	144"	30"	1575 lbs	A-2/QF501-5										3/4"	18"	3/4"	90	18"			1 1/2"				IW To Floor Sink											A46
A46.1	1	Pre-Rinse Faucet		38"	10"	19"	14 lbs	POF																																A46.1
A47	2	Wall Shelf, Single With Concealed Brackets	Fabricated	58"	36"	14"	100 lbs	A-17/QF501-5																																A47
A48	1	Ice Machine	Existing, By Owner	20"	30"	27"	154 lbs	A-11/QF501-5		208	1	12.5	2.6	60	DIRECT	66"	Electrical Note E-A.7	3/8"							3/4"				IW To Floor Sink; PC To Inter-Connect Water Filter To Equipment, Plumbing Note P-A.7									15,700 BTUH Heat Removal, Mechanical Note M-A.7	A48
A48.1	1	Ice Bin	Existing, By Owner	46"	48"	32"	1500 lbs	A-11/QF501-5																	3/4"				IW To Floor Sink, Plumbing Note P-A.7											A48.1
A48.2	1	Water Filtration System		24"	4"	4"	5 lbs	POB										3/8"	24"										PC to interconnect water filter to equipment in walls.											A48.2
A49	1	Spare Number																																						A49
A50	1	Spare Number																																						A50
A51	1	Work Table	Fabricated	36"	94"	30"	200 lbs	A-1/QF501-5		120	1	16	1.92	60	PLUG	48"	Two (2) GFCI Convenience Receptacle(s) - Rating Assumes 20.0 Amp Circuit																							A51
A52	1	Wall Shelf, Single With Concealed Brackets	Fabricated	58"	94"	30"	196 lbs	A-17/QF501-5																																A52
A53	1	Can Opener		34"	3"	8"	4 lbs	POF																																A53
A54	1	Walk-In Cooler		112"	198"	181"	2905 lbs	POB		120	1	12	1.44	60	DIRECT		DFA, Refer To QF701 Series For Further Information On Walk-In																							A54
A54.1	1	Cooler Evaporator Coil		106"	43 1/2"	15 1/2"	52 lbs	E/QF700-1		120	1	3.2	0.38	60	DIRECT		DFA, Refer To QF700 Series For Further Information On Refrigeration System								1"				Refer To QF700 Series For Further Information On Refrigeration System, IW To Floor Sink											A54.1
A54.2	1	Cooler Evaporator Coil		106"	43 1/2"	15 1/2"	52 lbs	E/QF700-1		120	1	3.2	0.38	60	DIRECT		DFA, Refer To QF700 Series For Further Information On Refrigeration System								1"				Refer To QF700 Series For Further Information On Refrigeration System, IW To Floor Sink											A54.2
A54.3	1	Remote Compressor Rack	Outdoor, Air Cooled	22"	28"	39"	215 lbs	A/QF700-1		208	3	10.6	3.81	60	DIRECT		Stub Up, Refer To QF700 Series For Further Information On Refrigeration System																							A54.3
A55	13	Cooler Storage Shelving	Four Tier	74"		21"	800 lbs	A-11/QF501-5																																A55
A56	15	Dry Storage Shelving	Four Tier	74"		21"	800 lbs	A-11/QF501-5																																A56
A57	1	Spare Number																																						A57
A58	1	Spare Number																																						A58
A59	2	Dry Storage Shelving	Four Tier, Mobile	74"	42"	21"	300 lbs	A-34/QF501-5																																A59
A60	1	Spare Number																																						A60
A61	1	Faculty Lounge Counter	By Arch/ID, With Sink	34"	187"	24"	1322 lbs	A-4/QF501-5		120	1	6	0.72	60	DIRECT	48"	Three (3) GFCI Convenience Receptacle(s) - Rating Assumes 20.0 Amp Circuit, Electrical Note E-A.6						1"	12"					Plumbing Note P-A.7											A61
A61.1	1	Deck Mount Faucet	By PC	36"	11"	12"	5 lbs	POF										1/2"	18"	1/2"	10	18"							Plumbing Note P-A.7											A61.1
A62	1	Wall Cabinet With Doors	By Arch/ID	30"	187"	14"	900 lbs	A-24/QF501-5																																A62
A63	1	Vending Machine	By Owner	72"	36"	28"	600 lbs	A-11/QF501-5		120	1	16	1.92	60	PLUG	24"	Electrical Note E-A.6																							A63
A64	1	Walk-In Freezer		112"	192"	187"	4280 lbs	POB		120	1	12	1.44	60	DIRECT		DFA, Refer To QF701 Series For Further Information On Walk-In																							A64
A64.1	1	Freezer Evaporator Coil		106"	43 1/2"	15 1/2"	52 lbs	E/QF700-1		208	1	2	0.42	60	DIRECT		DFA, Refer To QF700 Series For Further Information On Refrigeration System								1"				Refer To QF700 Series For Further Information On Refrigeration System, IW To Floor Sink											A64.1
A64.2	1	Freezer Evaporator Coil		106"	43 1/2"	15 1/2"	52 lbs	E/QF700-1		208	1	2	0.42	60	DIRECT		DFA, Refer To QF700 Series For Further Information On Refrigeration System								1"				Refer To QF700 Series For Further Information On Refrigeration System, IW To Floor Sink											A64.2
A64.3	1	Remote Compressor Rack	Outdoor, Air Cooled	35"	44"	33"	352 lbs	A/QF700-1		208	3	20.1	7.23	60	DIRECT		Stub Up, Refer To QF700 Series For Further Information On Refrigeration System																							A64.3
A65	12	Freezer Storage Shelving	Four Tier	74"		21"	800 lbs	A-11/QF501-5																																A65

IDENTIFICATION STAMP
DIV. OF THE STATE ARCHITECT
APP: 03-122528 INC:
REVIEWED FOR
SS ☑ FLS ☑ ACS ☑
DATE: 01/06/2025

PTN: 63529-385 FILE: 15-H3

HIGHLAND HIGH SCHOOL
CAFETERIA REHABILITATION AND MODERNIZATION
2900 ROYAL SCOTS WAY
FOR
KERN HIGH SCHOOL DISTRICT
BAKERSFIELD, KERN COUNTY, CALIFORNIA

ARCHITECT SCI INC.
1601 NEW STINE ROAD, SUITE 280
BAKERSFIELD, CA 93309
PH: (661) 397-4377
FAX: (661) 397-4378
WWW.SCARCHITECT.COM
LICENSED ARCHITECT STEPHEN J. CORBIN No. C-16786 Exp. 12/31/24 STATE OF CALIFORNIA
STEPHEN J. CORBIN, NCARB, AIA, LEED ®-AP

CHECK AND VERIFY ALL DIMENSIONS BEFORE PROCEEDING WITH THE WORK. REPORT DISCREPANCIES TO THE ARCHITECT. ALL CONSTRUCTION SHALL CONFORM TO THE C.B.C.

ricca design STUDIOS
5613 DTC Parkway | Suite 100
Greenwood Village, CO 80111
303.221.0500
www.ricca.com

Foodservice Utility Schedule

MARK	DATE	REVISIONS
1		
2		
3		

JOB NO. 22075
DRAWN: Ricca
CHECKED: Ricca
DATE: 09/20/2024

QF400-2A

Foodservice Utility Schedule - (A66-A75)

									Electrical									Plumbing												Ventilation										
																														Exhaust Collar Size					Supply Collar Size						
Item Number	QTY	Description	Remarks	Height	Width	Depth	Weight	Anchorage Detail Reference	Emer. Power Req'd	Volts	PH	Amps	KW	HZ	Elec. Conn. Type	Elec. Rough-In AFF	Electrical Remarks	Cold Water Conn. Size	Cold Water Rough-In AFF	Hot Water Conn. Size	Hot Water Flow GPH	Hot Water Rough-In AFF	Direct Drain Conn. Size	Direct Drain Rough-In AFF	Indirect Drain Conn. Size	Gas Conn. Size	Gas MBH	Gas Rough-In AFF	Plumbing Remarks	Width	Depth	DIA	Exhaust Volume	Exhaust Static Pressure	Width	Depth	Supply Volume	Supply Static Pressure	Ventilation Remarks	Item Number
A66	5	Freezer Storage Shelving	Four Tier	64"		21"	800 lbs	A-11/QF501-5																																A66
A67	2	Air Curtain		84"	72"	16"	220 lbs	A-24/QF501-5		115	1	9	1.04	60	DIRECT	84"																								A67
A68	9	Wall Guard	Fabricated	38"		1"		POB																																A68
A69	1	Spare Number																																						A69
A70	1	Spare Number																																						A70
A71	4	Locker, Double	By Owner																																					A71
A72	1	Chemical Storage Shelving	Four Tier, Mobile	74"	48"	21"	300 lbs	A-34/QF501-5																																A72
A73	1	Mop Sink		10"	33"	25"	35 lbs	POB															2"	0"					Direct Drain At Floor											A73
A73.1	1	Service Faucet		36"	12"	12"	8 lbs	POB										1/2"	18"	1/2"	5	18"																	A73.1
A74	1	Mop Holder		60"	23"	1 1/2"	2 lbs	POB																																A74
A75	1	Wall Flashing	Fabricated	48"	57"		82 lbs	POB																																A75

IDENTIFICATION STAMP
DIV. OF THE STATE ARCHITECT
APP: 03-122528 INC:
REVIEWED FOR
SS ☑ FLS ☑ ACS ☑
DATE: 01/06/2025

PTN: 63529-385 FILE: 15-H3

HIGHLAND HIGH SCHOOL
CAFETERIA REHABILITATION AND MODERNIZATION
2900 ROYAL SCOTS WAY
FOR
KERN HIGH SCHOOL DISTRICT
BAKERSFIELD, KERN COUNTY, CALIFORNIA

ARCHITECT INC.
1601 NEW STINE ROAD, SUITE 280
BAKERSFIELD, CA 93309
PH: (661) 397-4377
FAX: (661) 397-4378
WWW.SCARCHITECT.COM

LICENSED ARCHITECT STEPHEN J. CORBIN No. C-16784 Expiration: 11/30/25 STATE OF CALIFORNIA

STEPHEN J. CORBIN, NCARB, AIA, LEED ®-AP

CHECK AND VERIFY ALL DIMENSIONS BEFORE PROCEEDING WITH THE WORK. REPORT DISCREPANCIES TO THE ARCHITECT. ALL CONSTRUCTION SHALL CONFORM TO THE C.B.C.

ricca design STUDIOS
5613 DTC Parkway | Suite 100
Greenwood Village, CO 80111
303.221.0500
www.ricca.com

Foodservice Utility Schedule

MARK	DATE	REVISIONS
1		
2		
3		

JOB NO. 22075
DRAWN: Ricca
CHECKED: Ricca
DATE: 09/20/2024

QF400-2B

Level 1 BC&V Plan
SCALE: 1/4" = 1'-0"

TRUE NORTH
PLAN NORTH

BUILDING CONDITIONS & VENTILATION NOTES

THE NOTES BELOW MAY APPLY TO ONE OR ALL DESIGN, CONSTRUCTION, OR CLOSE-OUT PHASES OF THIS PROJECT

M-A. GENERAL NOTES

1. THE ASSIGNED KITCHEN EQUIPMENT CONTRACTOR SHALL PERFORM A THOROUGH PROJECT REVIEW OF ALL CURRENT CONTRACT DOCUMENTS THAT APPLY TO FOODSERVICE ZONES AND EQUIPMENT. KITCHEN EQUIPMENT CONTRACTOR SHALL GENERATE ENGINEERING INDEPENDENT OF THIS SHEET CONFORMING TO FIELD CONDITIONS WHERE REQUIRED AND MANUFACTURER'S REQUIREMENTS FOR EQUIPMENT SPECIFIED AND THUS INTENDED TO BE PURCHASED AND SET-IN-PLACE.
2. ALL CONSTRUCTION AND MECHANICAL WORK SHOWN ON THIS PLAN MUST COMPLY WITH ALL APPLICABLE CODES AND REGULATIONS, INCLUDING CURRENT INTERNATIONAL MECHANICAL CODE, AS THEY APPLY TO FOODSERVICE EQUIPMENT AND ZONES.
3. ALL WORK SERVICES, INTERCONNECTIONS, FIELD CONNECTIONS, AND FINAL CONNECTIONS INDICATED ON THIS PLAN SHALL BE COMPLETED BY CONTRACTORS OTHER THAN THE KITCHEN EQUIPMENT CONTRACTOR UNLESS SPECIFICALLY ASSIGNED TO THE KITCHEN EQUIPMENT CONTRACTOR.
4. THIS PLAN IS INTENDED TO SHOW SPECIAL BUILDING AND VENTILATION REQUIREMENTS FOR FOODSERVICE EQUIPMENT ONLY. REFER TO ARCHITECTURAL AND ENGINEERING PLANS FOR SCOPE OUTSIDE OF FOODSERVICE EQUIPMENT.
5. THIS DRAWING IS ISSUED FOR DESIGN INTENT PURPOSES ONLY. REFER TO THE KITCHEN EQUIPMENT CONTRACTOR'S DIMENSIONED ROUGH-IN DRAWINGS AND APPROVED SHOP DRAWINGS FOR SUPPLEMENTAL COORDINATION AND INSTALLATION REQUIREMENTS FOR FOODSERVICE EQUIPMENT ON THIS PLAN.
6. ALL EQUIPMENT PROVIDED BY OTHERS -INCLUDING BY OWNER/OPERATOR/PURVEYOR- SHOWN ON THIS PLAN ARE MINIMUM GUIDELINES ONLY. KITCHEN EQUIPMENT CONTRACTOR TO VERIFY INFORMATION, TECHNICAL DATA, AND SPECIFICATIONS FOR THIS EQUIPMENT. GENERAL CONTRACTOR TO VERIFY AND MAKE FINAL ROUGH-IN CONNECTIONS AS REQUIRED.
7. EXISTING, TO-REMAIN-IN-PLACE, OR TO-BE-RELOCATED EQUIPMENT SHOWN ON THIS PLAN ARE MINIMUM GUIDELINES ONLY AND MUST BE VERIFIED. CONTACT OWNER/OPERATOR FOR INFORMATION, TECHNICAL DATA, AND SPECIFICATIONS FOR THIS EQUIPMENT. GENERAL CONTRACTOR AND KITCHEN EQUIPMENT CONTRACTOR TO VERIFY, DISCONNECT, AND MAKE FINAL ROUGH-IN CONNECTIONS AS REQUIRED.
8. RECOMMEND TO PROVIDE MINIMUM LIVE LOADS OF 150 LBS. PER SQUARE FOOT (68KG PER.09 SQUARE METERS). PROVIDE REINFORCED SLAB FOR ANY FOODSERVICE EQUIPMENT THAT MAY EXCEED 150 LBS. PER SQUARE FOOT, SUCH AS A LARGE COMPRESSOR RACK, LARGE DISH MACHINE, LARGE OVENS, ETC.
9. RECOMMENDED MINIMUM FINISHED CEILING HEIGHTS IN KITCHEN AREAS AND FOR SPECIFIC FOODSERVICE EQUIPMENT ARE AS FOLLOWS:
   A. KITCHEN AREAS WITH EXHAUST HOODS 9'-0" (2.75M)
   B. WALK-IN COOLER/FREEZER AREAS 9'-0" (2.75M)
   C. GENERAL AREAS 9'-0" (2.75M)
   D. ICE MACHINE AREAS 10'-6" (3.2M)
10. ADEQUATE SPACE IS NEEDED ABOVE THE FINISHED CEILINGS FOR MECHANICAL AND ELECTRICAL WORK, ESPECIALLY ABOVE EXHAUST HOODS AND WALK-IN COOLER/FREEZERS. NOTIFY RICCA DESIGN STUDIOS IF HEIGHTS ARE LESS THAN RECOMMENDED MINIMUMS.
    A. WALK-IN COOLER/FREEZER CEILING PANELS REQUIRE ADDITIONAL 18" (457MM) CLEARANCE ABOVE FOR INSTALLATION
    B. ICE MACHINES REQUIRE 24" (609 MM) CLEARANCE ABOVE FOR INSTALLATION
11. ALL FLOOR SINKS AND FLOOR TROUGHS TO BE SET FLUSH WITH FINISHED FLOOR - UNLESS OTHERWISE DIRECTED BY LOCAL CODE. ALL FLOOR TROUGHS SERVING FOODSERVICE EQUIPMENT WITH LIQUID VOLUME IN TILTING OR IN VALVED DUMPING MANNER SHALL BE PLACED IN A LOCATION DIRECTLY RELATED TO MANUFACTURER'S REQUIRED POUR-PATH FOR EQUIPMENT TO BE SET IN PLACE. KITCHEN EQUIPMENT CONTRACTOR AND GENERAL CONTRACTOR TO FIELD-VERIFY LOCATION IN RELATION TO REQUIRED POUR PATH, AND IN HEIGHT PER PITCH-TO-DRAIN REQUIRED.
12. THE MOUNTED HEIGHT FOR THE BOTTOM EDGE OF EXHAUST HOODS TO BE SET AT 6'-8" MINIMUM (2032MM) ABOVE THE FINISHED FLOOR UNLESS OTHERWISE INDICATED. THE BOTTOM EDGE OF EXHAUST HOODS SHALL BE NO HIGHER THAN 7'-0" (2134MM) ABOVE FINISHED FLOOR.
13. MANUAL-PULL EXHAUST HOOD FIRE EVENT PULL STATION AND CONDUIT TO BE MOUNTED WITHIN WALL CAVITY AND SET TO 48" ABOVE FINISHED FLOOR (1220MM) AT CENTER. CONDUIT TO TERMINATE PER MANUFACTURER'S DRAWINGS. KITCHEN EQUIPMENT CONTRACTOR AND MECHANICAL CONTRACTOR TO VERIFY LOCATION WITH APPLICABLE FIRE CODE OFFICIALS PRIOR TO INSTALLATION.
14. GENERAL CONTRACTOR TO CONFIRM FOLLOWING IS COMPLETED PRIOR TO THE FOODSERVICE EQUIPMENT DELIVERY AND SET-IN-PLACE:
    A. THE WALLS AND CEILINGS ARE INSTALLED AND FINISHED. WALLS AND CEILINGS MUST BE SMOOTH, EASILY CLEANABLE, NON-ABSORBENT, DURABLE, WITH FINISHES APPROVED BY LOCAL HEALTH CODE OFFICIALS.
    B. THE FLOORING IS INSTALLED AND WASHED CLEAN. FLOORS MUST BE NON-SLIP, EASILY CLEANABLE, NON-POROUS, NON-ABSORBENT, AND DURABLE WITH FINISHES APPROVED BY LOCAL HEALTH CODE OFFICIALS. ALL VERTICAL INTERSECTIONS OF FLOORS-TO-WALLS SHALL HAVE COVED BASES INSTALLED.
    C. CONFIRM IF A LOADING DOCK IS AVAILABLE.
    D. COORDINATION WITH APPLICABLE TRADESPEOPLE FOR ANY DOOR/WINDOW OPENINGS AND/OR PASSAGEWAYS REQUIRED FOR THE DELIVERY OF FOODSERVICE EQUIPMENT.

M-B. MECHANICAL NOTES

MECHANICAL ENGINEER IS RESPONSIBLE FOR SPECIFYING THE FOLLOWING APPLICABLE EQUIPMENT AND PROVIDING THE FOLLOWING CONDITIONS. MECHANICAL CONTRACTOR IS RESPONSIBLE FOR PROVIDING, INSTALLING, AND MAKING FINAL CONNECTIONS TO FOODSERVICE EQUIPMENT PER BELOW INSTRUCTIONS.

1. ALL COOKING EXHAUST HOOD ASSEMBLIES, DUCTING, COMPONENTS, ETC. SHALL BE TYPE I; ALL WARE WASHING ASSEMBLIES, DUCTING, COMPONENTS, ETC. SHALL BE TYPE II AS REQUIRED PER N.F.P.A.-96.
2. EXHAUST HOOD DUCT TRANSITIONS TO HOODS, FANS, MAKE-UP AIR UNITS, POLLUTION CONTROL UNITS, FIRE-RATED MATERIALS, COMPONENTS, ETC. MAKE ALL FINAL CONNECTIONS ON ALL HOODS.
3. BALANCED TEMPERED SUPPLY AIR AND EXHAUST AIR IN KITCHEN AREAS TO CONTAIN COOKING ODORS AND EFFLUENT AND PROVIDE A COMFORTABLE WORKING ENVIRONMENT. THESE ZONES SHALL BE DESIGNED FOR SLIGHTLY NEGATIVE PRESSURE PER CODE.
4. INDEPENDENT OF EXHAUST HOOD MAKE-UP AIR PLENUM DIFFUSERS AT A LOCATION MINIMUM 8'-0" (2.4M) (CASTING NO GREATER THAN 150 FPM VELOCITY) TO 15'-0" (4.6M) (CASTING NO GREATER THAN 300 FPM VELOCITY) AWAY FROM THE EXHAUST HOOD IN PLAN. 4-WAY CEILING DIFFUSERS SHALL NOT BE UTILIZED IN ANY COOKING ZONE WITHIN KITCHENS.
5. ALL EXHAUST DUCTWORK SEAMS AND JOINTS MUST BE FULLY-WELDED AND WATER/GREASE-TIGHT. ALL EXHAUST DUCTS MUST BE PITCHED PER CODES. ALUMINUM EXHAUST DUCTWORK SHALL NOT BE USED AS DUCTING MATERIAL.
6. ALL FIRE-RATED MATERIALS FOR EXHAUST HOODS, VENT DUCTS, VENT STACKS, AND HEAT-PRODUCING FOODSERVICE EQUIPMENT.
7. SWITCHES, CONTROLS FOR SUPPLY FANS AND EXHAUST FANS, DEMAND CONTROL VENTILATION SYSTEMS, AND HVAC COMPONENTS.
8. AUTOMATIC ACTIVATION OF THE EXHAUST HOOD(S) WHENEVER COOKING OCCURS PER CURRENT INTERNATIONAL MECHANICAL CODE IS THE RESPONSIBILITY OF THE MECHANICAL ENGINEER OF RECORD. VERIFY SPECIFIC REQUIREMENTS WITH LOCAL CODE AUTHORITIES.
9. ENSURE THAT ENTIRE KITCHEN EXHAUST SYSTEM FROM EXHAUST HOOD CANOPY TO FAN IS ASHRAE 90.1 SECTION 5,6,7-COMPLIANT PRIOR TO COMMENCEMENT OF CONSTRUCTION WHEN AND WHERE APPLICABLE. WHERE DEMAND CONTROL VENTILATION IS PLANNED, MECHANICAL ENGINEER TO VERIFY THAT VOLUME DAMPERS AND PEAK-DEMAND LIMITERS IN SIZE AND IN LOCATION ARE PLANNED AND CONTROLLED TO PROVIDE A FULLY-FUNCTIONAL SYSTEM AT TIME OF COMMISSIONING AND TURN-OVER.
10. ADDITIONAL AIR CHANGES/HEAT REMOVAL FOR AIR-COOLED AND FOR WATER-COOLED CONDENSING UNITS AND ICE MACHINES SHALL BE SUPPLIED PER MANUFACTURER'S RECOMMENDATIONS.
11. AT LEAST 1.5 TIMES ADDITIONAL VS STANDARD ROOM AIR CHANGES SHALL BE PLANNED WITHIN WARE WASHING ROOMS/ZONES.
12. WHERE DIRECT EXHAUST VENTING IS PERMITTED, PROVIDE A DOUBLE-WALLED GAS CHIMNEY TO THE ATMOSPHERE AS ALLOWED/REQUIRED BY LOCAL CODE. ANY FLUE OF EXCESSIVE LENGTH WITH BENDS OR OTHER RESTRICTIONS SHALL BE PROVIDED WITH A BOOSTER EXHAUST FAN INTERWIRED TO OPERATE WITH THE EQUIPMENT SERVED. BOOSTER FAN SHALL PROVIDE 0" S.P. AT CONNECTION TO EQUIPMENT.

M-C. GENERAL CONTRACTOR NOTES

THE ARCHITECT IS RESPONSIBLE FOR SPECIFYING THE FOLLOWING. THE GENERAL CONTRACTOR IS RESPONSIBLE FOR PROVIDING AND INSTALLING THE FOLLOWING.

1. THE IN-WALL REINFORCING OR WALL BACKING FOR ALL WALL-MOUNTED AND RECESSED FOODSERVICE EQUIPMENT AND CONTROL PANELS.
2. TROUGH DIMENSIONS AND LOCATIONS ON THIS PLAN ARE FOR USE IN SLAB BLOCK-OUT PLANNING IF REQUIRED BY CONSTRUCTION SCHEDULE. FINAL SIZE AND LOCATION TO BE PROVIDED BY KEC WITHIN ISSUED SUBMITTALS.
3. REFER TO MANUFACTURER'S DRAWINGS IN QF701 WALK-IN BOX DETAILS SHEET SERIES FOR NECESSARY FLOOR CONDITIONS - INCLUDING DEPTHS, FLOOR CONSTRUCTION, AND FINISHES. ALL SUB-SLAB, SLAB, OR DEPRESSIONS SHALL BE PROVIDED WITH A SMOOTH AND TRANSIT-LEVEL FINISH. ONCE EQUIPMENT IS SET IN PLACE, REMAINING DEPRESSION TO BE INFILLED WITH GROUT.
4. MANDATORY FOR ALL WALK-IN FREEZER COMPARTMENTS OVER 600 SQUARE FOOT AREA(56SM): PROVIDE FREEZE PREVENTION BELOW THE INSULATED FLOOR SLAB ON GRADE. SUGGESTIONS ARE DRAINAGE/VENTING SYSTEM, HEAT TRACE SYSTEM, AND/OR REFRIGERATION HEAT GAIN GLYCOL SYSTEM.
5. ALL OPENINGS IN WALLS AS INDICATED ON THIS PLAN.
6. ALL PADS OR CURBS FOR FOODSERVICE EQUIPMENT AND/OR ROOF-MOUNTED COMPRESSOR RACKS PER MANUFACTURER'S INSTRUCTIONS AND/OR DETAILS SHOWN IN THIS DOCUMENT SET.
7. ALL HOLES OR SLEEVES THROUGH ROOFS, FLOORS, WALLS, AND CEILINGS AS REQUIRED FOR THE INSTALLATION OF REFRIGERATION, DRINK, ELECTRICAL, OR PLUMBING LINES. THE GENERAL CONTRACTOR SHALL BE RESPONSIBLE FOR SEALING HOLES AND SLEEVES AFTER INSTALLATION OF THE LINES TO ENSURE A VERMIN-PROOF INSTALLATION. SEE DETAIL 28/A10.3 FOR ROOF PENETRATIONS AND DETAIL 8/10.2 FOR WALL/CEILING PENETRATIONS
8. WALL(S) AND CEILING, BEHIND, BELOW, AND AROUND TYPE 1 EXHAUST HOOD(S) SHALL CONFORM TO CURRENT N.F.P.A.- 96 AND ANY OTHER APPLICABLE CODE DEFINITION IN REGARD TO REQUIRED CLEARANCES TO COMBUSTIBLE, LIMITED, OR NON-COMBUSTIBLE MATERIALS. ARCHITECT, MECHANICAL ENGINEER, AND KEC TO VERIFY THAT PLANNED CLEARANCES CONFORM TO CODE PRIOR TO INSTALLATION OF EXHAUST CANOPY.
9. PROVIDE A TRANSIT-LEVEL FINISH BELOW THIS EQUIPMENT TO THE OUTER EDGE AS INDICATED IN PLAN.
10. ALL CONDUITS AND ROUTING OF CONDUITS FOR REMOTE REFRIGERATION LINES AS REQUIRED. ARCHITECT TO ASSIGN SCOPE AND SHOW ROUTING OF CONDUITS THROUGH BUILDING. CONDUITS SHALL HAVE A SMOOTH INTERIOR FINISH VERIFY SIZES WITH KITCHEN EQUIPMENT CONTRACTOR.
11. ALL CONDUITS/CHASES AND ROUTING OF CONDUITS/CHASES FOR BEVERAGE LINES AS REQUIRED. ARCHITECT TO ASSIGN SCOPE AND SHOW ROUTING OF CHASES THROUGH BUILDING. CONDUITS/CHASES SHALL HAVE A SMOOTH INTERIOR FINISH AND MUST BE SEALED WATER-TIGHT. A MINIMUM RADIUS OF 30" (762 MM) AT ALL BENDS WITH SWEEPS WIDENING AS DIAMETER WIDENS (45-DEGREE JOINTS ARE NOT ALLOWED). AN ACCESSIBLE PULL BOX/PULL SLEEVE MAY BE REQUIRED IF OVER 75'-0" (23M) (VERIFY WITH OWNER/OPERATOR'S PURVEYOR) OR WHERE LOCATED IN FLOORS OR CONCEALED SPACES. THE TOTAL OF ALL BENDS BETWEEN PULL BOXES NOT TO EXCEED 180 DEGREES. STUB CONDUIT ENDS OUT 4" (100MM) FROM WALLS, CEILING, OR FINISHED FLOORS. RECOMMENDED CONDUIT SIZE IS 8" (200MM) DIAMETER FOR BEER, 6" (152MM) DIAMETER MINIMUM FOR OTHER BEVERAGES. SCHEDULE 40 PVC IS STANDARD FOR UNDER-SLAB APPLICATIONS, BUT METAL MAY BE REQUIRED ABOVE GRADE AND WITHIN CEILING PLENUMS. GENERAL CONTRACTOR TO VERIFY MATERIAL TYPE WITH LOCAL CODES AND REGULATIONS. CONDUIT CHASEWAYS SHALL BE SEALED WITH EXPANDING FOAM INSULATION AFTER INSTALLATION IS COMPLETE AND COVER TO A SMOOTH AND CLEANABLE CONDITION. WHERE BEVERAGE CONDUITS ARE REQUIRED TO RUN EXTERIOR OR OUTSIDE OF A TEMPERATURE- CONTROLLED SPACE, THEY SHALL BE INSTALLED IN A WEATHER-PROOF AND TEMPERATURE-RESISTANT MANNER.
12. ALL CONDUITS/CHASES AND ROUTING OF CONDUITS/CHASES FOR BULK CO_2 TANK LINES AS REQUIRED. ARCHITECT TO ASSIGN SCOPE AND SHOW ROUTING OF CHASE THROUGH BUILDING. CONDUITS SHALL HAVE A SMOOTH INTERIOR FINISH. VERIFY SIZES WITH OWNER/OPERATOR'S LOCAL GAS (CO_2) COMPANY. EXTERIOR FILL BOX CANNOT BE MORE THAN 50'-0" (15M) FROM DELIVERY TRUCK. TOTAL LINE RUN FROM BULK CO_2 TANK TO EXTERIOR FILL BOX CANNOT BE MORE THAN 50'-0" (15M). PROVIDE CO_2 DETECTOR AT THE BULK CO_2. CONDUIT CHASEWAYS SHALL BE SEALED WITH EXPANDING FOAM INSULATION AFTER INSTALLATION IS COMPLETE AND COVER TO A SMOOTH AND CLEANABLE CONDITION.

M-D. ADDITIONAL NOTES

1. RUN REFRIGERATION LINES TO REMOTE REFRIGERATION SYSTEM AS INDICATED ON THE EQUIPMENT SCHEDULE. KEC TO FURNISH FIELD-COORDINATED REFRIGERATION RUN LINE DRAWINGS.
2. REMOTE REFRIGERATION SYSTEM ON WALK-IN BOX, KEC TO PROVIDE STRUCTURAL SUPPORT FOR WEIGHT AND FOR MAINTENANCE. ARCHITECT TO PROVIDE ADEQUATE ACCESS FOR MAINTENANCE.
3. CEILING MOUNTED EQUIPMENT SHALL BE FULLY SUPPORTED FROM STRUCTURAL CEILING ABOVE AND PROVIDE ANTI-SWAY BRACING WELDED TO VERTICAL SUPPORTS.

BC&V Symbol Legend

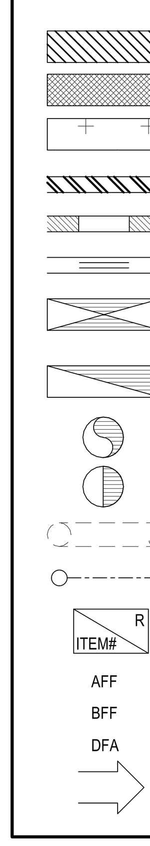

FLOOR DEPRESSION
MASONRY PAD
TRANSIT - LEVEL FINISH
NON-COMBUSTIBLE WALL MATERIAL (VERIFY REQUIREMENTS with LOCAL CODES)
FINISHED WALL OPENING
WALL BACKING
SUPPLY DUCT
EXHAUST DUCT
DIRECT CONNECT FLUE
AIR MOVEMENT / HEAT REMOVAL
BEVERAGE CONDUIT
REFRIGERATION LINE CONNECTION
R / ITEM# — TAG INDICATING REMOTE REFRIGERATION LINE
AFF — ABOVE FINISHED FLOOR
BFF — BELOW FINISHED FLOOR
DFA — DOWN FROM ABOVE
REFER to INDICATED NOTE

IDENTIFICATION STAMP
DIV. OF THE STATE ARCHITECT
APP: 03-122528 INC:
REVIEWED FOR
SS ☑ FLS ☑ ACS ☑
DATE: 01/06/2025

PTN: 63529-385 FILE: 15-H3

HIGHLAND HIGH SCHOOL

CAFETERIA REHABILITATION AND MODERNIZATION
2900 ROYAL SCOTS WAY
FOR
KERN HIGH SCHOOL DISTRICT
BAKERSFIELD, KERN COUNTY, CALIFORNIA

ARCHITECT INC.
1601 NEW STINE ROAD, SUITE 280
BAKERSFIELD, CA 93309
PH: (661) 397-4377
FAX: (661) 397-4378
WWW.SCARCHITECT.COM

LICENSED ARCHITECT STEPHEN J. CORBIN No. C-16788 REN 11/30/25 STATE OF CALIFORNIA
STEPHEN J. CORBIN, NCARB, AIA, LEED ®-AP

CHECK AND VERIFY ALL DIMENSIONS BEFORE PROCEEDING WITH THE WORK. REPORT DISCREPANCIES TO THE ARCHITECT. ALL CONSTRUCTION SHALL CONFORM TO THE C.B.C.

ricca design STUDIOS
5613 DTC Parkway | Suite 100
Greenwood Village, CO 80111
303.221.0500
www.ricca.com

Foodservice Building Conditions & Ventilation Plan

MARK	DATE	REVISIONS
1		
2		
3		

JOB NO. 22075
DRAWN: Ricca
CHECKED: Ricca
DATE: 09/20/2024

QF400-3
8 OF 21 SHEETS

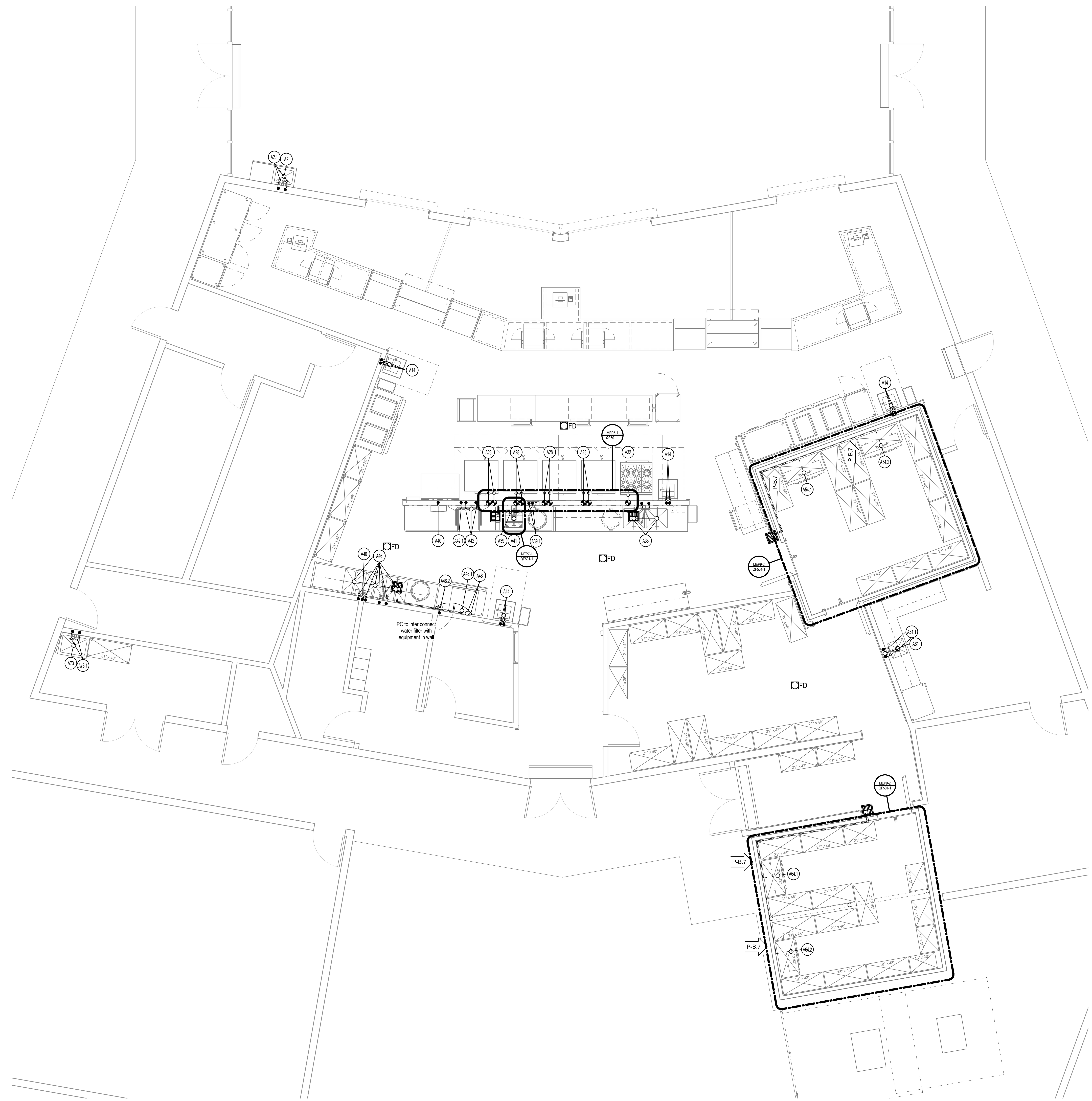

1 Level 1 Plumbing Plan
SCALE: 1/4" = 1'-0"

TRUE NORTH
PLAN NORTH

PLUMBING NOTES

THE NOTES BELOW MAY APPLY TO ONE OR ALL DESIGN, CONSTRUCTION, OR CLOSE-OUT PHASES OF THIS PROJECT

P-A. GENERAL NOTES

1. THE ASSIGNED KITCHEN EQUIPMENT CONTRACTOR SHALL PERFORM A THOROUGH PROJECT REVIEW OF ALL CURRENT CONTRACT DOCUMENTS THAT APPLY TO FOODSERVICE ZONES AND EQUIPMENT. KITCHEN EQUIPMENT CONTRACTOR SHALL GENERATE ENGINEERING INDEPENDENT OF THIS SHEET CONFORMING TO FIELD CONDITIONS WHERE REQUIRED AND MANUFACTURER'S REQUIREMENTS FOR EQUIPMENT SPECIFIED AND THUS INTENDED TO BE PURCHASED AND SET-IN-PLACE.
2. ALL PLUMBING WORK SHOWN ON THIS PLAN MUST COMPLY WITH ALL APPLICABLE CODES AND REGULATIONS AS THEY APPLY TO FOODSERVICE EQUIPMENT AND ZONES.
3. ALL WORK SERVICES, INTERCONNECTIONS, FIELD CONNECTIONS, AND FINAL CONNECTIONS INDICATED ON THIS PLAN SHALL BE COMPLETED BY CONTRACTORS OTHER THAN THE KITCHEN EQUIPMENT CONTRACTOR UNLESS SPECIFICALLY ASSIGNED TO THE KITCHEN EQUIPMENT CONTRACTOR.
4. THIS PLAN IS INTENDED TO SHOW PLUMBING REQUIREMENTS FOR FOODSERVICE EQUIPMENT ONLY. REFER TO ARCHITECTURAL/ENGINEERING PLANS FOR SCOPE OUTSIDE OF FOODSERVICE EQUIPMENT.
5. THIS DRAWING IS ISSUED FOR DESIGN INTENT PURPOSES ONLY. REFER TO THE KITCHEN EQUIPMENT CONTRACTOR'S DIMENSIONED ROUGH-IN DRAWINGS AND APPROVED SHOP DRAWINGS FOR SUPPLEMENTAL COORDINATION AND INSTALLATION REQUIREMENTS FOR FOODSERVICE EQUIPMENT ON THIS PLAN.
6. ALL EQUIPMENT PROVIDED BY OTHERS -INCLUDING BY OWNER/OPERATOR/PURVEYOR- SHOWN ON THIS PLAN ARE MINIMUM GUIDELINES ONLY. VERIFY INFORMATION, TECHNICAL DATA, AND SPECIFICATIONS FOR THIS EQUIPMENT. GENERAL CONTRACTOR TO VERIFY AND MAKE FINAL ROUGH-IN CONNECTIONS AS REQUIRED.
7. EXISTING, TO-REMAIN-IN-PLACE, OR TO-BE-RELOCATED EQUIPMENT SHOWN ON THIS PLAN ARE MINIMUM GUIDELINES ONLY AND MUST BE VERIFIED. CONTACT OWNER/OPERATOR FOR INFORMATION, TECHNICAL DATA, AND SPECIFICATIONS FOR THIS EQUIPMENT. GENERAL CONTRACTOR TO VERIFY, DISCONNECT, AND MAKE FINAL ROUGH-IN CONNECTIONS AS REQUIRED.
8. GENERAL CONTRACTOR TO VERIFY, DISCONNECT, AND MAKE FINAL ROUGH-IN CONNECTIONS AS REQUIRED.

P-B. PLUMBING NOTES

PLUMBING ENGINEER IS RESPONSIBLE FOR SPECIFYING THE FOLLOWING. PLUMBING CONTRACTOR IS RESPONSIBLE FOR PROVIDING, INSTALLING, AND MAKING FINAL CONNECTIONS TO FOODSERVICE EQUIPMENT AND SHALL PROVIDE THE FOLLOWING.

1. DRAIN-LINES, FITTINGS, VALVES, AND ALL PLUMBING COMPONENTS SERVICING FOODSERVICE EQUIPMENT SHALL BE CAPABLE TO WITHSTAND HOT WATER TEMPERATURES MORE THAN 140-200 DEGREES FAHRENHEIT, DRAIN TEMPERATURES OF 130 DEGREES FAHRENHEIT TO BOILING (SOMETIMES UNDER PRESSURE), AND STEAM (IF APPLICABLE) TEMPERATURES AS PER DESIGN PRESSURES. PROVIDE MINIMUM 6'-0" (1.8M) LENGTH CAST IRON PIPING FROM FLOOR SINKS TO WITHSTAND HOT WATER TEMPERATURES.
2. PRESSURE-REDUCING OR REGULATING VALVES, FAUCETS AND WATER INLETS, IN-LINE WATER FILTERS, VACUUM BREAKERS, BACKFLOW PREVENTERS, ANTI-SCALD VALVES, STAINLESS STEEL DOUBLE CHECK VALVES FOR SODA SYSTEM, ETC. NOT OTHERWISE SUPPLIED TO FOODSERVICE EQUIPMENT AS REQUIRED BY LOCAL CODES AND MANUFACTURER'S SPECIFICATIONS.
3. WASTE LINES, DIRECT AND INDIRECT, TO BE PITCHED DOWNWARD AND TO HAVE ADEQUATE CLEAN-OUT PROVISIONS PER CODE.
4. FLOOR SINKS SHOULD BE SPECIFIED AND INSTALLED WITH TOP GRATES AND REMOVABLE SEDIMENT BUCKET INCLUDED. FLOOR SINK TOP TO BE SET FLUSH WITH FINISHED FLOOR UNLESS DIRECTED OTHERWISE BY LOCAL CODE. PROVIDE ACID-RESISTANT FLOOR SINKS FOR EQUIPMENT THAT DISCHARGES CO2 (I.E. SODA AND WATER DISPENSERS). VERIFY COMPLIANCE WITH LOCAL CODES AND REGULATIONS.
5. AREA FLOOR DRAINS IN QUANTITY AND PROPOSED LOCATION AS COORDINATED WITH OWNER/OPERATOR. SLOPE FLOORS TO AREA DRAINS AT MINIMUM OF 1/16" (.40MM) PER FOOT (304MM) WITHIN A 6' (1.8M) RADIUS OR PER LOCAL CODE.
6. GREASE TRAPS, INCLUDING SIZING, AS REQUIRED. INSTALL GREASE TRAPS OUTSIDE OF BUILDING WHENEVER POSSIBLE. INSTALLATION WITHIN THE BUILDING MUST COMPLY WITH LOCAL CODES AND REGULATIONS. NOTIFY RICCA DESIGN STUDIOS WHEN INSTALLATION MUST BE WITHIN ANY KITCHEN AREAS OR FOODSERVICE ZONES.
7. PROVIDE AND INSTALL INDIRECT DRAIN LINE FROM WALK-IN OR ROOM COOLING EVAPORATOR COILS TO ASSIGNED FLOOR SINK. DRAIN LINES TO BE P-TRAPPED AT EJECTION POINT OUTSIDE OF COLD ZONE. DRAIN LINES WITHIN FREEZER CAVITIES TO BE INSULATED AND WRAPPED WITH HEAT TAPE PROVIDED BY E.C.
8. NOTES CONCERNING PLUMBING ROUGH-INS:
   A. FURNISH AND INSTALL ALL WATER, WASTE, GAS, AND STEAM LINES AND SIZE SERVICE LINES TO PROVIDE FULL-FLOW VOLUME FOR ALL EQUIPMENT SUPPLIED BY RESPECTIVE MAINS AND BRANCHES. PROVIDE BRASS BALL VALVE (MINIMUM) STOP VALVES AND TAG ROUGH-INS WITH THE APPROPRIATE IDENTIFYING LABELS. SERVICE LINES STUBBED OUT OF WALLS, UP FROM FINISHED FLOORS, OR A CONCRETE CURB A MINIMUM OF 2" (50MM). VENT PIPES MUST BE CONCEALED IN WALLS OR COLUMN CHASE. USE A LOOP-VENT OR AIR GAP ASSEMBLY FOR ISLAND FIXTURES. ALL FLOOR PENETRATIONS MUST BE SEALED WATERTIGHT.
   B. WASTE LINES SHOWN ARE DESIGNED TO COMPLY WITH THE BEST KNOWN AND GENERALLY-ACCEPTED HEALTH AND SANITARY CONDITIONS AND CODES. PLUMB LINES TO ENSURE NO INTERFERENCE WITH THE INTENDED USE OR SERVICING OF FOODSERVICE EQUIPMENT. RUN LINES BELOW EQUIPMENT AT THE HIGHEST POSSIBLE ELEVATION ABOVE FINISHED FLOOR. NO LINES ARE TO LAY ON OR BE SECURED TO THE FLOOR. FIELD-CUTTING OF ANY FOODSERVICE EQUIPMENT TO MAKE WAY FOR WASTE LINES WITHOUT CONSENT OF KITCHEN EQUIPMENT CONTRACTOR IS PROHIBITED.
   C. SUPPLY 140-DEGREE FAHRENHEIT HOT WATER TO ALL WAREWASHING EQUIPMENT, 105-DEGREE FAHRENHEIT HOT WATER TO HAND-WASH SINKS AND 120-DEGREE FAHRENHEIT HOT WATER TO ALL OTHER EQUIPMENT UNLESS OTHERWISE INSTRUCTED BY CODE. INSULATE WATER AND STEAM LINES (IF REQUIRED) TO CONFORM WITH ACCEPTED PRACTICE. EXPOSED PIPES AND FITTINGS ABOVE A WORKING HEIGHT OF 34" (863MM) ABOVE FINISHED FLOOR SHALL BE CHROME-PLATED OR COVERED WITH A STAINLESS-STEEL SLEEVE.
   D. SIZE FUEL GAS SERVICE LINES TO PROVIDE THE REQUIRED BTU RATING INDICATED FOR THE EQUIPMENT, AT A LOW PRESSURE OF APPROXIMATELY 7" TO 9" WATER COLUMN. INSTALL AUTOMATIC MECHANICAL SHUT-OFF VALVES - FURNISHED BY FIRE SUPPRESSION SYSTEM CONTRACTOR - IN GAS SUPPLY LINES TO EQUIPMENT UNDER EXHAUST HOOD ASSEMBLIES.
   E. PROVIDE CHILLED WATER (OR CONDENSER WATER) TO AND FROM COMPRESSOR FROM COOLING TOWER (OR BUILDING'S CONDENSER SYSTEM) AS SHOWN. PROVIDE RICCA DESIGN STUDIOS WITH CHILLED WATER TEMPERATURE TO PROPERLY ENGINEER REFRIGERATION EQUIPMENT. CHILLED WATER PRESSURE SHALL BE PROVIDED AT NO GREATER THAN 150 PSI.
9. NOTES CONCERNING PLUMBING CONNECTIONS:
   A. ALL WATER, GAS, AND STEAM (WHERE APPLICABLE) SERVICES FOR PORTABLE AND COUNTERTOP EQUIPMENT MUST BE CONNECTED TO THE EQUIPMENT WITH A COMMERCIAL TYPE FLEXIBLE HOSE AND QUICK DISCONNECT FITTINGS TO MEET A.G.A. APPROVAL FOR COMMERCIAL KITCHEN EQUIPMENT.
   B. WATER PROVIDED FOR STEAM-PRODUCING EQUIPMENT MUST HAVE A WATER HARDNESS NO GREATER THAN 2.0 GRAINS AND A PH LEVEL BETWEEN 7.0 AND 7.5.
   C. WATER USED FOR COOLING WATER TO CONDENSING UNITS OR COMPRESSORS MUST BE TREATED TO INHIBIT THE FORMATION OF DEPOSITS IN THE CONDENSING TUBES.
   D. STEAM (WHERE APPLICABLE) THAT COMES IN DIRECT CONTACT WITH FOOD, FOOD HOLDING EQUIPMENT, OR WAREWASHING EQUIPMENT MUST BE POTABLE STEAM.
   E. INTERPIPE HOT WATER SUPPLY LINES BETWEEN BOOSTER HEATER AND WAREWASHING EQUIPMENT WHEN SPECIFIED SEPARATELY. LINES SHALL BE INSULATED THE LENGTH OF THE LINE-RUN.
   F. INTERPIPE WATER LINES BETWEEN WATER WASH VENTILATOR ASSEMBLIES AND CONTROL PANELS. SUPPLY A MINIMUM OF 140-DEGREE FAHRENHEIT HOT WATER AT CONTROL PANEL. LINES SHALL BE INSULATED THE LENGTH OF THE LINE-RUN. REFER TO MANUFACTURER DRAWINGS FOR EXACT REQUIREMENTS.
   G. INTERPIPE CENTRALIZED WASTE GREASE PLUMBING LINE FROM PUMPING/COLLECTION STATION TO GREASE WASTE COLLECTION TANK IN PITCHED MANNER PER MANUFACTURER'S DIRECTION. PROVIDE HEAT TRACE CABLE/TAPE ON LINE-RUN WHERE AMBIENT AIR TEMPERATURE ALONG LINE- RUN IS BELOW 70 DEGRESS FAHRENHEIT. HEAT TRACE CABLE/TAPE SHALL BE PROVIDED BY E.C.
   H. WASTE CONNECTIONS FOR INDIVIDUAL SECTIONS OF WATER WASH VENTILATORS TO A MAIN DRAIN CONNECTION. REFER TO MANUFACTURER'S DRAWINGS FOR EXACT REQUIREMENTS.
   I. INSTALL IN-LINE WATER FILTERS AS WELL AS INCOMING AND OUTGOING LINES AS FURNISHED BY KITCHEN EQUIPMENT CONTRACTOR.
   J. WATER PIPES BETWEEN THE BACKFLOW PREVENTER AND WATER FILTERS SHALL BE STAINLESS STEEL, NOT COPPER OR ALLOYS CONTAINING COPPER (SUCH AS BRASS).
   K. WATER PIPES BETWEEN THE BACKFLOW PREVENTER AND WATER FILTER AT SODA SYSTEM CARBONATOR SHALL BE STAINLESS STEEL - NOT COPPER OR ALLOYS CONTAINING COPPER (SUCH AS BRASS). DRAIN PIPE AT SODA DISPENSERS SHALL BE STAINLESS STEEL OR PLASTIC PIPE WASTE LINE UNTIL A POINT WHERE THE WASTE HAS BEEN DILUTED BY AN UPSTREAM FIXTURE.
   L. INTERCONNECT FOOD WASTE SYSTEMS PER MANUFACTURER'S DRAWINGS.
   M. EQUIPMENT THAT IS CONNECTED TO POTABLE WATER AND UTILIZES AUTOMATICALLY DISPENSED CHEMICALS FOR CLEANING SHALL HAVE AN ACCESSIBLE BACK FLOW PREVENTION DEVICE INSTALLED.
   N. DRAIN LINES FROM ICE BINS ARE TO BE INSULATED THE ENTIRE LINE-RUN TO FLOOR SINK.

P-C. ADDITIONAL NOTES

Plumbing Symbol Legend

Symbol	Description
	HOT / COLD WATER ROUGH-IN and CONNECTION
	DIRECT WASTE (DW) ROUGH-IN and CONNECTION
	INDIRECT WASTE (IW)
	FUEL GAS ROUGH-IN and CONNECTION
	STEAM SUPPLY ROUGH-IN and CONNECTION
	STEAM CONDENSATE RETURN ROUGH-IN and CONNECTION
CS	COOLING WATER SUPPLY ROUGH-IN and CONNECTION
CR	COOLING WATER RETURN ROUGH-IN and CONNECTION
	HOSE BIBB, HOT or COLD WATER
	HOSE BIBB, HOT and COLD WATER with MIXING VALVE and VACUUM BREAKER
A	COMPRESSED AIR CONNECTION
	FLOOR SINK AND GRATE (FS)
FD	AREA FLOOR DRAIN (FD)
FFD	FUNNEL FLOOR DRAIN (FFD)
AFF	ABOVE FINISHED FLOOR
BFF	BELOW FINISHED FLOOR
BTC	BRANCH TO CONNECTION
DFA	DOWN FROM ABOVE
	REFER to INDICATED NOTE

IDENTIFICATION STAMP
DIV. OF THE STATE ARCHITECT
APP: 03-122528 INC:
REVIEWED FOR
SS ☑ FLS ☑ ACS ☑
DATE: 01/06/2025

PTN: 63529-385 FILE: 15-H3

HIGHLAND HIGH SCHOOL

CAFETERIA REHABILITATION AND MODERNIZATION
2900 ROYAL SCOTS WAY
FOR
KERN HIGH SCHOOL DISTRICT
BAKERSFIELD, KERN COUNTY, CALIFORNIA

SC ARCHITECT inc.
1601 NEW STINE ROAD, SUITE 280
BAKERSFIELD, CA 93309
PH: (661) 397-4377
FAX: (661) 397-4378
WWW.SCARCHITECT.COM

LICENSED ARCHITECT STEPHEN J. CORBIN No. C-16788 REN 11/30/25 STATE OF CALIFORNIA
STEPHEN J. CORBIN, NCARB, AIA, LEED®-AP

CHECK AND VERIFY ALL DIMENSIONS BEFORE PROCEEDING WITH THE WORK. REPORT DISCREPANCIES TO THE ARCHITECT. ALL CONSTRUCTION SHALL CONFORM TO THE C.B.C.

ricca design STUDIOS
5613 DTC Parkway | Suite 100
Greenwood Village, CO 80111
303.221.0500
www.ricca.com

Foodservice Plumbing Plan

MARK	DATE	REVISIONS
1		
2		
3		

JOB NO. 22075
DRAWN: Ricca
CHECKED: Ricca
DATE: 09/20/2024

QF400-4
9 OF 21 SHEETS

Level 1 Electrical Plan
SCALE: 1/4" = 1'-0"

TRUE NORTH
PLAN NORTH

ELECTRICAL NOTES

THE NOTES BELOW MAY APPLY TO ONE OR ALL DESIGN, CONSTRUCTION, OR CLOSE-OUT PHASES OF THIS PROJECT

E-A. GENERAL NOTES

1. THE ASSIGNED KITCHEN EQUIPMENT CONTRACTOR SHALL PERFORM A THOROUGH PROJECT REVIEW OF ALL CURRENT CONTRACT DOCUMENTS THAT APPLY TO FOODSERVICE ZONES AND EQUIPMENT. KITCHEN EQUIPMENT CONTRACTOR SHALL GENERATE ENGINEERING INDEPENDENT OF THIS SHEET CONFORMING TO FIELD CONDITIONS WHERE REQUIRED AND MANUFACTURER'S REQUIREMENTS FOR EQUIPMENT SPECIFIED AND THUS INTENDED TO BE PURCHASED AND SET-IN-PLACE.
2. ALL ELECTRICAL WORK SHOWN ON THIS PLAN MUST COMPLY WITH ALL APPLICABLE CODES AND REGULATIONS AS THEY APPLY TO FOODSERVICE EQUIPMENT AND ZONES.
3. ALL WORK SERVICES, INTERCONNECTIONS, FIELD CONNECTIONS, AND FINAL CONNECTIONS INDICATED ON THIS PLAN SHALL BE COMPLETED BY CONTRACTORS OTHER THAN THE KITCHEN EQUIPMENT CONTRACTOR UNLESS SPECIFICALLY ASSIGNED TO THE KITCHEN EQUIPMENT CONTRACTOR.
4. THIS PLAN IS INTENDED TO SHOW ELECTRICAL REQUIREMENTS FOR FOODSERVICE EQUIPMENT ONLY. ELECTRICAL INFORMATION IS BASED ON A 60 HERTZ ELECTRICAL SYSTEM AND IS INTENDED TO SHOW FOODSERVICE FIXTURES AND EQUIPMENT RECEPTACLE TYPES, LOCATIONS, LOADS, AND CONNECTION POSITIONS ONLY. FURNISH ANY ADDITIONAL RECEPTACLES AS REQUIRED BY LOCAL CODES OR AS REQUESTED BY OWNER. REFER TO ARCHITECTURAL/ENGINEERING PLANS FOR SCOPE OUTSIDE OF FOODSERVICE EQUIPMENT.
5. THIS DRAWING IS ISSUED FOR DESIGN INTENT PURPOSES ONLY. REFER TO THE KITCHEN EQUIPMENT CONTRACTOR'S DIMENSIONED ROUGH-IN DRAWINGS AND APPROVED SHOP DRAWINGS FOR SUPPLEMENTAL COORDINATION AND INSTALLATION REQUIREMENTS FOR FOODSERVICE EQUIPMENT ON THIS PLAN.
6. ALL EQUIPMENT PROVIDED BY OTHERS -INCLUDING BY OWNER/OPERATOR/PURVEYOR-SHOWN ON THIS PLAN ARE MINIMUM GUIDELINES ONLY. VERIFY INFORMATION, TECHNICAL DATA, AND SPECIFICATIONS FOR THIS EQUIPMENT. GENERAL CONTRACTOR AND KITCHEN EQUIPMENT CONTRACTOR TO VERIFY AND MAKE FINAL ROUGH-IN CONNECTIONS AS REQUIRED.
7. EXISTING, TO-REMAIN-IN-PLACE, OR TO-BE-RELOCATED EQUIPMENT SHOWN ON THIS PLAN ARE MINIMUM GUIDELINES ONLY AND MUST BE VERIFIED. CONTACT OWNER/OPERATOR FOR INFORMATION, TECHNICAL DATA, AND SPECIFICATIONS FOR THIS EQUIPMENT. GENERAL CONTRACTOR TO VERIFY, DISCONNECT, AND MAKE FINAL ROUGH-IN CONNECTIONS AS REQUIRED.
8. ENGINEERS SHALL PROVIDE AT LEAST 15% ADDITIONAL POWER THAN THE MINIMUM REQUIRED WITHIN KITCHEN/CULINARY ZONES FOR CURRENT OR FUTURE EQUIPMENT NEEDS.
9. ANY EXPOSED LOCATION SERVICE STUBBED UP OUT OF THE FLOOR MUST BE PROTECTED AND INSTALLED IN A MANNER THAT WILL PREVENT DAMAGE FROM WATER OR BY COLLISION WITH PORTABLE KITCHEN EQUIPMENT, HEAVILY-LOADED CARTS, OR FLOOR CLEANING EQUIPMENT.
10. PRIOR TO THE INSTALLATION OF FOODSERVICE EQUIPMENT, THE KITCHEN EQUIPMENT CONTRACTOR MUST CONFIRM THAT ELECTRICAL WIRING HAS BEEN PULLED THROUGH JUNCTION BOXES AND THAT LIGHTING FIXTURES ARE WORKING.

E-B. ELECTRICAL NOTES

ELECTRICAL ENGINEER IS RESPONSIBLE FOR SPECIFYING THE FOLLOWING. ELECTRICAL CONTRACTOR IS RESPONSIBLE FOR PROVIDING, INSTALLING, AND MAKING FINAL CONNECTIONS TO FOODSERVICE EQUIPMENT AND SHALL PROVIDE THE FOLLOWING.

1. ALL WIRING, WIRING CONDUITS, JUNCTION BOXES, ELECTRICAL RECEPTACLES, SWITCHES, COVER PLATES, PLUG MOLDING, ETC. AS SHOWN ON PLAN AND NOT PROVIDED BY OTHERS. RUN ALL OF THE ELECTRICAL SERVICE LINES IN WALLS OR CONCEALED WHEREVER POSSIBLE. ALL EXPOSED SERVICES, COMPONENTS, AND CONNECTIONS SHALL BE VAPOR AND WATER-TIGHT.
2. ALL DISCONNECTS OR OTHER DEVICES AS REQUIRED BY LOCAL CODES. DO NOT LOCATE DISCONNECTS OR OTHER DEVICES (OTHER THAN JUNCTION BOX CONNECTIONS OR CORD & PLUG RECEPTACLES) BEHIND COOKING EQUIPMENT OR BELOW EXHAUST HOOD ASSEMBLIES.
3. ALL SHUNT-TRIP CIRCUIT BREAKERS OR DISCONNECTIONS FOR FIRE SUPPRESSION SYSTEM SHUT-OFF OF ALL ELECTRICAL BELOW AND IN EXHAUST HOODS INTERWIRED WITH FIRE SUPPRESSION AS REQUIRED BY N.F.P.A. STANDARDS.
4. ALL RECEPTACLES, CORD & PLUG ASSEMBLIES TO BE NEMA-SIZED, UL-APPROVED, AND RATED FOR THE SERVICE INDICATED ON THESE PLANS. PROVIDE GFCI RECEPTACLES AS REQUIRED BY THE NEC AND LOCAL CODES. ENSURE THAT GFCI RECEPTACLES AND NOT BREAKERS-ONLY ARE ALLOWED FOR APPLICABLE FOODSERVICE EQUIPMENT.
5. AT ALL WALK-IN COOLER/FREEZER LOCATIONS SHOWN ON THIS PLAN:
   A. ALL VAPOR-PROOF LIGHT FIXTURES, AS PROVIDED BY KITCHEN EQUIPMENT CONTRACTOR.
   B. ALL DISCONNECTS AND SWITCHES AT BLOWER COILS.
   C. ALL VAPOR-PROOF DUPLEX CONVENIENCE RECEPTACLES AS INDICATED ON THIS PLAN.
   D. ALL INTERCONNECTIONS FOR ELECTRICAL COMPONENTS IN THE WALK-IN COOLER/FREEZER COMPARTMENTS.
   E. ALL INTERCONNECTIONS AND SWITCHES FOR FREEZER EVAPORATORS AND COMPRESSORS.
   F. VERIFY EXACT WIRE SIZES WITH MANUFACTURERS SPECIFICATIONS. KITCHEN EQUIPMENT CONTRACTOR TO PROVIDE WIRING DIAGRAM FOR ALL WIRING REQUIRED FOR WALK-IN COOLER/FREEZER COMPARTMENTS.
6. ALL WIRING AND CONDUITS INTO WALK-IN COOLER/FREEZER COMPARTMENTS FOR THE FOLLOWING:
   A. EACH EVAPORATOR COIL
   B. EACH VAPOR-PROOF CEILING LIGHT
   C. EACH PERSONNEL ALARM SWITCH AND LIGHT
   D. EACH DOOR HEATER AND ANY FREEZER COIL DRAIN HEATERS REQUIRED
   E. EACH HIGH-TEMPERATURE WARNING ALARM SYSTEM ALL PENETRATIONS MUST BE MADE THROUGH THE CEILING INSULATION AND ARE REQUIRED TO BE VAPOR-TIGHT. ALL CONDUIT TO RUN ABOVE THE WALK-IN COMPARTMENTS. INSTALLATION OF CONDUIT LINE-RUNS INSIDE OF WALK-IN COMPARTMENTS IS PROHIBITED.
7. ALL WIRING TO AND INTERWIRING BETWEEN EXHAUST HOOD COMPONENTS. INCLUDING, BUT NOT LIMITED TO: CONTROL SYSTEMS AND WIRING, DAMPERS, SOLENOIDS, LIGHTS, VFDS, FIRE SUPPRESSION SYSTEMS, BUILDING MANAGEMENT SYSTEM, ETC. AS SHOWN ON MANUFACTURER'S DRAWINGS AND ON MECHANICAL ENGINEER'S DRAWINGS.
8. SWITCHES/CONTROLS FOR EXHAUST HOODS, EXHAUST FANS, SUPPLY FANS, MAKEUP FANS, AND HVAC COMPONENTS AS SPECIFIED BY THE MECHANICAL ENGINEER.
9. ALL REQUIRED MATERIALS TO MAKE FINAL CONNECTIONS TO ALL FOODSERVICE EQUIPMENT SHOWN ON THIS PLAN.
10. FOR FLOOR PENETRATION ROUGH-INS, UTILIZE A SINGLE CONDUIT STUB-UP FOR MULTIPLE CIRCUITS WHEREVER POSSIBLE.
11. FLOOR RECEPTACLES IN FRONT-OF-HOUSE, NON-KITCHEN AREAS, BUT UTILIZED BY SERVICE TEAM, SHOULD BE VAPOR-PROOF FLUSH TYPE, UNLESS OTHERWISE NOTED. NO FLUSH TYPE RECEPTACLES SHALL BE INSTALLED IN KITCHEN AREAS.
12. INTERCONNECT/INTERWIRE FOOD WASTE SYSTEM CONTROL PANEL WITH FOOD WASTE SYSTEM COMPONENTS AS SHOWN ON MANUFACTURER'S DRAWINGS.
13. WHERE INDICATED, THIS COUNTER OR TABLE WILL BE PROVIDED BY THE KITCHEN EQUIPMENT CONTRACTOR COMPLETELY PRE-WIRED WITH A BUILT-IN CIRCUIT BREAKER MINI-PANEL/LOAD CENTER- SIZED AS SPECIFIED BY THE ELECTRICAL ENGINEER- PER THE INDIVIDUAL EQUIPMENT REQUIREMENTS NOTED ON THE PLANS AND SCHEDULES. ALL FINAL CONNECTIONS, INCLUDING INTERWIRING BETWEEN COUNTER SEGMENTS, TO BE MADE BY THE ELECTRICAL CONTRACTOR. DATA LINE RUNS SHALL BE SEPARATE FROM ELECTRICAL CONDUIT AND TERMINATE WITHIN DATA PULL BOX. DATA LINE RUNS AND FINAL DATA CONNECTIONS BY ELECTRICAL CONTRACTOR.
14. WHERE INDICATED, THIS COUNTER OR TABLE WILL BE PROVIDED BY THE KITCHEN EQUIPMENT CONTRACTOR COMPLETELY PRE-WIRED TO A BUILT-IN ACCESSIBLE PULL BOX, WITH PIGTAILS TAGGED WITH THE REQUIREMENTS AND IDENTIFICATION OF THE EQUIPMENT THEY SERVE. ELECTRICAL COMPONENTS PRE-WIRED TO THIS PULL BOX ARE AS NOTED ON THE PLANS AND SCHEDULES. ALL FINAL CONNECTIONS, INCLUDING INTERWIRING BETWEEN COUNTER SEGMENTS, TO BE MADE BY THE ELECTRICAL CONTRACTOR. DATA LINE RUNS SHALL BE SEPARATE FROM ELECTRICAL CONDUIT AND TERMINATE WITHIN DATA PULL BOX. DATA LINE RUNS AND FINAL DATA CONNECTIONS BY ELECTRICAL CONTRACTOR.
15. WHERE INDICATED, THIS COUNTER OR TABLE WILL BE PROVIDED BY THE GENERAL CONTRACTOR COMPLETELY PRE-WIRED TO A BUILT-IN ACCESSIBLE PULL BOX, WITH PIGTAILS TAGGED WITH THE REQUIREMENTS AND IDENTIFICATION OF THE EQUIPMENT THEY SERVE. ELECTRICAL COMPONENTS PRE-WIRED TO THIS PULL BOX ARE AS NOTED ON THE PLANS AND SCHEDULES. ALL FINAL CONNECTIONS, INCLUDING INTERWIRING BETWEEN COUNTER SEGMENTS, TO BE MADE BY THE ELECTRICAL CONTRACTOR. DATA LINE RUNS SHALL BE SEPARATE FROM ELECTRICAL CONDUIT AND TERMINATE WITHIN DATA PULL BOX. DATA LINE RUNS AND FINAL DATA CONNECTIONS BY ELECTRICAL CONTRACTOR.
16. CEILING-MOUNTED RETRACTABLE DROP CORD ASSEMBLY IN LOCATIONS SHOWN ON PLANS AND ELEVATIONS. RETRACTED CORD HEIGHT TO BE 6'-6" (2M) ABOVE FINISHED FLOOR. OVERALL CORD LENGTH NOT TO EXCEED FINISHED FLOOR TO FINISHED CEILING HEIGHT. E.C. TO PROVIDE CONCEALED UNI-STRUT REINFORCED SUPPORT TO STRUCTURE FOR DROP CORD OR RETRACTABLE CORD ASSEMBLY.

E-C. ADDITIONAL NOTES

Electrical Symbol Legend

- TAG INDICATING DEVICE INSTALLED in EQUIPMENT (by KEC or MANUFACTURER)
- PRE-WIRED BREAKER PANEL INSTALLED in EQUIPMENT (by KEC or MANUFACTURER)
- PB — PULL BOX INSTALLED in EQUIPMENT (by KEC or MANUFACTURER)
- CONDUIT STUB with FINAL CONNECTIONS to EQUIPMENT
- J — JUNCTION BOX (JB) with FINAL CONNECTIONS to EQUIPMENT
- DUPLEX CONVENIENCE RECEPTACLE (DCR)
- DUPLEX RECEPTACLE (DR)
- POWER RECEPTACLE, 1 PHASE
- POWER RECEPTACLE, 3 PHASE
- D — DROP RECEPTACLE - CORD (DRC)
- DRR — DROP RECEPTACLE - REEL (DRR)
- FLOOR RECEPTACLE, FLUSH OR PEDESTAL MOUNTED
- V — VAPOR-PROOF LIGHT FIXTURE
- DATA
- SWITCH (SW)
- LOW TEMP. LED LIGHT FIXTURE
- PLUG MOULDING
- AFF — ABOVE FINISHED FLOOR
- BFF — BELOW FINISHED FLOOR
- BTC — BRANCH TO CONNECTION
- DFA — DOWN FROM ABOVE
- REFER TO INDICATED NOTE

IDENTIFICATION STAMP
DIV. OF THE STATE ARCHITECT
APP: 03-122528 INC:
REVIEWED FOR
SS ☑ FLS ☑ ACS ☑
DATE: 01/06/2025

PTN: 63529-385 FILE: 15-H3

HIGHLAND HIGH SCHOOL
CAFETERIA REHABILITATION AND MODERNIZATION
2900 ROYAL SCOTS WAY
FOR
KERN HIGH SCHOOL DISTRICT
BAKERSFIELD, KERN COUNTY, CALIFORNIA

ARCHITECT INC.
1601 NEW STINE ROAD, SUITE 280
BAKERSFIELD, CA 93309
PH: (661) 397-4377
FAX: (661) 397-4378
WWW.SCARCHITECT.COM

LICENSED ARCHITECT
STEPHEN J. CORBIN
No. C-16788
REN 11/30/25
STATE OF CALIFORNIA

STEPHEN J. CORBIN, NCARB, AIA, LEED ®-AP

CHECK AND VERIFY ALL DIMENSIONS BEFORE PROCEEDING WITH THE WORK. REPORT DISCREPANCIES TO THE ARCHITECT. ALL CONSTRUCTION SHALL CONFORM TO THE C.B.C.

ricca design STUDIOS
5613 DTC Parkway | Suite 100
Greenwood Village, CO 80111
303.221.0500
www.ricca.com

Foodservice Electrical Plan

MARK	DATE	REVISIONS
1		
2		
3		

JOB NO. 22075
DRAWN: Ricca
CHECKED: Ricca
DATE: 09/20/2024

TRUE NORTH

PLAN NORTH

1 Level 1 Elevation Key Plan
SCALE: 1/4" = 1'-0"

IDENTIFICATION STAMP
DIV. OF THE STATE ARCHITECT
APP: 03-122528 INC:
REVIEWED FOR
SS ☑ FLS ☑ ACS ☑
DATE: 01/06/2025

PTN: 63529-385 FILE: 15-H3

HIGHLAND HIGH SCHOOL
CAFETERIA REHABILITATION AND MODERNIZATION
2900 ROYAL SCOTS WAY
FOR
KERN HIGH SCHOOL DISTRICT
BAKERSFIELD, KERN COUNTY, CALIFORNIA

1601 NEW STINE ROAD, SUITE 280
BAKERSFIELD, CA 93309
PH: (661) 397-4377
FAX: (661) 397-4378
WWW.SCARCHITECT.COM

LICENSED ARCHITECT
STEPHEN J. CORBIN
No. C-16787
Exp. 12/31/25
STATE OF CALIFORNIA

STEPHEN J. CORBIN, NCARB, AIA, LEED ®AP

CHECK AND VERIFY ALL DIMENSIONS BEFORE PROCEEDING WITH THE WORK. REPORT DISCREPANCIES TO THE ARCHITECT. ALL CONSTRUCTION SHALL CONFORM TO THE C.B.C.

ricca design STUDIOS
5613 DTC Parkway | Suite 100
Greenwood Village, CO 80111
303.221.0500
www.ricca.com

Foodservice Elevations

MARK	DATE	REVISIONS
1		
2		
3		

JOB NO. 22075
DRAWN: Ricca
CHECKED: Ricca
DATE: 09/20/2024

QF500-1
11 OF 21 SHEETS

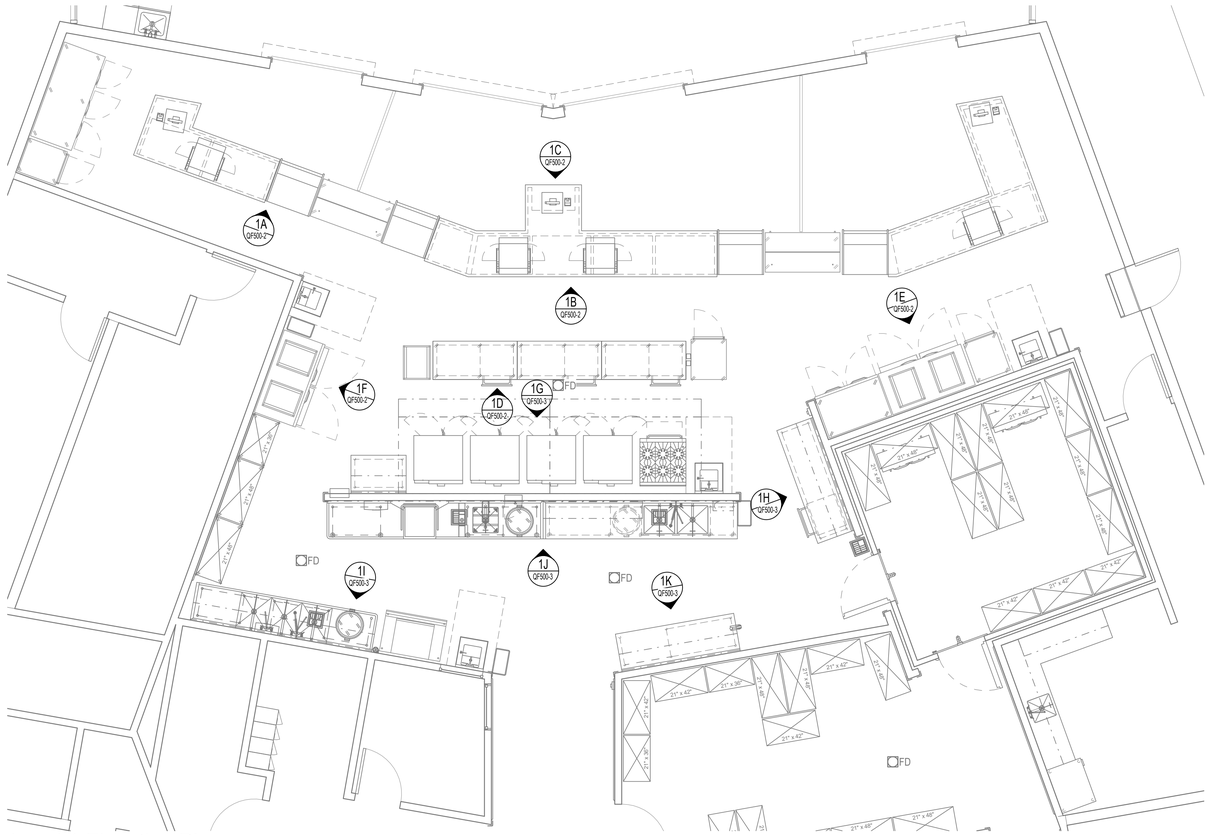

1 Level 1 Elevation Plan
SCALE: 1/4" = 1'-0"

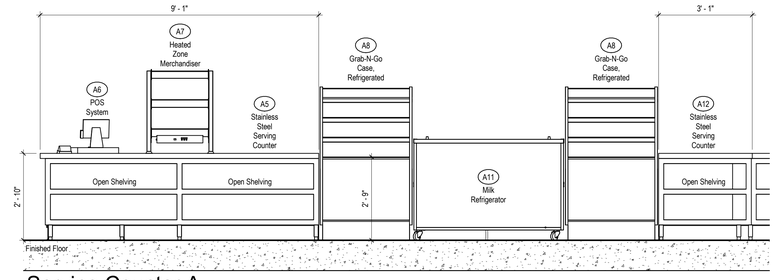

1A Serving Counter A
SCALE: 1/2" = 1'-0"

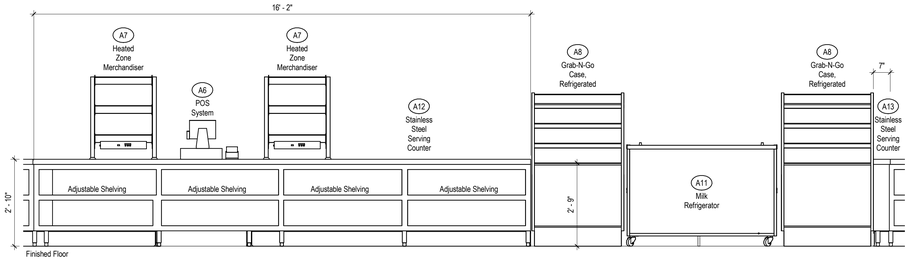

1B Serving Counter B
SCALE: 1/2" = 1'-0"

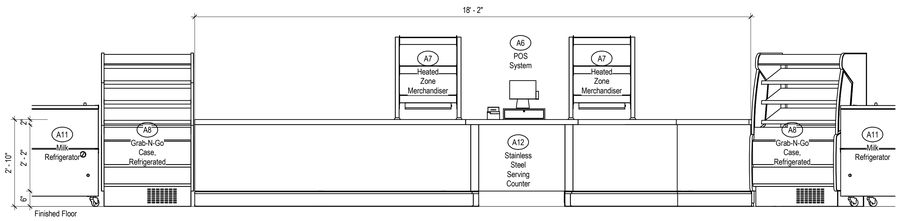

1C Serving Counter, Customer Side
SCALE: 1/2" = 1'-0"

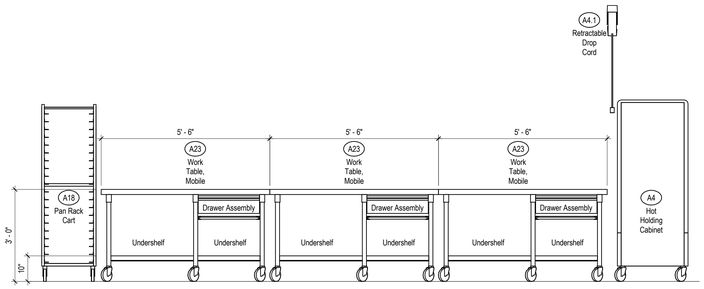

1D Mobile Work Tables
SCALE: 1/2" = 1'-0"

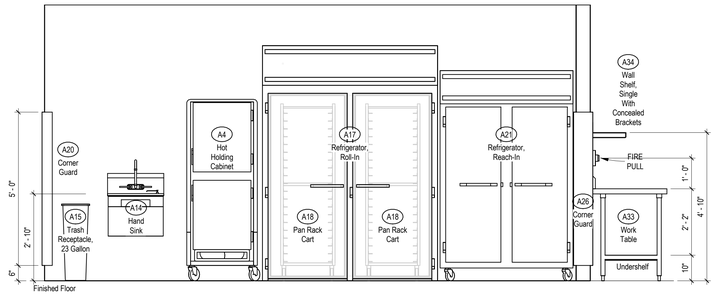

1E Serving Counter Support
SCALE: 1/2" = 1'-0"

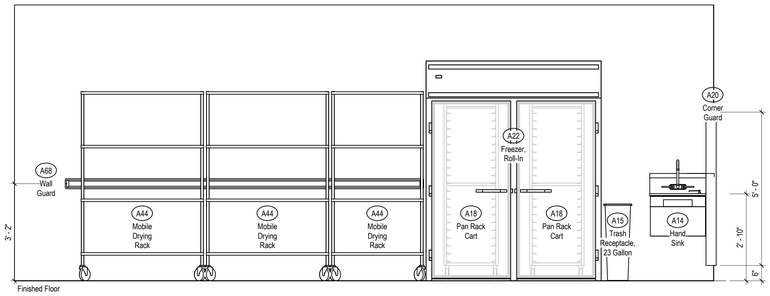

1F Drying Racks & Serving Counter Support
SCALE: 1/2" = 1'-0"

IDENTIFICATION STAMP
DIV. OF THE STATE ARCHITECT
APP: 03-122528 INC:
REVIEWED FOR
SS ☑ FLS ☑ ACS ☑
DATE: 01/06/2025

PTN: 63529-385 FILE: 15-H3

HIGHLAND HIGH SCHOOL
CAFETERIA REHABILITATION AND MODERNIZATION
2900 ROYAL SCOTS WAY
FOR
KERN HIGH SCHOOL DISTRICT
BAKERSFIELD, KERN COUNTY, CALIFORNIA

ARCHITECT S INC.
1601 NEW STINE ROAD, SUITE 280
BAKERSFIELD, CA 93309
PH: (661) 397-4377
FAX: (661) 397-4378
WWW.SCARCHITECT.COM

LICENSED ARCHITECT STEPHEN J. CORBIN No. C-16784 Exp. 06/30/2025 STATE OF CALIFORNIA

STEPHEN J. CORBIN, NCARB, AIA, LEED ®-AP

CHECK AND VERIFY ALL DIMENSIONS BEFORE PROCEEDING WITH THE WORK. REPORT DISCREPANCIES TO THE ARCHITECT. ALL CONSTRUCTION SHALL CONFORM TO THE C.B.C.

ricca design STUDIOS
5613 DTC Parkway | Suite 100
Greenwood Village, CO 80111
303.221.0500
www.ricca.com

Foodservice Elevations

MARK	DATE	REVISIONS
1		
2		
3		

JOB NO. 22075
DRAWN: Ricca
CHECKED: Ricca
DATE: 09/20/2024

QF500-2
12 OF 21 SHEETS

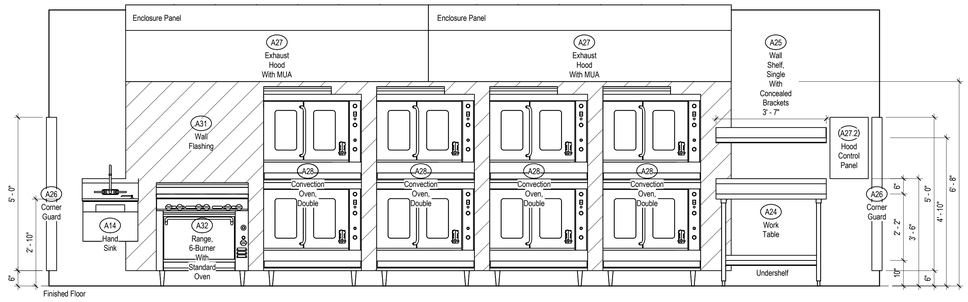

1G Main Cookline
SCALE: 1/2" = 1'-0"

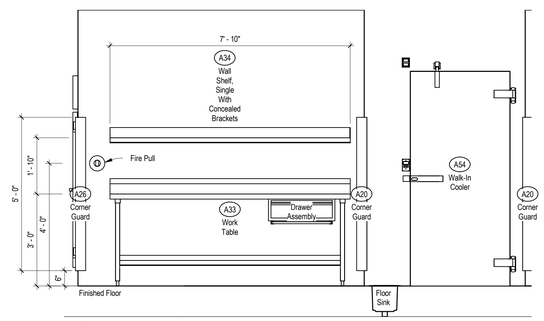

1H Worktable / Walk-In
SCALE: 1/2" = 1'-0"

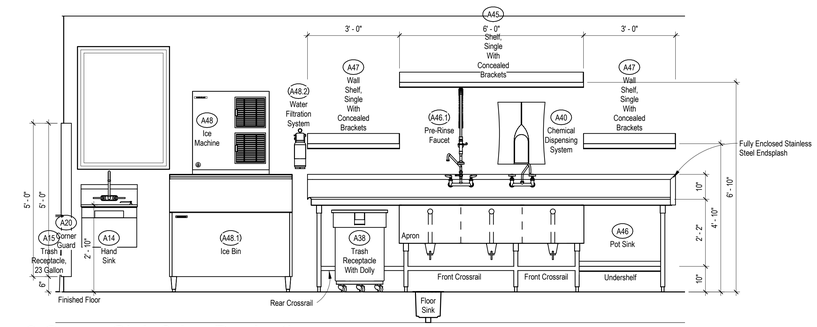

1I 3 Comp. Sink & Ice Production
SCALE: 1/2" = 1'-0"

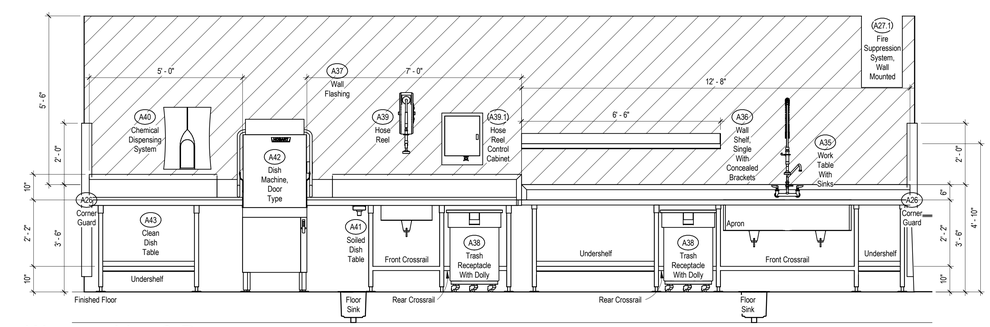

1J Warewashing & Prep
SCALE: 1/2" = 1'-0"

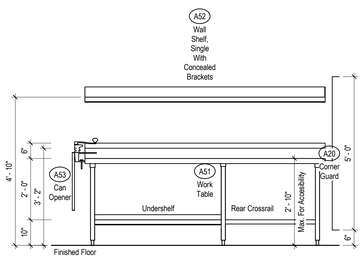

1K Accessible Worktable
SCALE: 1/2" = 1'-0"

IDENTIFICATION STAMP
DIV. OF THE STATE ARCHITECT
APP: 03-122528 INC:
REVIEWED FOR
SS ☑ FLS ☑ ACS ☑
DATE: 01/06/2025

PTN: 63529-385 FILE: 15-H3

HIGHLAND HIGH SCHOOL
CAFETERIA REHABILITATION AND MODERNIZATION
2900 ROYAL SCOTS WAY
FOR
KERN HIGH SCHOOL DISTRICT
BAKERSFIELD, KERN COUNTY, CALIFORNIA

ARCHITECT S INC.
1601 NEW STINE ROAD, SUITE 280
BAKERSFIELD, CA 93309
PH: (661) 397-4377
FAX: (661) 397-4378
WWW.SCARCHITECT.COM
LICENSED ARCHITECT STEPHEN J. CORBIN No. C-16784 Exp. 12/31/25 STATE OF CALIFORNIA
STEPHEN J. CORBIN, NCARB, AIA, LEED ®-AP

CHECK AND VERIFY ALL DIMENSIONS BEFORE PROCEEDING WITH THE WORK. REPORT DISCREPANCIES TO THE ARCHITECT. ALL CONSTRUCTION SHALL CONFORM TO THE C.B.C.

ricca design STUDIOS
5613 DTC Parkway | Suite 100
Greenwood Village, CO 80111
303.221.0500
www.ricca.com

Foodservice Elevations

MARK	DATE	REVISIONS
1		
2		
3		

JOB NO. 22075
DRAWN: Ricca
CHECKED: Ricca
DATE: 09/20/2024

QF500-3
13 OF 21 SHEETS

PULL STATION TO BE RECESS-MOUNTED IN WALL. EC TO PROVIDE EMPTY CONDUIT AND OCTAGON J-BOX WITHIN WALL. PULL STATION LOCATION TO BE DETERMINED BY PREVAILING CODE

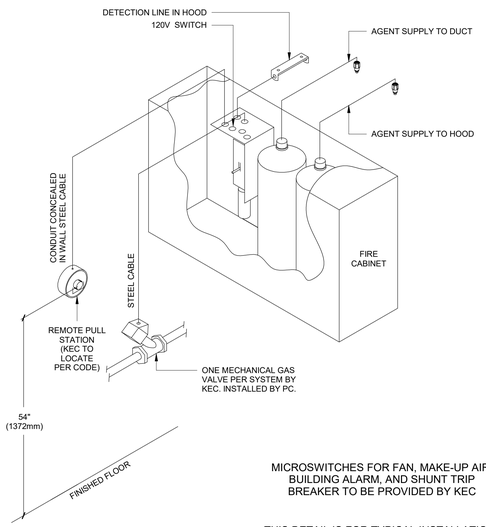

MICROSWITCHES FOR FAN, MAKE-UP AIR, BUILDING ALARM, AND SHUNT TRIP BREAKER TO BE PROVIDED BY KEC

THIS DETAIL IS FOR TYPICAL INSTALLATION. REFER TO MANUFACTURER DRAWINGS FOR PROJECT-SPECIFIC ENGINEERED SYSTEM

FIRE SUPPRESSION SYSTEM

ISOMETRIC VIEW *NOT TO SCALE*

RICCA DESIGN STUDIOS

MEP1-2

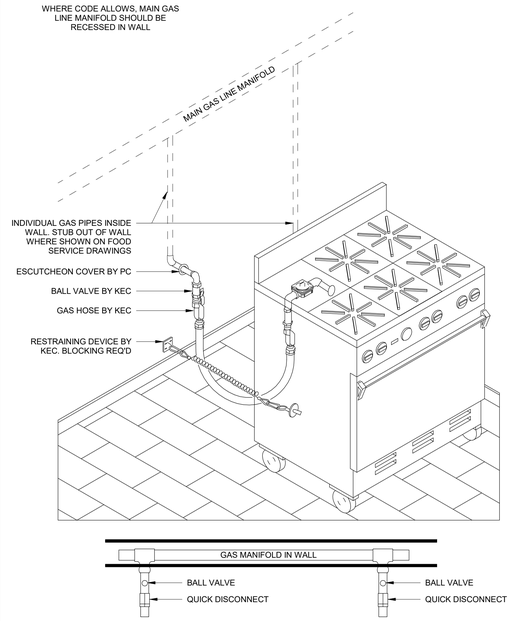

GAS PIPING AND HOSE INSTALLATION

ISOMETRIC VIEW *NOT TO SCALE*

RICCA DESIGN STUDIOS

MEP5-1

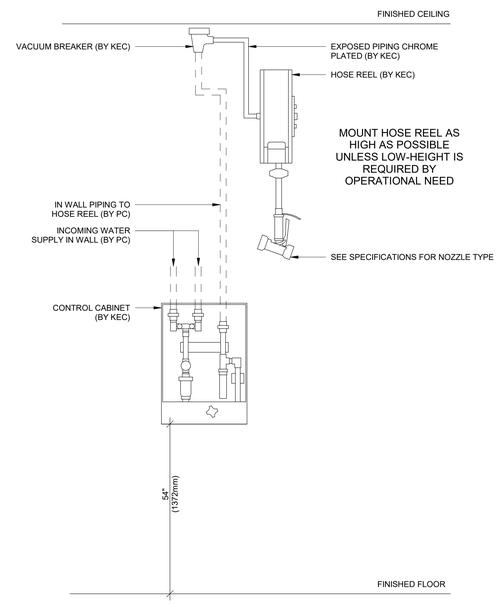

HOSE REEL DETAIL WITH CONTROL CABINET

ELEVATION VIEW *NOT TO SCALE*

RICCA DESIGN STUDIOS

MEP7-1

WALK-IN COOLER/FREEZER NOTES

1. IT IS THE RESPONSIBILTY OF THE ELECTRICAL CONTRACTOR TO INSTALL AND INTER-CONNECT CONDUIT AND WIRING FOR ELECTRICAL COMPONENETS INCLUDING LIGHTS, SWITCHED, THERMOMETERS, DOORS, WINDOWS, PRESSURE RELIEF VENT HEATERS, AND POWER FOR DRAIN LINE HEAT TRACE/TAPE. DOOR FRAME HEATER TO BE WIRED TO AN EASILY ACCESSIBLE JUNCTION BOX ON TOP OF THE WALK-IN FOR FINAL CONNECTION. ELECTRICAL CONTRACTOR SHALL MOUNT AND CONNECT LIGHT FIXTURES PROVIDED BY THE KITCHEN EQUIPMENT CONTRACTOR.
2. ALL INTER-CONNECTING CONDUIT SHALL RUN ABOVE WALK-IN PANLES OR WITHIN WALL PANELS. EXPOSED CONDUIT INSIDE WALK-IN WILL NOT BE ACCEPTABLE EXCEPT FOR THE CONNECTIONS SHOWN AND NOTED IN THE ILLUSTRATION BELOW.
3. CONTRACTORS THAT NEED TO MAKE PENETRATIONS ARE REQUIRED TO SEAL PENETRATIONS TROUGH CEILING, WALL, AND INSIDE ELECTRICAL CONDUIT BOTH THE OUTSIDE AND INSIDE OF THE WALK-IN WITH DOW CORNING #999A SILICONE SEALANT OR EQUAL. PENETRATION PLANS TO BE PROVIDED TO THE KITCHEN EQUIPMENT CONTRACTOR FOR REVIEW AND APPROVAL PRIOR TO THE DRILLING OF PENETRATIONS.
4. FIRE PROTECTION CONTRACTOR TO PROVIDE HOLES FOR SPRINKLER HEAD (IF REQUIRED).
5. KITCHEN EQUIPMENT CONTRACTOR TO PROVIDE ELECTRICIAN WIRING DIAGRAM PRIOR TO WALK-IN INSTALLATION. CONTRACTORS THAT NEED TO MAKE PENETRATIONS MUST SUBMIT PLANS TO THE KITCHEN EQUIPMENT CONTRACTOR FOR APPROVAL PRIOR TO PERFORMING WORK.

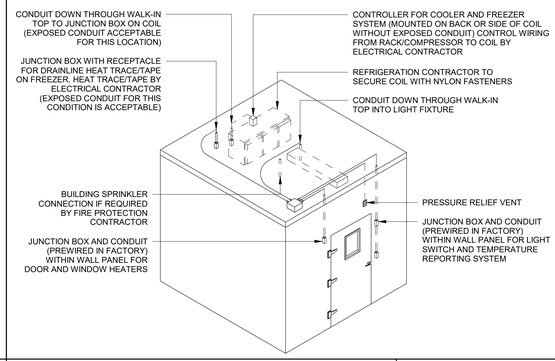

WALK-IN COOLER/FREEZER CONNECTION DETAIL

ISOMETRIC VIEW *NOT TO SCALE*

RICCA DESIGN STUDIOS

MEP9-1

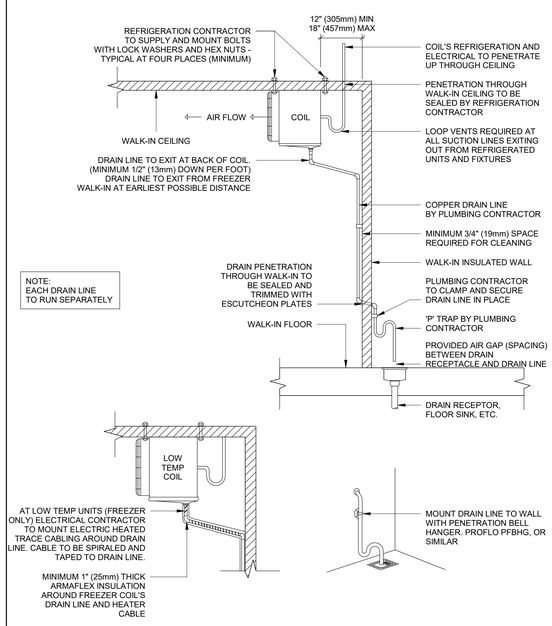

WALK-IN COOLER/FREEZER COIL & CONDENSATE DRAIN LINE DETAIL

SECTION VIEW *NOT TO SCALE*

RICCA DESIGN STUDIOS

MEP9-2

NOT TO SCALE

IDENTIFICATION STAMP
DIV. OF THE STATE ARCHITECT
APP: 03-122528 INC:
REVIEWED FOR
SS ☑ FLS ☑ ACS ☑
DATE: 01/06/2025

PTN: 63529-385 FILE: 15-H3

HIGHLAND HIGH SCHOOL
CAFETERIA REHABILITATION AND MODERNIZATION
2900 ROYAL SCOTS WAY
FOR
KERN HIGH SCHOOL DISTRICT
BAKERSFIELD, KERN COUNTY, CALIFORNIA

ARCHITECT INC.
1601 NEW STINE ROAD, SUITE 280
BAKERSFIELD, CA 93309
PH: (661) 397-4377
FAX: (661) 397-4378
WWW.SCARCHITECT.COM

LICENSED ARCHITECT STEPHEN J. CORBIN No. C-16788 Exp. JUN. 30, 2025 STATE OF CALIFORNIA

STEPHEN J. CORBIN, NCARB, AIA, LEED ®-AP

CHECK AND VERIFY ALL DIMENSIONS BEFORE PROCEEDING WITH THE WORK. REPORT DISCREPANCIES TO THE ARCHITECT. ALL CONSTRUCTION SHALL CONFORM TO THE C.B.C.

ricca design STUDIOS
5613 DTC Parkway | Suite 100
Greenwood Village, CO 80111
303.221.0500
www.ricca.com

Foodservice Details & Sections

MARK	DATE	REVISIONS
1		
2		
3		

JOB NO. 22075
DRAWN: Ricca
CHECKED: Ricca
DATE: 09/20/2024

QF501-1

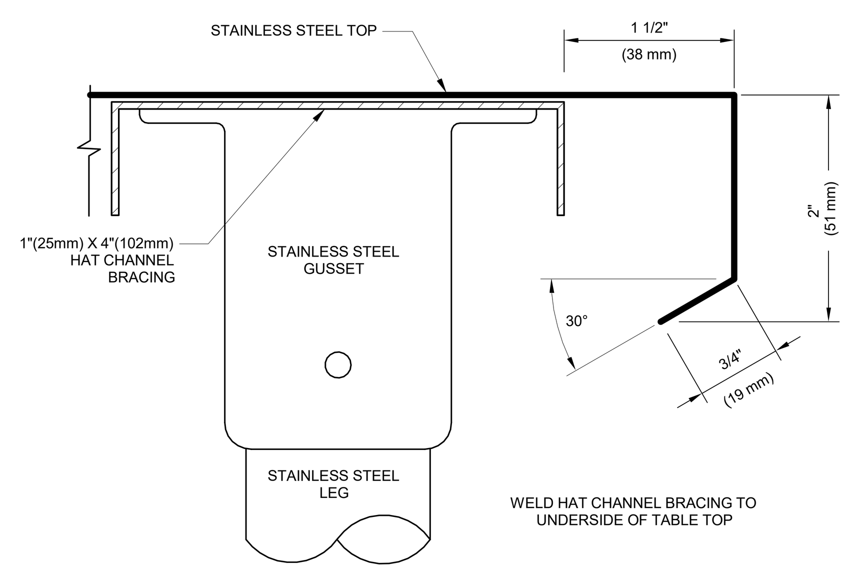

REFER TO WRITTEN SPECIFICATIONS AND FOODSERVICE PLANS FOR FURTHER INFORMATION

NSF FABRICATION SHALL COMPLY WITH NSF STANDARDS

STRAIGHT TURN-DOWN EDGE

RICCA DESIGN STUDIOS

FSD1-1A

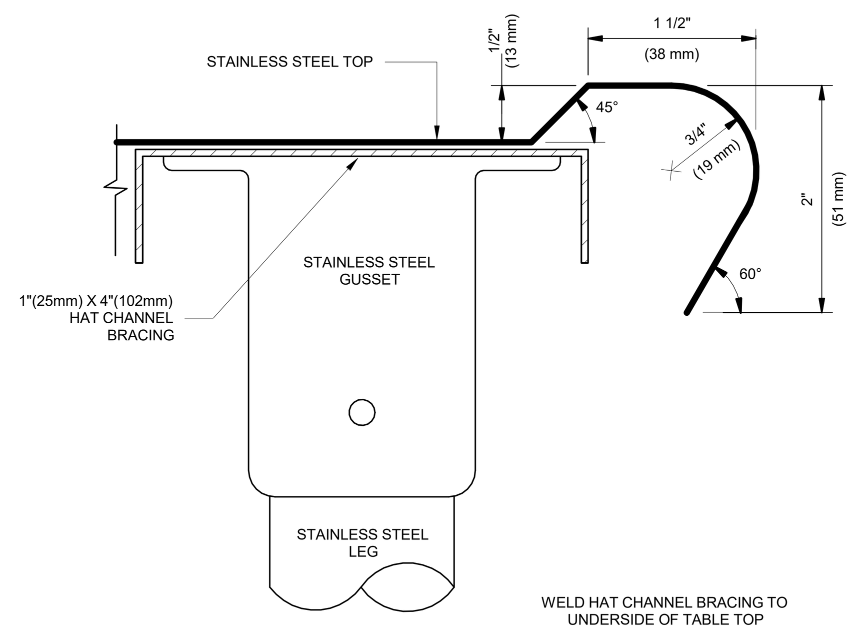

REFER TO WRITTEN SPECIFICATIONS AND FOODSERVICE PLANS FOR FURTHER INFORMATION

NSF FABRICATION SHALL COMPLY WITH NSF STANDARDS

MARINE BULLNOSE EDGE

RICCA DESIGN STUDIOS

FSD1-2B

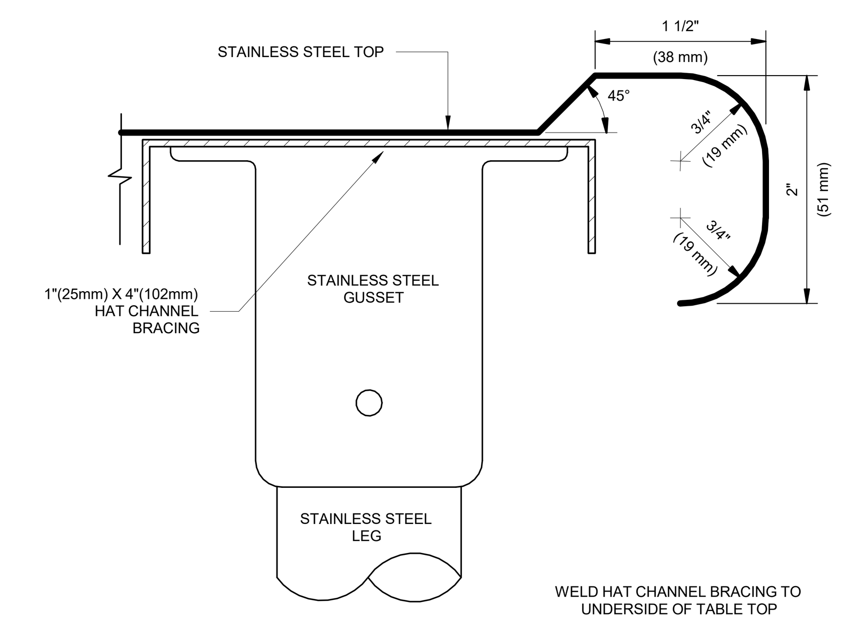

REFER TO WRITTEN SPECIFICATIONS AND FOODSERVICE PLANS FOR FURTHER INFORMATION

NSF FABRICATION SHALL COMPLY WITH NSF STANDARDS

MARINE ROLLED FLAT EDGE

RICCA DESIGN STUDIOS

FSD1-2C

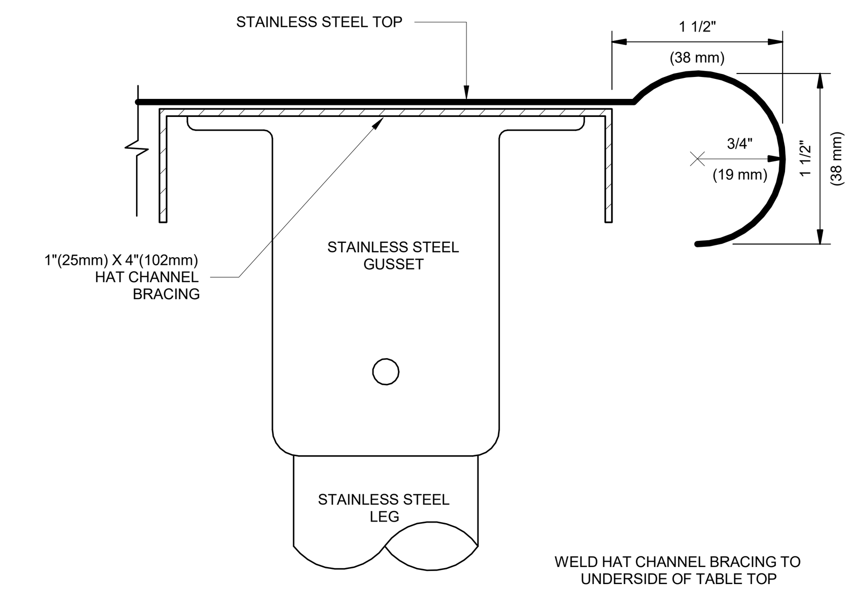

REFER TO WRITTEN SPECIFICATIONS AND FOODSERVICE PLANS FOR FURTHER INFORMATION

NSF FABRICATION SHALL COMPLY WITH NSF STANDARDS

MARINE ROLLED EDGE

RICCA DESIGN STUDIOS

FSD1-2D

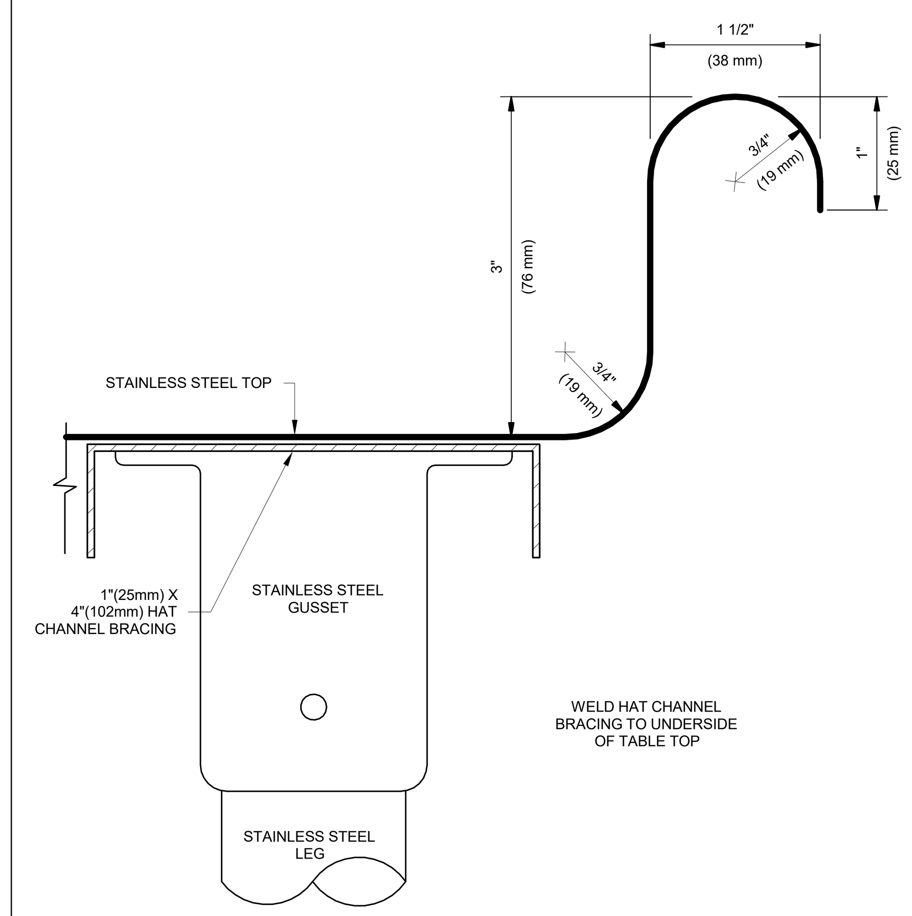

REFER TO WRITTEN SPECIFICATIONS AND FOODSERVICE PLANS FOR FURTHER INFORMATION

NSF FABRICATION SHALL COMPLY WITH NSF STANDARDS

RAISED ROLLED EDGE

RICCA DESIGN STUDIOS

FSD1-4B

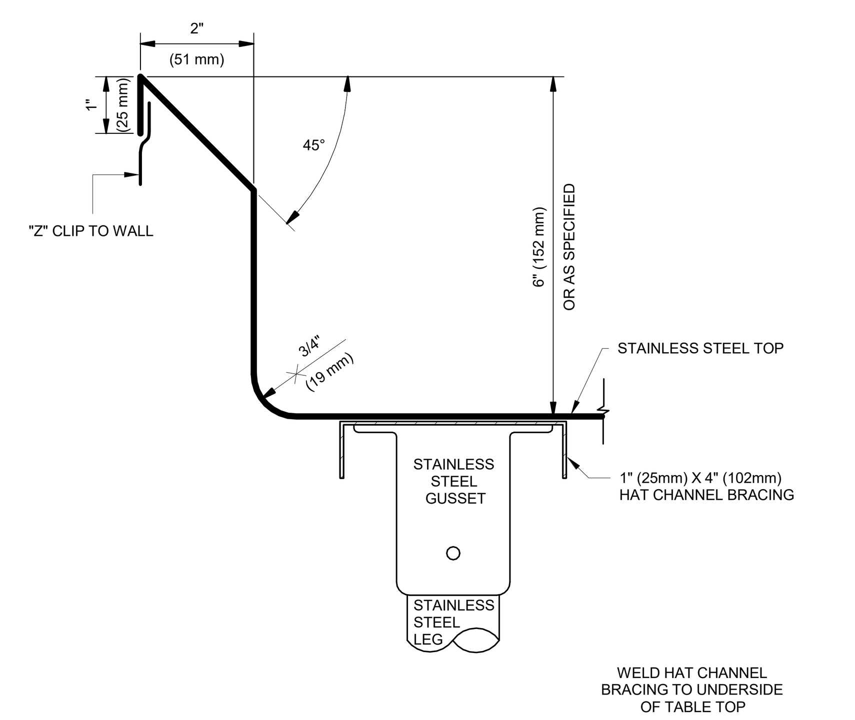

REFER TO WRITTEN SPECIFICATIONS AND FOODSERVICE PLANS FOR FURTHER INFORMATION

NSF FABRICATION SHALL COMPLY WITH NSF STANDARDS

STANDARD SPLASH

RICCA DESIGN STUDIOS

FSD1-5A

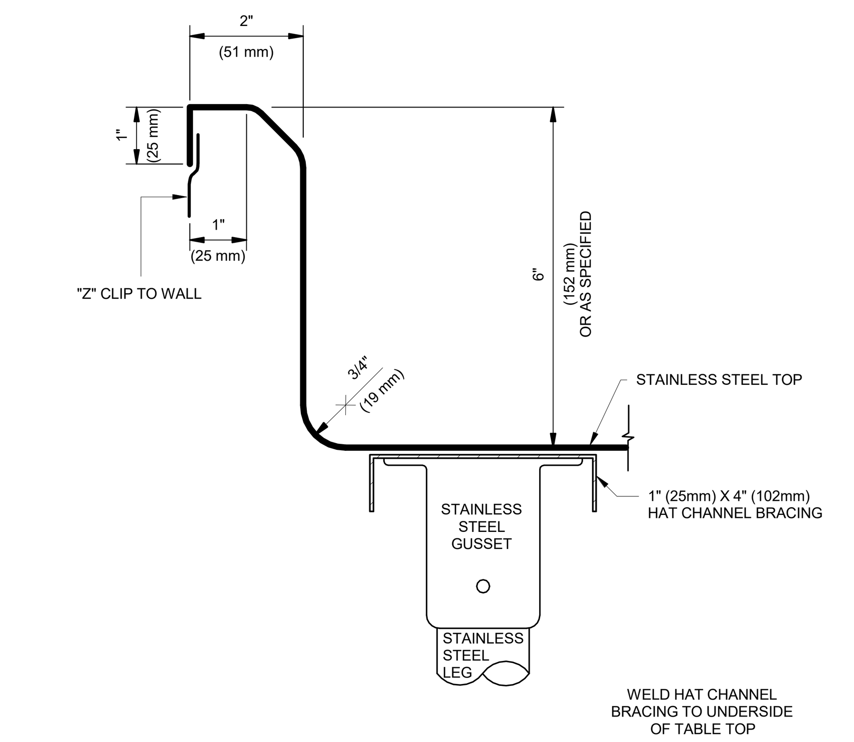

REFER TO WRITTEN SPECIFICATIONS AND FOODSERVICE PLANS FOR FURTHER INFORMATION

NSF FABRICATION SHALL COMPLY WITH NSF STANDARDS

COMBINATION BACK SPLASH

RICCA DESIGN STUDIOS

FSD1-5C

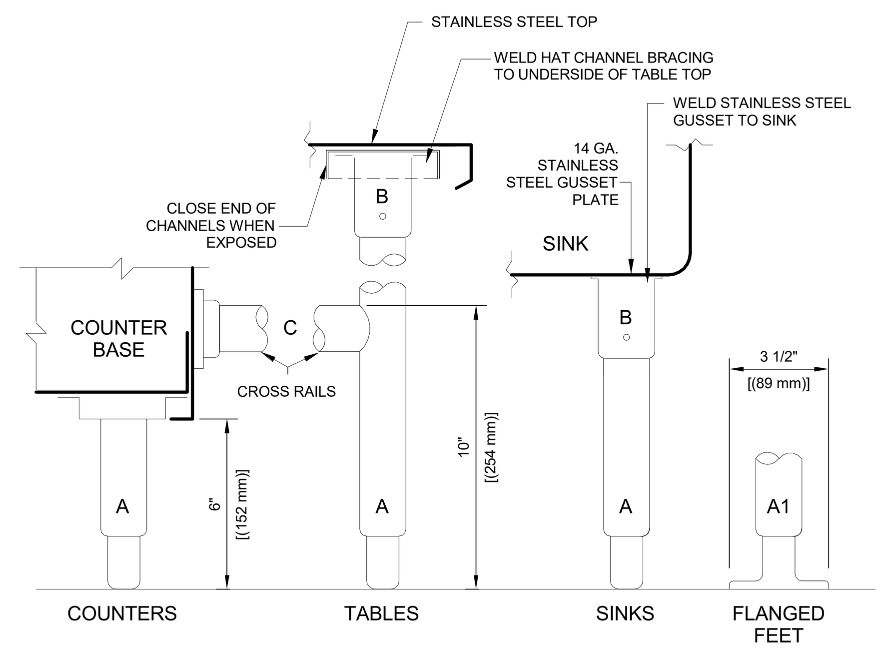

A LEGS TO BE 1-5/8" O.D. 16 GA STAINLESS STEEL ASSEMBLY WITH THREADED STAINLESS STEEL BULLET FEET WITH 2" (51mm) MINIMUM ADJUSTMENT

A1 WHERE SPECIFIED, LEGS TO BE 1 5/8" O.D. 16 GA. STAINLESS STEEL ASSEMBLY WITH THREADED STAINLESS STEEL ADJUSTABLE FLANGED FEET. ANCHOR TO FLOOR WITH STAINLESS STEEL FASTENERS. USE EPOXY GLUE WHERE FLOOR PENETRATIONS ARE PROHIBITED

B GUSSETS TO BE STAINLESS STEEL WITH SET SCREWS FOR SECURING LEGS. FULLY-WELD GUSSETS TO CHANNELS OR GUSSET PLATES

C CROSS-RAILS TO BE 1 5/8" O.D. 16 GA. STAINLESS STEEL TUBING FULLY WELDED TO LEGS. WHERE CROSS-RAILS JOIN CABINET BODY, PROVIDE FLANGE SECURED WITH STAINLESS STEEL SCREWS

REFER TO WRITTEN SPECIFICATIONS AND FOODSERVICE PLANS FOR FURTHER INFORMATION

NSF FABRICATION SHALL COMPLY WITH NSF STANDARDS

LEGS AND CROSSBRACING

RICCA DESIGN STUDIOS

FSD1-7

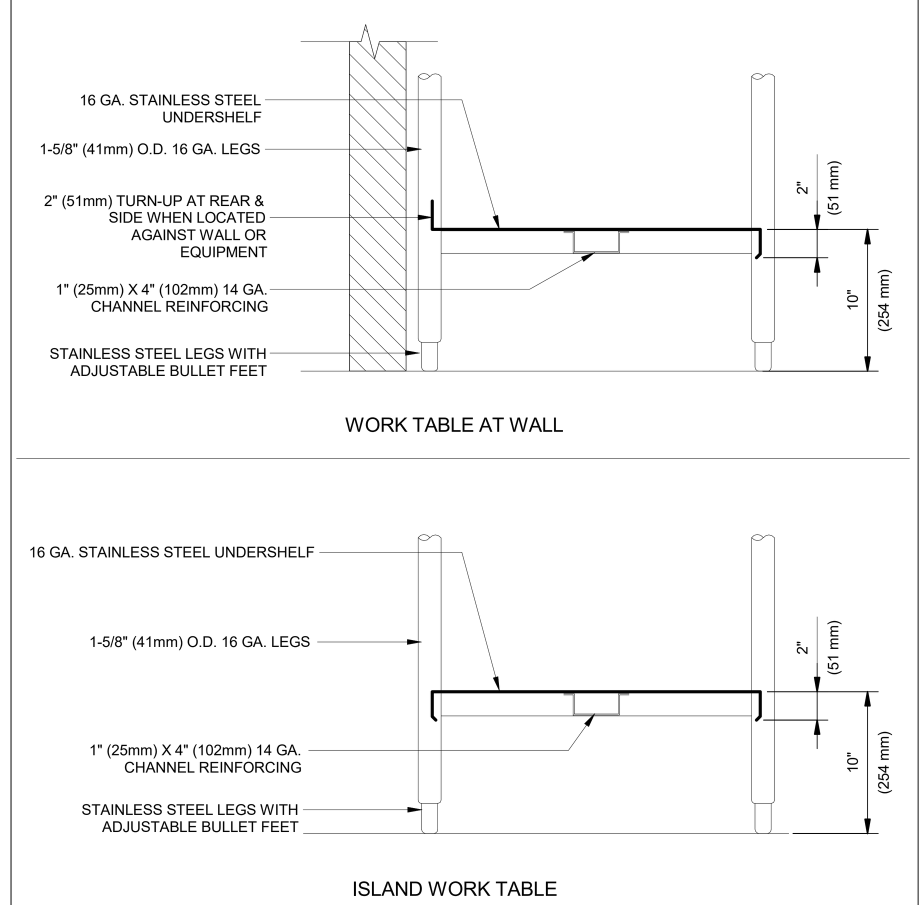

REFER TO WRITTEN SPECIFICATIONS AND FOODSERVICE PLANS FOR FURTHER INFORMATION

NSF FABRICATION SHALL COMPLY WITH NSF STANDARDS

UNDERSHELF

RICCA DESIGN STUDIOS

FSD1-8

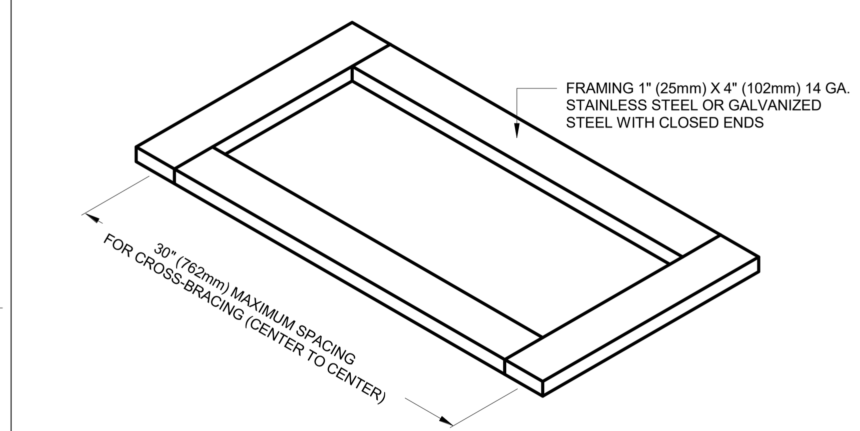

AT STAINLESS STEEL TOP, WELD STUDS TO UNDERSIDE OF TOP AND SECURE TO FRAMING WITH LOCK WASHERS AND CAP NUTS

AT WOOD TOP, SECURE CHANNEL FRAMING TO TOP WITH OVAL HEAD STAINLESS STEEL SCREWS

PROVIDE WITH NSF APPROVED COMPONENT HARDWARE Q75-1366 LATEX SOUND DEADENING

REFER TO WRITTEN SPECIFICATIONS AND FOODSERVICE PLANS FOR FURTHER INFORMATION

NSF FABRICATION SHALL COMPLY WITH NSF STANDARDS

WORK TABLE TOP UNDERBRACING

RICCA DESIGN STUDIOS

FSD1-10

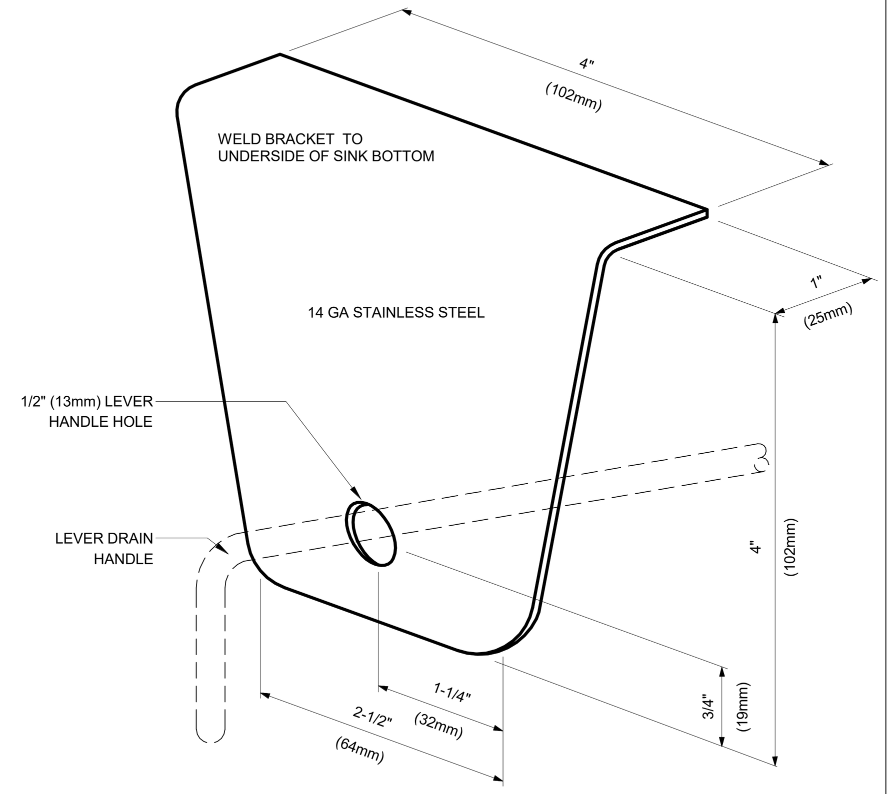

REFER TO WRITTEN SPECIFICATIONS AND FOODSERVICE PLANS FOR FURTHER INFORMATION

NSF FABRICATION SHALL COMPLY WITH NSF STANDARDS

ROTARY WASTE HANDLE SUPPORT

RICCA DESIGN STUDIOS

FSD1-13

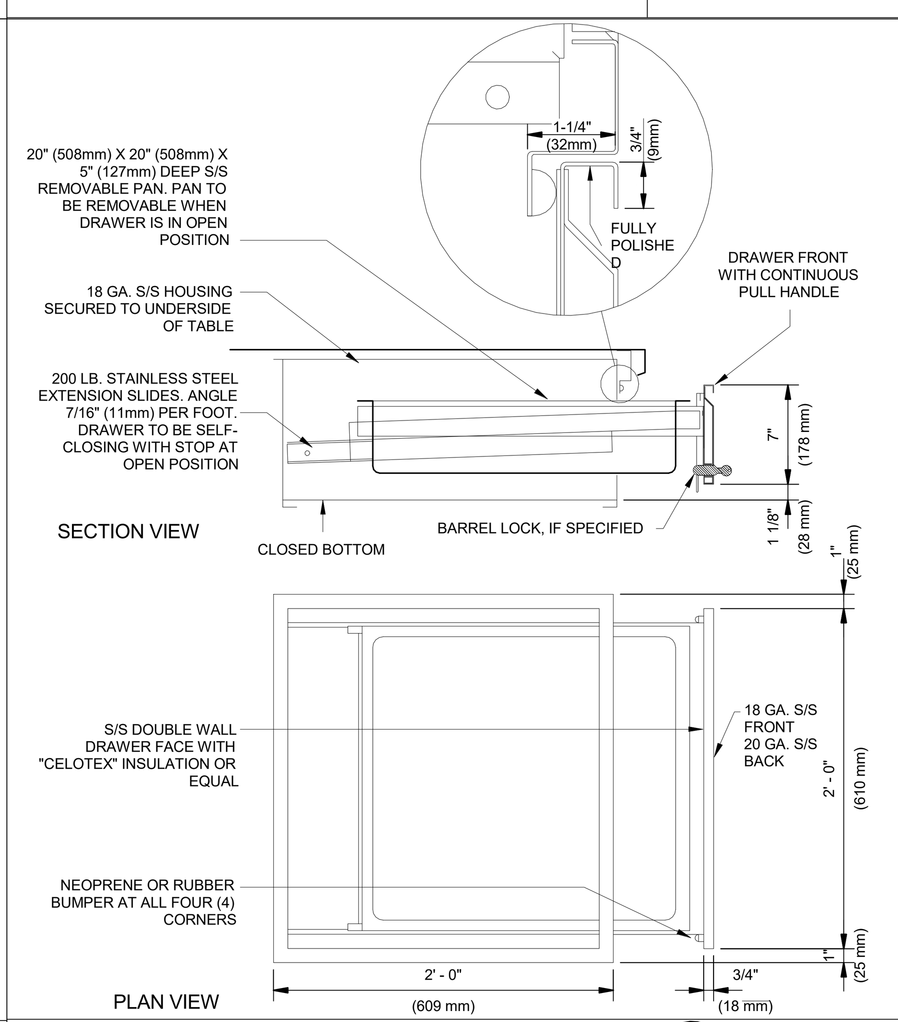

REFER TO WRITTEN SPECIFICATIONS AND FOODSERVICE PLANS FOR FURTHER INFORMATION

NSF FABRICATION SHALL COMPLY WITH NSF STANDARDS

DRAWER ASSEMBLY

RICCA DESIGN STUDIOS

FSD1-15

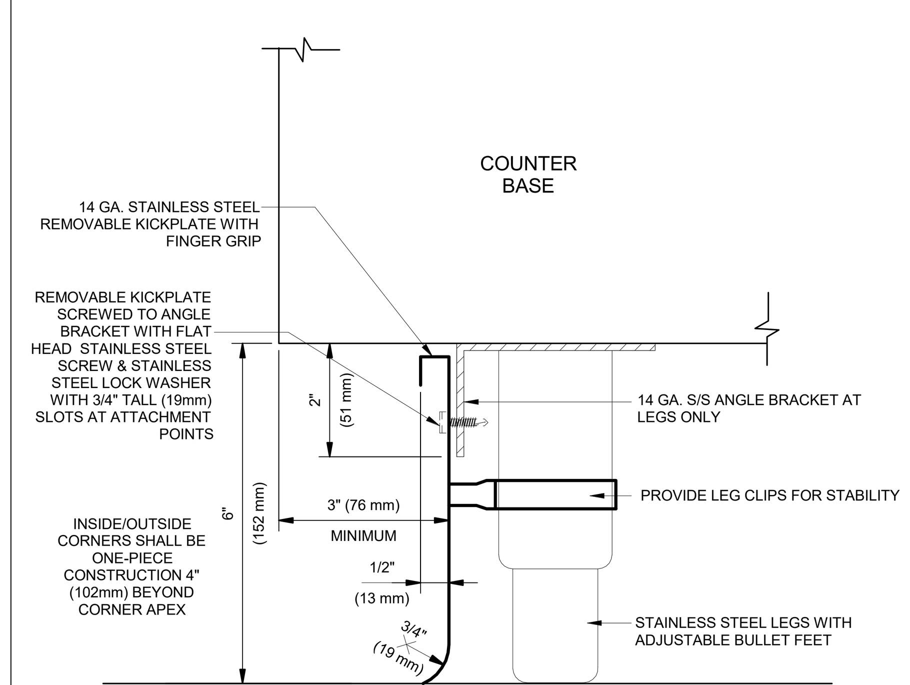

REFER TO WRITTEN SPECIFICATIONS AND FOODSERVICE PLANS FOR FURTHER INFORMATION

NSF FABRICATION SHALL COMPLY WITH NSF STANDARDS

REMOVABLE KICK PLATE DETAIL

RICCA DESIGN STUDIOS

FSD1-23

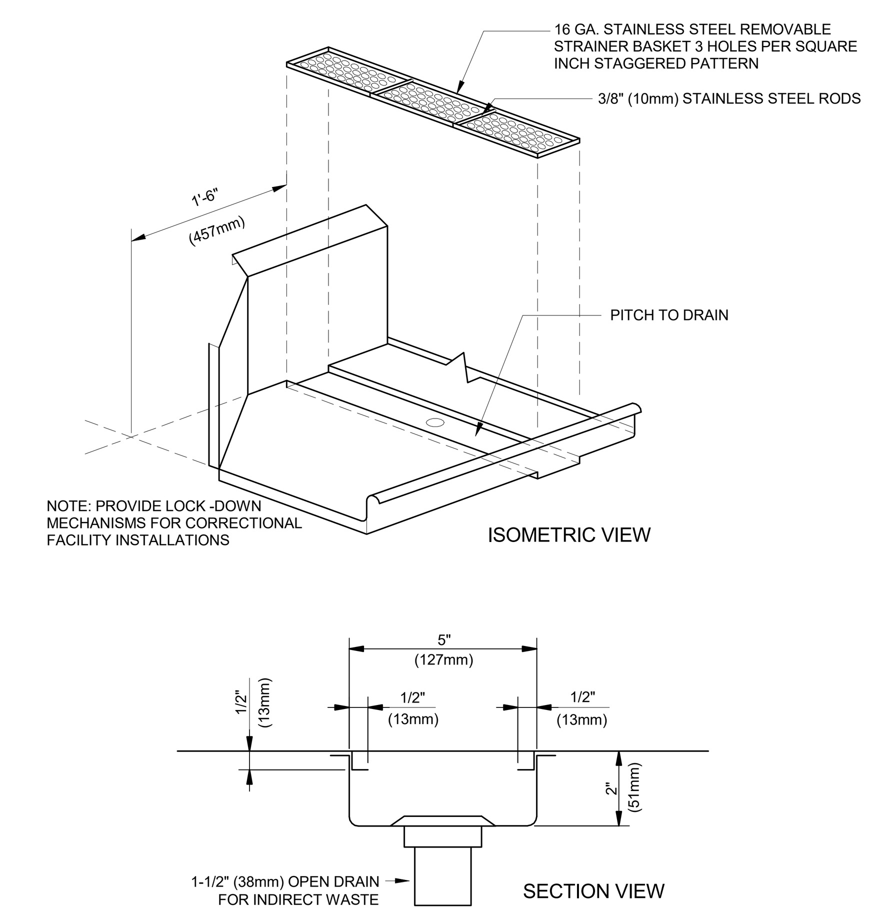

REFER TO WRITTEN SPECIFICATIONS AND FOODSERVICE PLANS FOR FURTHER INFORMATION

NSF FABRICATION SHALL COMPLY WITH NSF STANDARDS

QUICK DRAIN

RICCA DESIGN STUDIOS

FSD1-34

NOT TO SCALE

IDENTIFICATION STAMP
DIV. OF THE STATE ARCHITECT
APP: 03-122528 INC:
REVIEWED FOR
SS ☑ FLS ☑ ACS ☑
DATE: 01/06/2025

PTN: 63529-385 FILE: 15-H3

HIGHLAND HIGH SCHOOL

CAFETERIA REHABILITATION AND MODERNIZATION
2900 ROYAL SCOTS WAY
FOR
KERN HIGH SCHOOL DISTRICT
BAKERSFIELD, KERN COUNTY, CALIFORNIA

SC ARCHITECT INC.
1601 NEW STINE ROAD, SUITE 280
BAKERSFIELD, CA 93309
PH: (661) 397-4377
FAX: (661) 397-4378
WWW.SCARCHITECT.COM

STEPHEN J. CORBIN, NCARB, AIA, LEED AP

CHECK AND VERIFY ALL DIMENSIONS BEFORE PROCEEDING WITH THE WORK. REPORT DISCREPANCIES TO THE ARCHITECT. ALL CONSTRUCTION SHALL CONFORM TO THE C.B.C.

ricca design STUDIOS
5613 DTC Parkway | Suite 100
Greenwood Village, CO 80111
303.221.0500
www.ricca.com

Foodservice Details & Sections

MARK	DATE	REVISIONS
1		
2		
3		

JOB NO. 22075

DRAWN: Ricca

CHECKED: Ricca

DATE: 09/20/2024

QF501-2

15 OF 21 SHEETS

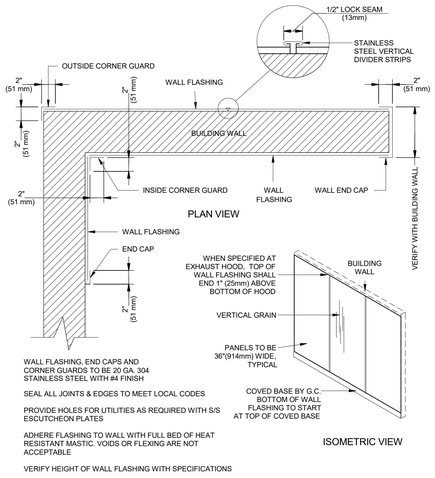

REFER TO WRITTEN SPECIFICATIONS AND FOODSERVICE PLANS FOR FURTHER INFORMATION

NSF FABRICATION SHALL COMPLY WITH NSF STANDARDS

WALL FLASHING

RICCA DESIGN STUDIOS

FSD1-39

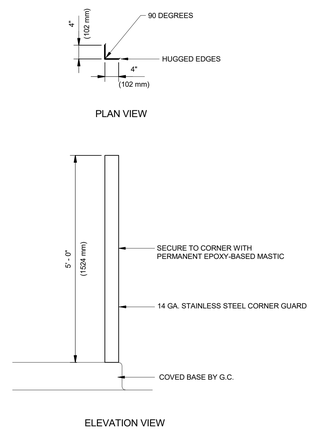

REFER TO WRITTEN SPECIFICATIONS AND FOODSERVICE PLANS FOR FURTHER INFORMATION

NSF FABRICATION SHALL COMPLY WITH NSF STANDARDS

CORNER GUARD

RICCA DESIGN STUDIOS

FSD1-40

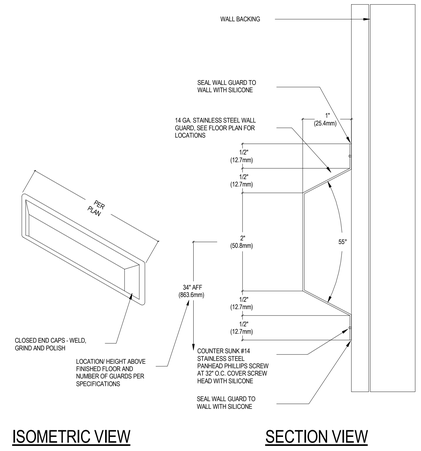

REFER TO WRITTEN SPECIFICATIONS AND FOODSERVICE PLANS FOR FURTHER INFORMATION

NSF FABRICATION SHALL COMPLY WITH NSF STANDARDS

STAINLESS STEEL WALL GUARD

RICCA DESIGN STUDIOS

NOT TO SCALE

FSD1-59

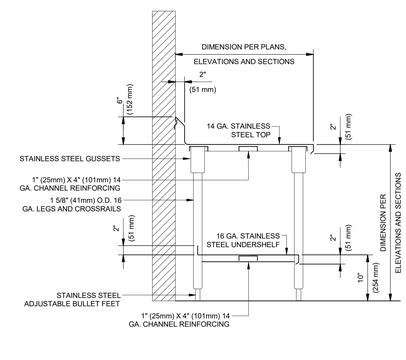

REFER TO WRITTEN SPECIFICATIONS AND FOODSERVICE PLANS FOR FURTHER INFORMATION

NSF FABRICATION SHALL COMPLY WITH NSF STANDARDS

WORK TABLE WITH UNDERSHELF

RICCA DESIGN STUDIOS

FSD2-5

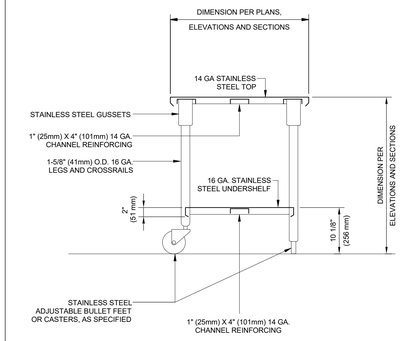

REFER TO WRITTEN SPECIFICATIONS AND FOODSERVICE PLANS FOR FURTHER INFORMATION

NSF FABRICATION SHALL COMPLY WITH NSF STANDARDS

ISLAND WORK TABLE WITH UNDERSHELF

RICCA DESIGN STUDIOS

FSD2-6

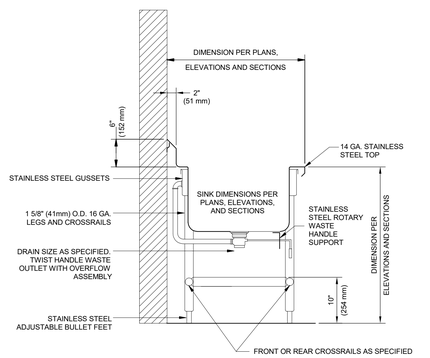

REFER TO WRITTEN SPECIFICATIONS AND FOODSERVICE PLANS FOR FURTHER INFORMATION

NSF FABRICATION SHALL COMPLY WITH NSF STANDARDS

WORK TABLE WITH SINK AND OPEN BASE

RICCA DESIGN STUDIOS

FSD2-7

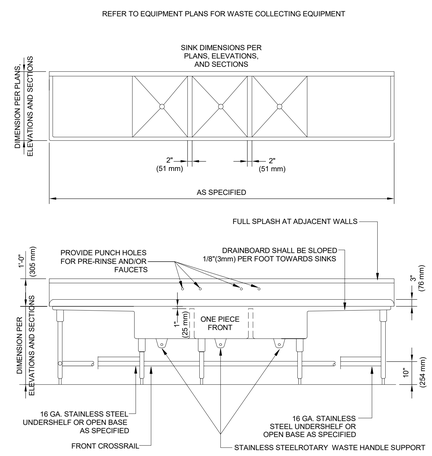

REFER TO WRITTEN SPECIFICATIONS AND FOODSERVICE PLANS FOR FURTHER INFORMATION

NSF FABRICATION SHALL COMPLY WITH NSF STANDARDS

POT SINK

RICCA DESIGN STUDIOS

FSD3-1

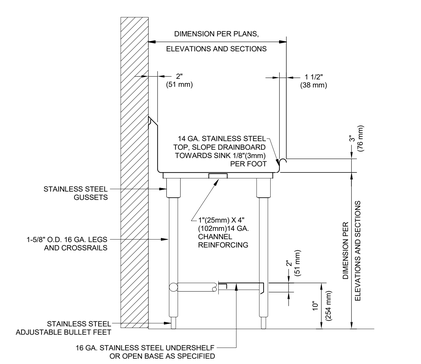

REFER TO WRITTEN SPECIFICATIONS AND FOODSERVICE PLANS FOR FURTHER INFORMATION

NSF FABRICATION SHALL COMPLY WITH NSF STANDARDS

POT SINK DRAINBOARD

RICCA DESIGN STUDIOS

FSD3-3

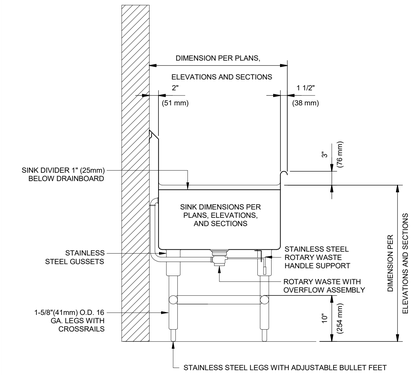

REFER TO WRITTEN SPECIFICATIONS AND FOODSERVICE PLANS FOR FURTHER INFORMATION

NSF FABRICATION SHALL COMPLY WITH NSF STANDARDS

POT SINK COMPARTMENT

RICCA DESIGN STUDIOS

FSD3-4

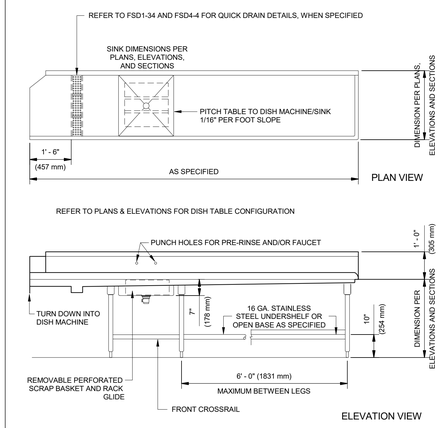

REFER TO WRITTEN SPECIFICATIONS AND FOODSERVICE PLANS FOR FURTHER INFORMATION

NSF FABRICATION SHALL COMPLY WITH NSF STANDARDS

SOILED DISHTABLE

RICCA DESIGN STUDIOS

FSD4-1

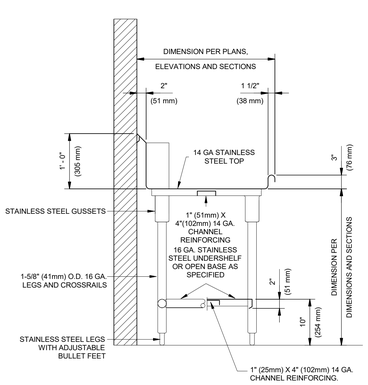

REFER TO WRITTEN SPECIFICATIONS AND FOODSERVICE PLANS FOR FURTHER INFORMATION

NSF FABRICATION SHALL COMPLY WITH NSF STANDARDS

DISHTABLE DRAINBOARD

RICCA DESIGN STUDIOS

FSD4-2

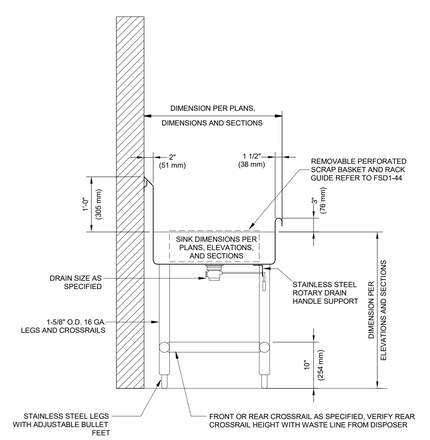

REFER TO WRITTEN SPECIFICATIONS AND FOODSERVICE PLANS FOR FURTHER INFORMATION

NSF FABRICATION SHALL COMPLY WITH NSF STANDARDS

SOILED DISHTABLE SINK COMPARTMENT

RICCA DESIGN STUDIOS

FSD4-3

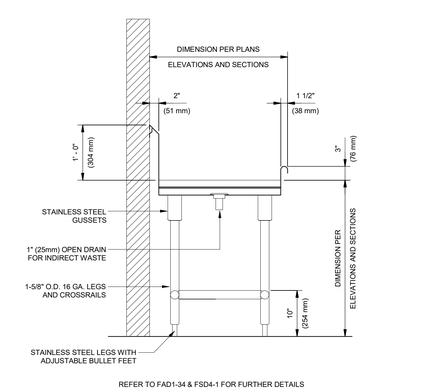

REFER TO WRITTEN SPECIFICATIONS AND FOODSERVICE PLANS FOR FURTHER INFORMATION

NSF FABRICATION SHALL COMPLY WITH NSF STANDARDS

SOILED DISHTABLE QUICK DRAIN

RICCA DESIGN STUDIOS

FSD4-4

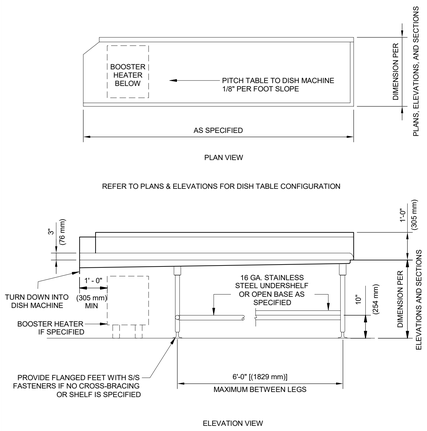

REFER TO WRITTEN SPECIFICATIONS AND FOODSERVICE PLANS FOR FURTHER INFORMATION

NSF FABRICATION SHALL COMPLY WITH NSF STANDARDS

CLEAN DISHTABLE

RICCA DESIGN STUDIOS

FSD4-9

NOT TO SCALE

IDENTIFICATION STAMP
DIV. OF THE STATE ARCHITECT
APP: 03-122528 INC:
REVIEWED FOR
SS ☑ FLS ☑ ACS ☑
DATE: 01/06/2025

PTN: 63529-385 FILE: 15-H3

HIGHLAND HIGH SCHOOL

CAFETERIA REHABILITATION AND MODERNIZATION

2900 ROYAL SCOTS WAY
FOR
KERN HIGH SCHOOL DISTRICT
BAKERSFIELD, KERN COUNTY, CALIFORNIA

ARCHITECT SCR inc.
1601 NEW STINE ROAD, SUITE 280
BAKERSFIELD, CA 93309
PH: (661) 397-4377
FAX: (661) 397-4378
WWW.SCARCHITECT.COM

LICENSED ARCHITECT STEPHEN J. CORBIN No. C-16784 EXP. 12/02/24 STATE OF CALIFORNIA

STEPHEN J. CORBIN, NCARB, AIA, LEED ®AP

CHECK AND VERIFY ALL DIMENSIONS BEFORE PROCEEDING WITH THE WORK. REPORT DISCREPANCIES TO THE ARCHITECT. ALL CONSTRUCTION SHALL CONFORM TO THE C.B.C.

ricca design STUDIOS
5613 DTC Parkway | Suite 100
Greenwood Village, CO 80111
303.221.0500
www.ricca.com

Foodservice Details & Sections

MARK	DATE	REVISIONS
1		
2		
3		

JOB NO. 22075
DRAWN: Ricca
CHECKED: Ricca
DATE: 09/20/2024

QF501-3

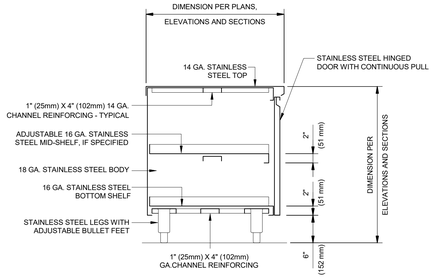

REFER TO WRITTEN SPECIFICATIONS AND FOODSERVICE PLANS FOR FURTHER INFORMATION

NSF FABRICATION SHALL COMPLY WITH NSF STANDARDS

ISLAND WORK COUNTER

RICCA DESIGN STUDIOS

FSD5-12

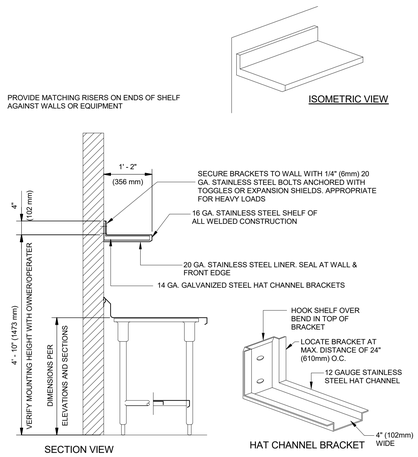

REFER TO WRITTEN SPECIFICATIONS AND FOODSERVICE PLANS FOR FURTHER INFORMATION

NSF FABRICATION SHALL COMPLY WITH NSF STANDARDS

SINGLE WALL SHELF WITH CONCEALED BRACKETS

RICCA DESIGN STUDIOS

FSD12-7

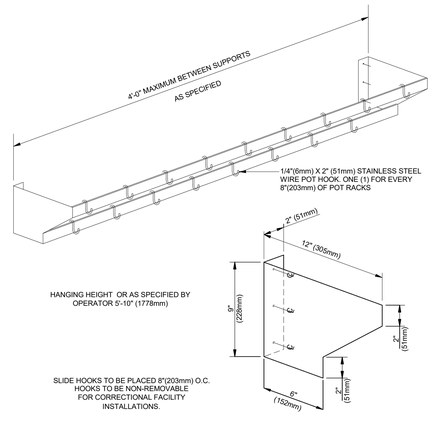

REFER TO WRITTEN SPECIFICATIONS AND FOODSERVICE PLANS FOR FURTHER INFORMATION

NSF FABRICATION SHALL COMPLY WITH NSF STANDARDS

WALL MOUNTED UTENSIL RACK

RICCA DESIGN STUDIOS

FSD14-7

NOT TO SCALE

IDENTIFICATION STAMP
DIV. OF THE STATE ARCHITECT
APP: 03-122528 INC:
REVIEWED FOR
SS ☑ FLS ☑ ACS ☑
DATE: 01/06/2025

PTN: 63529-385 FILE: 15-H3

HIGHLAND HIGH SCHOOL

CAFETERIA REHABILITATION AND MODERNIZATION
2900 ROYAL SCOTS WAY
FOR
KERN HIGH SCHOOL DISTRICT
BAKERSFIELD, KERN COUNTY, CALIFORNIA

1601 NEW STINE ROAD, SUITE 280
BAKERSFIELD, CA 93309
PH: (661) 397-4377
FAX: (661) 397-4378
WWW.SCARCHITECT.COM

STEPHEN J. CORBIN, NCARB, AIA, LEED ®-AP

CHECK AND VERIFY ALL DIMENSIONS BEFORE PROCEEDING WITH THE WORK. REPORT DISCREPANCIES TO THE ARCHITECT. ALL CONSTRUCTION SHALL CONFORM TO THE C.B.C.

ricca design STUDIOS
5613 DTC Parkway | Suite 100
Greenwood Village, CO 80111
303.221.0500
www.ricca.com

Foodservice Details & Sections

MARK	DATE	REVISIONS
1		
2		
3		

JOB NO. 22075
DRAWN: Ricca
CHECKED: Ricca
DATE: 09/20/2024

QF501-4

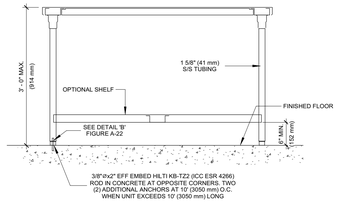

FIGURE A-1 FREE STANDING TABLE

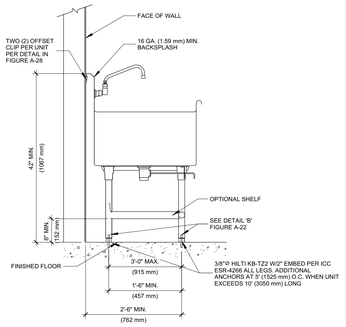

NOTE:
THE DETAILS SHOWN OF JOINTS AND SEAMS ARE GRAPHIC REPRESENTATIONS ONLY AND ARE NOT INTENDED TO INDICATE SPACING BETWEEN THE METAL ELEMENTS

FIGURE A-2 WALL ATTACHED SINK WORKTABLE WITH WALL CAP

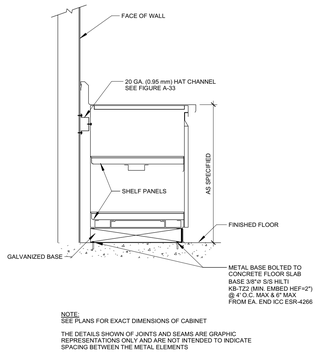

NOTE:
SEE PLANS FOR EXACT DIMENSIONS OF CABINET

THE DETAILS SHOWN OF JOINTS AND SEAMS ARE GRAPHIC REPRESENTATIONS ONLY AND ARE NOT INTENDED TO INDICATE SPACING BETWEEN THE METAL ELEMENTS

FIGURE A-4 ENCLOSED CABINET

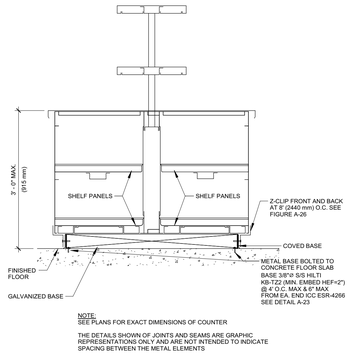

NOTE:
SEE PLANS FOR EXACT DIMENSIONS OF COUNTER

THE DETAILS SHOWN OF JOINTS AND SEAMS ARE GRAPHIC REPRESENTATIONS ONLY AND ARE NOT INTENDED TO INDICATE SPACING BETWEEN THE METAL ELEMENTS

FIGURE A-5 ISLAND COUNTER

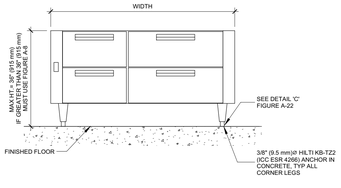

NOTE:
1. THE LEAST PLAN DIMENSION MUST BE GREATER THAN OR EQUAL TO 6/10 HEIGHT OR USE FIGURE A-8
2. APPLIANCES WITHIN COUNTER MUST BE ATTACHED TO COUNTER IF THE COUNTER IS ATTACHED TO THE FLOOR WITHIN 24" (610 mm) OF APPLIANCE ON EACH SIDE

FIGURE A-7 FLOOR MOUNTED APPLIANCE

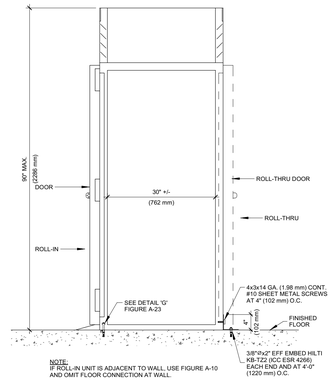

NOTE:
IF ROLL-IN UNIT IS ADJACENT TO WALL, USE FIGURE A-10 AND OMIT FLOOR CONNECTION AT WALL.

FIGURE A-9 ROLL-IN STORAGE UNIT

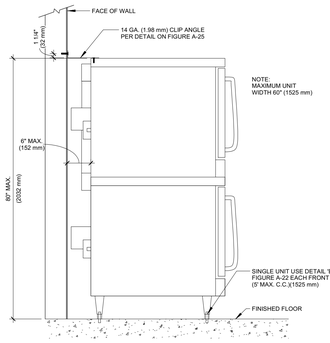

FIGURE A-11 FLOOR MOUNTED APPLIANCE AGAINST WALL

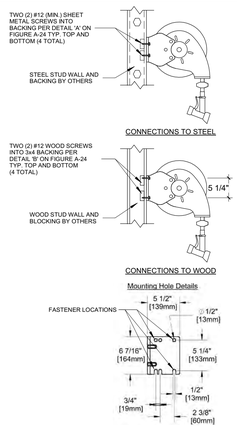

FIGURE A-16 HOSE REELS

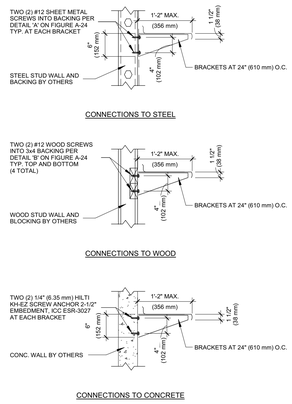

FIGURE A-17 WALL MOUNTED SHELVES

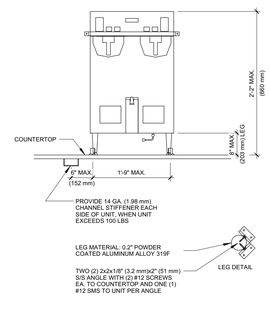

FIGURE A-18 COUNTERTOP EQUIPMENT

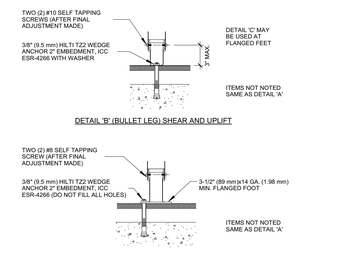

FIGURE A-22 FOOT DETAILS

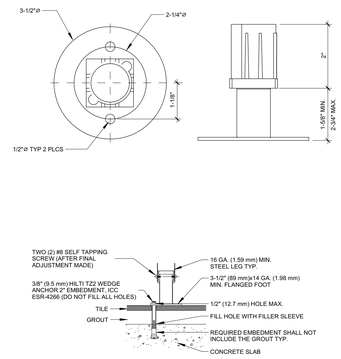

FIGURE A-22.1 FLANGED FOOT DETAIL

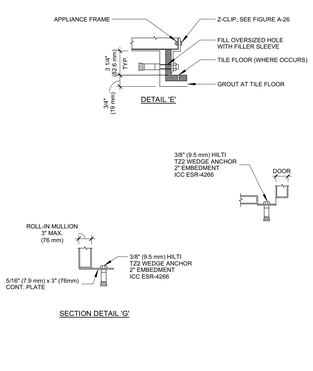

FIGURE A-23 BASE ATTACHMENTS

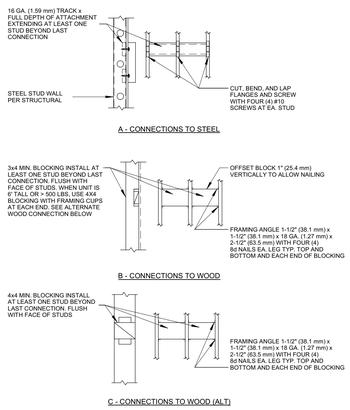

FIGURE A-24 WALL SUPPORT BACKING

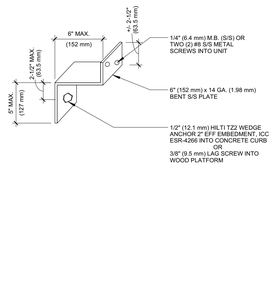

FIGURE A-26 Z-CLIP DETAIL

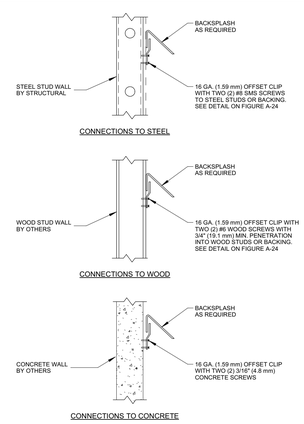

FIGURE A-28 OFFSET CLIPS

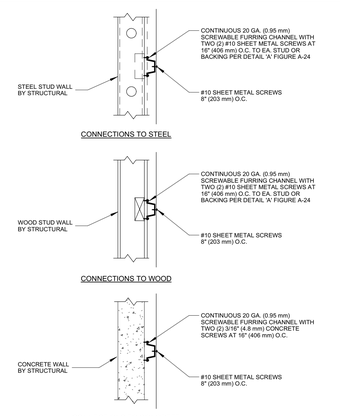

FIGURE A-33 FURRING CHANNEL CONNECTIONS

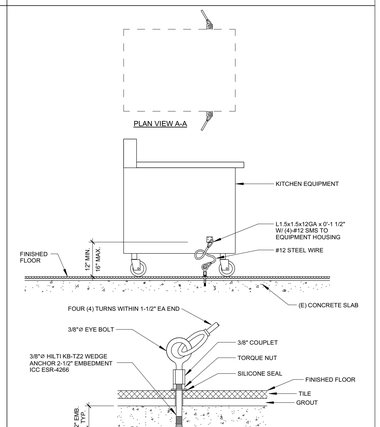

FIGURE A-34 ANCHORAGE FOR MOBILE EQUIPMENT

NOT TO SCALE

IDENTIFICATION STAMP
DIV. OF THE STATE ARCHITECT
APP: 03-122528 INC:
REVIEWED FOR
SS ☑ FLS ☑ ACS ☑
DATE: 01/06/2025

PTN: 63529-385 FILE: 15-H3

HIGHLAND HIGH SCHOOL
CAFETERIA REHABILITATION AND MODERNIZATION
2900 ROYAL SCOTS WAY
FOR
KERN HIGH SCHOOL DISTRICT
BAKERSFIELD, KERN COUNTY, CALIFORNIA

ARCHITECT INC.
1601 NEW STINE ROAD, SUITE 280
BAKERSFIELD, CA 93309
PH: (661) 397-4377
FAX: (661) 397-4378
WWW.SCARCHITECT.COM
LICENSED ARCHITECT
STEPHEN J. CORBIN
No. C-16762
BAKERSFIELD, CALIFORNIA
STEPHEN J. CORBIN, NCARB, AIA, LEED ®-AP

CHECK AND VERIFY ALL DIMENSIONS BEFORE PROCEEDING WITH THE WORK. REPORT DISCREPANCIES TO THE ARCHITECT. ALL CONSTRUCTION SHALL CONFORM TO THE C.B.C.

ricca design STUDIOS
5613 DTC Parkway | Suite 100
Greenwood Village, CO 80111
303.221.0500
www.ricca.com

Foodservice Details & Sections

MARK	DATE	REVISIONS
1		
2		
3		

JOB NO. 22075
DRAWN: Ricca
CHECKED: Ricca
DATE: 09/20/2024

QF501-5
18 OF 21 SHEETS

IDENTIFICATION STAMP
DIV. OF THE STATE ARCHITECT
APP: 03-122528 INC:
REVIEWED FOR
SS ☑ FLS ☑ ACS ☑
DATE: 01/06/2025

A/R-1 NEXT-GEN UNI-PAK AIR COOLED CONDENSER PHYSICAL DIMENSIONS

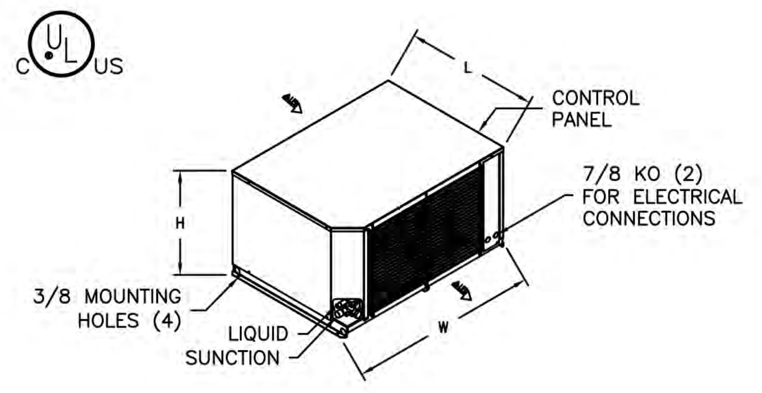

CABINET SIZE	CONDENSER FAN MTR. QTY.	DIMENSION (INCHES)		
		L	W	H
FM3	2	28-1/4	39-7/8	21-1/4
FM4	1	33	43-7/8	35

COLDZONE ENGINEERING SUMMARY

POWER SUPPLY: REFER TO SYSTEM VOLTAGE AND PHASE

IDENT.		FIXTURES				COMPRESSORS									EVAPORATOR COILS										LINE SIZES **						ACCESSORIES				
SYSTEM	ITEM	DESCRIPTION	REQ'D MBTUH	TEMP. °F FIXT.	TEMP. °F SUCT.	REFRIG. R-	MODEL NO.	C/U WEIGHT (LBS)	FRAME SIZE	H.P.	ELECTRICAL CHARACTERISTIC AT 60 HZ. RLA	V	PH	MBH. AT 110° F	DEFROST *	QUANTITY	MODEL NO.	MFR. / REMARKS	FAN 1 PH AMP	FAN V	HEATER AMP	HEATER V	HEATER PH	DEFROST OPTION NO.	ROUTE +	SUCTION	RISER	LIQUID	DISCH.	SYSTEM MOPD	CRANKCASE HEATER	HEAD PRESSURE CONTROL	FURNISHED BY (SEE CODE) T-STAT	SOL. VALVE	TXV/EXV
A	A54.1/A54.2	WALK-IN COOLER #A54	13.0	35	25	448A	CF0200E4SEANT	215	FM3	2.0	10.6	208	3	14.8	T	2	CL6A073ADA	COLDZONE	3.2	115				KE2 DD	S	7/8		3/8		20	FI			FI	FI
B	A64.1/A64.2	WALK-IN FREEZER #A64	14.1	-10	-20	448A	CF0500L4SEBNT	352	FM4	5.0	20.1	208	3	14.2	E	2	CL6E066DDA	COLDZONE	2.0	208	19.6	208	1	KE2 DD	S	1 1/8		3/8		40	FI			FI	FI

LEGEND:
- * T— AIR DEFROST E— ELECTRIC G— GRAVITY [W/TIMER] E^— DEFROST CLOCK BY FIXTURE MANUFACTURER
- + S—SINGLE M—MAIN B— BRANCH
- ** VERIFY LINE SIZES WITH JOB SITE CONDITIONS

SUPPLY CODES:
MFR– FURNISH WITH FIXTURE
FL – CZ TO FURNISH AND SHIP LOOSE
FI – CZ TO FURNISH AND INSTALL ON UNIT
RC – FURNISH AND INSTALL BY REF. CONTRACTOR

NOTES:
- ALL EVAPORATOR COILS WILL REQUIRE POWER FROM A HOUSE CIRCUIT
- EVAPORATOR COILS ARE SUPPLIED WITH KE2 DEMAND DEFROST CONTROLS
- EACH SYSTEM SUPPLIED WITH MOUNTED FUSED DISCONNECT SWITCH
- EACH SYSTEM SUPPLIED WITH SUCTION LINE KIT INCLUDING A SUCTION LINE FILTER
- LIQUID LINE KIT WITH SEALED FILTER/DRIER AND SIGHT GLASS WITH MOISTURE INDICATOR
- ALL COMPRESSORS AND CONDENSER CIRCUITS ARE SIZED TO OPERATE AT 110° F AMBIENT

THE INFORMATION DISCLOSED HEREIN WAS ORIGINATED BY AND IS THE PROPERTY OF COLDZONE AND EXCEPT FOR RIGHTS EXPRESSLY GRANTED TO THE CUSTOMER, COLDZONE RESERVES ALL PATENT, PROPERTY, DESIGN, USE, SALE, MANUFACTURING AND REPRODUCTION RIGHTS THERETO.

GENERAL NOTES

REFRIGERATION PIPE SIZES ARE BASED ON A MAXIMUM LINE RUN OF 100 EQUIVALENT FEET FOR LIQUID AND SUCTION LINES. THIS INCLUDES AN ALLOWANCE OF 45 EQUIVALENT FEET FOR VERTICAL RISERS. LINE RUNS LONGER THAN 150 EQUIVALENT FEET MAY VOID THE LINE SIZES INDICATED ON OUR SUBMITTAL DRAWING

IT IS THE INSTALLING CONTRACTORS RESPONSIBILITY TO FOLLOW ALL APPLICABLE CODES AND CURRENT REFRIGERATION INDUSTRY STANDARDS AND PRACTICES WHEN DETERMINING LINE SIZES, AND INSTALLING AND STARTING UP COLDZONE EQUIPMENT

EVAPORATOR AND PIPING SERVICE / ISOLATION VALVES ARE RECOMMENDED FOR PARALLEL AND MULTIPLEX SYSTEMS. THESE VALVES ARE TO BE SUPPLIED AND INSTALLED BY THE INSTALLING CONTRACTOR

C/R-1 MINIMUM CLEARANCE REQUIREMENTS AIR-COOLED NEXT-GEN UNI-PAK

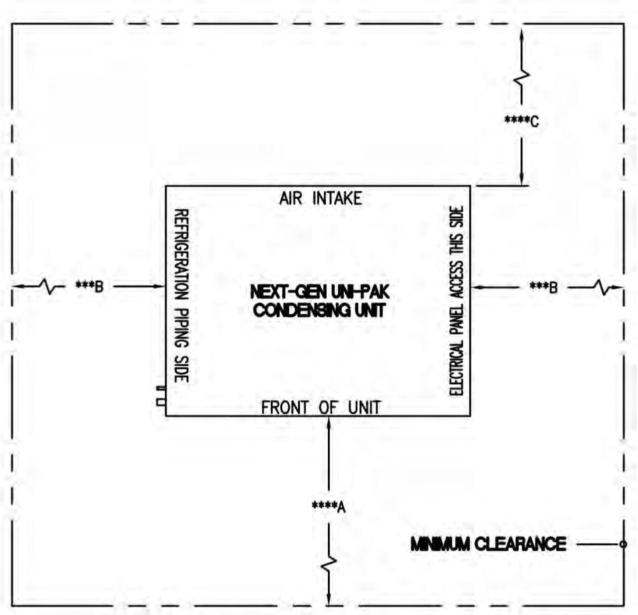

CONDENSING UNIT DESCRIPTION	MINIMUM DIMENSION (INCHES) A	B	C
UNI-PAK 0.5 H.P. – 2.0 H.P.	60	36	36
UNI-PAK 3.0 H.P. – 6.0 H.P.	72	36	36

***48" MINIMUM CLEARANCE FOR CONDENSING UNITS POSITIONED SIDE BY SIDE.
****120" MINIMUM CLEARANCE FOR CONDENSING UNITS POSITIONED IN FRONT OF ANOTHER.

D/R-1 COLDZONE EVAPORATOR COIL LOW PROFILE

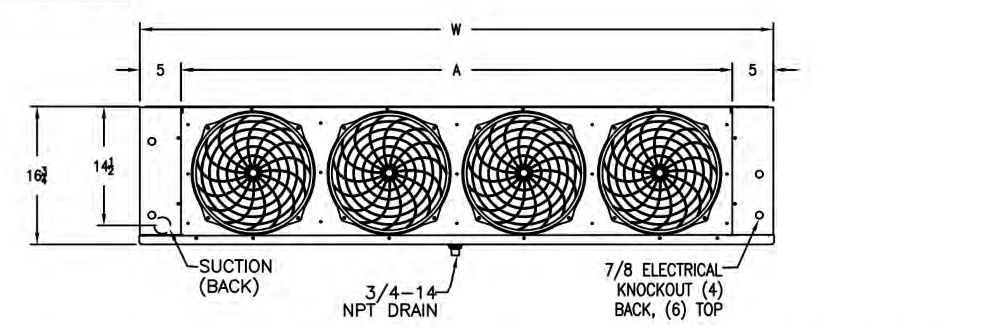

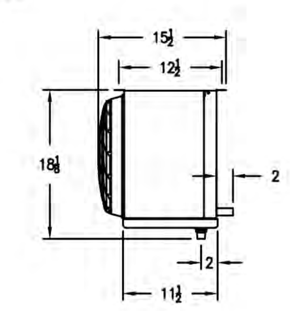

EVAPORATOR COIL(S) INCHES							
SYSTEM	ITEM NO.	MODEL NO.	QTY.	NO. OF FANS	A	W	WEIGHT (LBS. EACH)
A	A54.1	CL6A073ADA	1	2	33 1/4	43 5/8	52
	A54.2	CL6A073ADA	1	2	33 1/4	43 5/8	52
B	A64.1	CL6E066DDA	1	2	33 1/4	43 5/8	52
	A64.2	CL6E066DDA	1	2	33 1/4	43 5/8	52

ENGINEERING GUIDE SPECIFICATION
NEXT-GEN UNI-PAK AIR-COOLED CONDENSING UNIT

THE REFRIGERATION PACKAGE SHALL BE A PRE-ENGINEERED AND FACTORY ASSEMBLED UNIT TRADE NAME "NEXT-GEN UNI-PAK", AS MANUFACTURED BY COLDZONE, A DIVISION OF HEAT TRANSFER PRODUCTS GROUP, 1933 VINEYARD AVE. ONTARIO, CA 91761. PHONE: (909) 786-3656, FAX: (714) 529-8503.

CONTRACTOR SHALL FURNISH AND INSTALL, WHERE SHOWN ON PLANS COLDZONE U.L. APPROVED "NEXT-GEN UNI-PAK" AIR-COOLED CONDENSING UNIT WITH EVAPORATOR COIL. ALL UNIT SHALL BE ELECTRICALLY TESTED AND SHIPPED WITH A DRY NITROGEN HOLDING CHARGE AND READY FOR FIELD INSTALLATION.

1. UNI-PAK CONSTRUCTION
   A. ALL TUBING SHALL BE SECURELY SUPPORTED AND ANCHORED WITH CLAMPS.
   B. THE PACKAGE SHALL BE MOUNTED ON A HEAVY DUTY GALVANIZED STEEL BASE.
   C. AIR-COOLED CONDENSING UNIT SHALL HAVE AN APPROPRIATE STYLE COMPRESSOR WITH SUCTION AND DISCHARGE SERVICE VALVES. COMPRESSOR MOTOR SHALL BE HIGH TORQUE, SCROLL INDUCTION TYPE, 1750 RPM AND SHALL BE PROTECTED AGAINST OVERLOAD, SINGLE PHASING AND LOCKED MOTOR CONDITION. THE UNIT SHALL BE PROVIDED WITH AIR COOLED CONDENSER COIL WITH STAGGERED TUBE DESIGN FOR GREATER THERMAL EFFICIENCY. THE COIL SHALL BE TESTED TO 400 PSI AND SHALL BE SELF DRAINING TO ASSURE EFFICIENT OPERATION AND OIL RETURN. THE CONDENSER FAN MOTOR SHALL BE INHERENTLY PROTECTED AND HAVE LIFE LUBRICATED BALL BEARINGS. A FAN GUARD SHALL BE PROVIDED WITH EACH MOTOR. THE UNIT SHALL BE PROVIDED WITH A LIQUID RECEIVER RATED AT 90% OF ITS CAPACITY. IT SHALL BE SUPPLIED WITH A FUSIBLE PLUG AND SHALL CONFORM TO U.L. OR ASME CODES AND SHALL BEAR THE APPROPRIATE LABEL
OR
      STAMP. AN OIL FAILURE SWITCH ON UNITS WITH OIL PUMPS AND DUAL PRESSURE CONTROL SHALL BE INCLUDED WITH THE UNIT.
   D. ALL INTERNAL PIPING SHALL BE PRE-PIPED TO OUTSIDE OF ENCLOSURE WITH DRIER, SIGHT GLASS AND VIBRATION ELIMINATORS FOR SUCTION LINES.
   E. ENDS OF LINES SHALL BE CAPPED AGAINST CONTAMINATION AFTER THE UNIT IS COMPLETED. THESE CAPPED ENDS ARE TO BE OPENED ONLY AT FINAL CONNECTION OF THE PACKAGE TO FIXTURES.
2. EVAPORATOR COILS
   A. EVAPORATOR COILS SHALL BE DIRECT EXPANSION TYPE FABRICATED OF COPPER TUBES WITH ALUMINUM FINS.
   B. EVAPORATOR COILS SHALL BE PROVIDED WITH SOLENOID VALVE, THERMOSTATIC EXPANSION VALVE, AND THERMOSTAT PIPED AND WIRED TO THE JUNCTION BOX FOR POSITIVE PUMP DOWN OR IF SUPPLIED WITH ECONET THE CONTROL PACKAGE INCLUDES ELECTRONIC EXPANSION VALVE, SUCTION PRESSURE TRANSDUCER, SUCTION, ENTERING AIR, COIL TEMP THERMISTORS AND LOCAL DISPLAY WITH PUSH BUTTON ADJUSTMENTS.

GENERAL NOTES

1. GENERAL CONTRACTOR
   A. CONTRACTORS SHALL VERIFY ALL DIMENSIONS AND COORDINATE WITH OTHER TRADES.
   B. GENERAL CONTRACTOR SHALL PREPARE THE PLATFORM, CURBED OPENINGS AND WEATHERPROOFING THE SAME AFTER INSTALLATION.
2. REFRIGERATION CONTRACTOR
   A. THE COMPLETE SYSTEM SHALL BE EVACUATED WITH VACUUM PUMP.
   B. CHARGE, TEST AND ADJUST EACH UNIT TO ASSURE PROPER OPERATION.
   C. ALL COPPER TUBING TO BE REFRIGERANT GRADE A.C.R. OR TYPE "L".
   D. SILVER SOLDER AND/OR SIL-FOS SHALL BE USED FOR ALL REFRIGERANT PIPING. SOFT SOLDER IS NOT ACCEPTABLE.
   E. ALL PIPING TO BE PRESSURE TESTED WITH NITROGEN AT 300 PSI. AFTER THE CONDENSING UNIT AND COIL HAVE BEEN CONNECTED, THE BALANCE OF THE SYSTEM SHALL BE LEAK TESTED WITH ALL VALVES OPEN.
   F. REFRIGERATION CONTRACTOR TO PROVIDE AND INSTALL DRAIN LINE HEATER IN FREEZER TO BE CONNECTED BY ELECTRICAL CONTRACTOR.
3. ELECTRICAL CONTRACTOR
   A. ELECTRICAL CONTRACTOR TO CONNECT DRAIN LINE HEATER IN FREEZER.
   B. ELECTRICAL CONTRACTOR TO PROVIDE POWER FOR CONDENSING UNIT AND EVAPORATOR COIL AS CALLED FOR IN THE WIRING DIAGRAM.
   C. ALL ELECTRICAL WIRING AND INSTALLATION SHALL BE IN ACCORDANCE WITH THE WIRING DIAGRAM AND LOCAL CODES.
4. PLUMBING CONTRACTOR
   A. PLUMBING CONTRACTOR TO PROVIDE A.C.R. OR TYPE "L" COPPER DRAIN LINES FOR WALK-IN REFRIGERATION AND FREEZER, PITCHED 1/4" PER FOOT OF RUN. IN FREEZER, UNHEATED DRAIN LINE MUST BE OUTSIDE OF INSULATION TO PREVENT FREEZING. TRAP DRAIN LINE OUTSIDE OF REFRIGERATED SPACE TO AVOID ENTRANCE OF WARM AND MOIST AIR.
   B. PLUMBING CONTRACTOR TO PROVIDE INDIVIDUAL DRAIN LINE FOR EACH EVAPORATOR UNLESS OTHERWISE CALLED FOR.
   C. ALL PLUMBING INSTALLATION SHALL BE IN ACCORDANCE WITH LOCAL CODES.

E/R-1 DRAIN LINE DETAIL

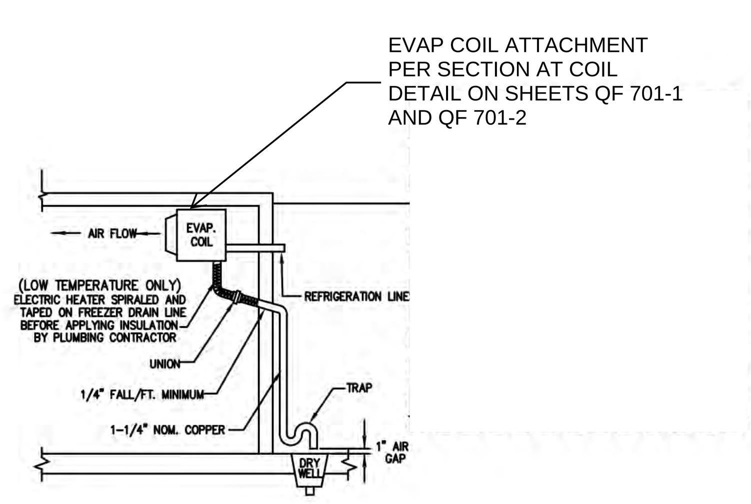

F/R-1 KE2 DEMAND DEFROST WIRING DIAGRAM

NOTES:

1. USE COPPER CONDUCTORS ONLY
2. UNIT MUST BE GROUNDED
3. FOR MOTOR AND HEATER AMPS SEE RATING ON OUTSIDE OF UNIT. ALSO SHOWN IN REFRIGERATION SCHEDULE ABOVE.
4. FREEZER EVAPORATOR COIL(S) ARE POWERED DIRECTLY FROM BUILDING CIRCUIT BREAKER PANEL. NO INTER-WIRING REQUIRED BETWEEN COLDZONE CONTROL PANEL AND EVAPORATOR COIL(S).

LEGEND:

HS – HEATER SAFETY
HTR – DEFROST HEATER
LLS – LIQUID LINE SOLENOID
M1 TO M6 – FAN MOTOR
KE2 – REFERS TO ELECTRONIC CONTROLLER CONNECTIONS

WIRING: ——— FACTORY WIRED
— — FIELD WIRING BY EC

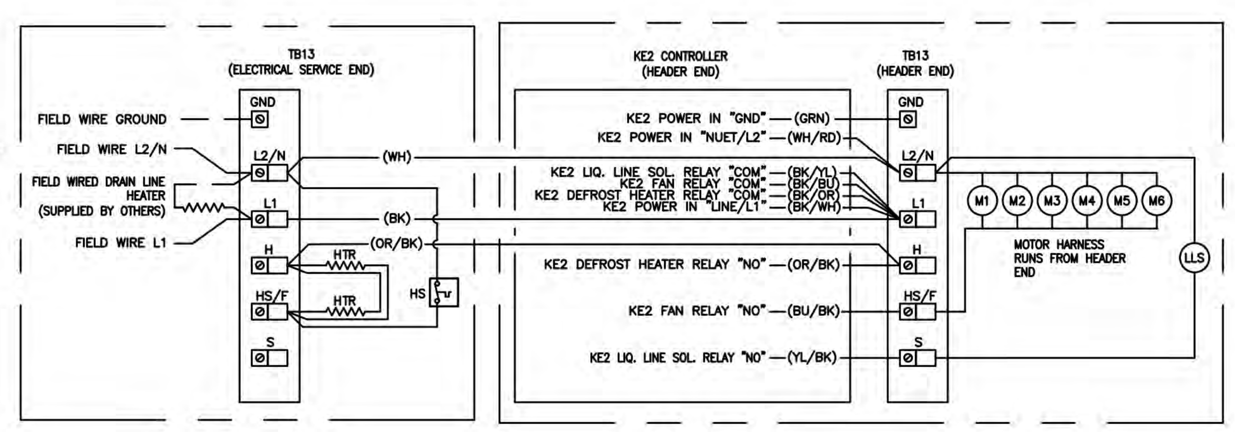

master dwg revised 15JUL16 (CA)

REV	DESCRIPTION	DATE
0	INITIAL RELEASE	5/4/22

HTPG
ColdZone
1810 S. VINEYARD AVE. ONTARIO, CA 91761 (909) 786-3656 (714) 529-8503 FAX

Project Name and Address
HIGHLAND HIGH SCHOOL
BAKERSFIELD, CA
NOT DRAWN TO SCALE

DRAWING NUMBER: 21534
JOB NUMBER:
DATE: 5/4/2
SHEET NUMBER: R-1
DRAWN BY: CA
22-0783

Highland High School.xls

PTN: 63529-385 FILE: 15-H3

HIGHLAND HIGH SCHOOL
CAFETERIA REHABILITATION AND MODERNIZATION
2900 ROYAL SCOTS WAY
FOR
KERN HIGH SCHOOL DISTRICT
BAKERSFIELD, KERN COUNTY, CALIFORNIA

SC ARCHITECT INC.
1601 NEW STINE ROAD, SUITE 280
BAKERSFIELD, CA 93309
PH: (661) 397-4377
FAX: (661) 397-4378
WWW.SCARCHITECT.COM

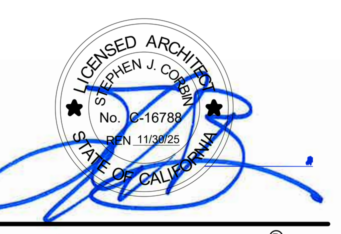

STEPHEN J. CORBIN, NCARB, AIA, LEED ®AP

CHECK AND VERIFY ALL DIMENSIONS BEFORE PROCEEDING WITH THE WORK. REPORT DISCREPANCIES TO THE ARCHITECT. ALL CONSTRUCTION SHALL CONFORM TO THE C.B.C.

ricca design studios
5613 DTC Parkway | Suite 100
Greenwood Village, CO 80111
303.221.0500
www.ricca.com

Foodservice Refrigeration System Details

MARK	DATE	REVISIONS
1		
2		
3		

JOB NO.: 22075
DRAWN: Ricca
CHECKED: Ricca
DATE: 09/20/2024

NOT TO SCALE

QF700-1

Q37787 A-13

IMPORTANT!

These drawings represent our understanding of the requirements of your order. We submit them to you for the purpose of securing complete approval of sizes, finishes, framing, insulation, dimensions, specifications, and interpretations. The return of these drawings to us with instructions to proceed, or subsequent instructions to that effect, shall constitute complete approval.

Approved by ______________ Date ________

WARNING

DO NOT EXPOSE CARTONED OR STACKED PANELS TO MOISTURE OR HIGH HUMIDITY CONDITIONS DURING STORAGE. STAINING OR OXIDIZING OF METAL SKINS MAY OCCUR.

NOTICE

THIS ORDER CANNOT BE PLACED INTO PRODUCTION UNTIL WE RECEIVE FINAL APPROVED DRAWING AND SPECIFICATIONS. THE DATE OF RECEIPT CAN AFFECT YOUR PROMISED DELIVERY DATE.

THIS THERMO-KOOL WALK-IN WILL BE MANUFACTURED TO UL & NSF REQUIREMENTS. THERMO-KOOL ACCEPTS NO LIABILITY FOR LOCAL CODE REQUIREMENTS OF WHICH THERMO-KOOL HAS NOT BEEN MADE AWARE IN WRITING PRIOR TO FABRICATION.

Thermo-Kool®
WALK-IN PANEL
Thermo-Kool/Mid-South Industries, Inc.
R-14781
CLASSIFIED C UL US
BUILDING UNITS
1F68

USA
SURFACE BURNING CHARACTERISTICS

MATERIAL DETAILS	FLAME SPREAD	SMOKE DEVELOPED
ALUMINUM PANELS, PAINTED OR UNPAINTED, 5" OR LESS	15	300-400
GALVANIZED OR STAINLESS STEEL PANELS, PAINTED OR UNPAINTED, 5" OR LESS	20	450-OVER 500
CORE MATERIAL, 6" THICK	20	250

CANADA
SURFACE BURNING CHARACTERISTICS / CARACTERISTIQUES DE COMBUSTION SUPERFICIELLE IN ACCORDANCE WITH THE STANDARD / SELON LA NORME CAN/ULC-S102

MATERIAL DETAILS / DETAILS DU MATERIAL	FLAME SPREAD / INDICE DE PROPAGATION DEL LA FLAMME	SMOKE DEVELOPED INDICE DE DEGAGEMENT DES FUMEES
ALUMINUM PANELS, PAINTED OR UNPAINTED, 127 MM (5 IN.) THICK OR LESS, PANNEAUX EN ALUMINIUM, PEINTS OU NON PEINTS, 127 MM (5 PO) D'EPAISSEUR OU MOINS	10	105
GALVANIZED OR STAINLESS STEEL PANELS, PAINTED OR UNPAINTED, 127 MM (5 IN.) THICK OR LESS, PANNEAUX EN EN ACIER GALVANISE OU EN ACIER INOXYDABLE, PEINTS OU NON (5 PO) D'EPAISSEUR OU MOINS	5	175
CORE MATERIAL, 150 MM (6 IN.) MATERIAU DE BASE, 150 MM (6 PO)	295	100

PULL DOWN RATE TO 45° F IS UNRESTRICTED. AFTER 45 ° F, PULL DOWN RATE SHOULD BE RESTRICTED TO 10° F PER/ 24 HOUR PERIOD.

NOT APPLICABLE TO BLAST CHILLER CABINETS.

"THERMO-KOOL WALK-IN COOLERS AND FREEZERS COMPLY WITH 2021 INTERNATIONAL ENERGY CONSERVATION CODE (IECC), SECTION C403.11"

Panel Construction:
All panels shall consistof metal pans formed to precise dimensions. Metal finish to be as specified. Insulation shall be "foamed-in-place" urethane foam bonded permanently to the complete inner surfaces of both interior and exterior metal pans to form a strong rigid unit. Each panel shall be 100% urethane foam insulation exclusive of metal pans. Perimeter structure shall be formed of DURATHANE, high-density urethane insulation forming tongues and grooves to assure vapor-proof and airtight joints and to prevent pre-installation damage and deterioration of low-density urethane.

Insulation:
Insulation shall be 4" thick rigid, low ozone depleting HFO Solstice 1233A Class I urethane foam classified according to UL723(ASTM-E-84) as tested by Underwriters Laboratories, Inc. The 4" core material shall have a flame spread of 25 or less and a smoke density of250.

The prefabricated, urethane foam panels shall be supplied with a Class I fire hazard classification according to UL723 (ASTM-E- 84) as tested by Underwriters Laboratories, Inc. Panels shall have a flame spread rating of 25 or less with a certifying Underwriters Laboratories, Inc. label.

- DURATHANE high-density frame combines great strength with high insulation value.
- Insta-Lok panel locks speed set-up.
- Low-density urethane foamed-in-place bonds to metal pans is twice as efficient as other insulation materials.

REVISED

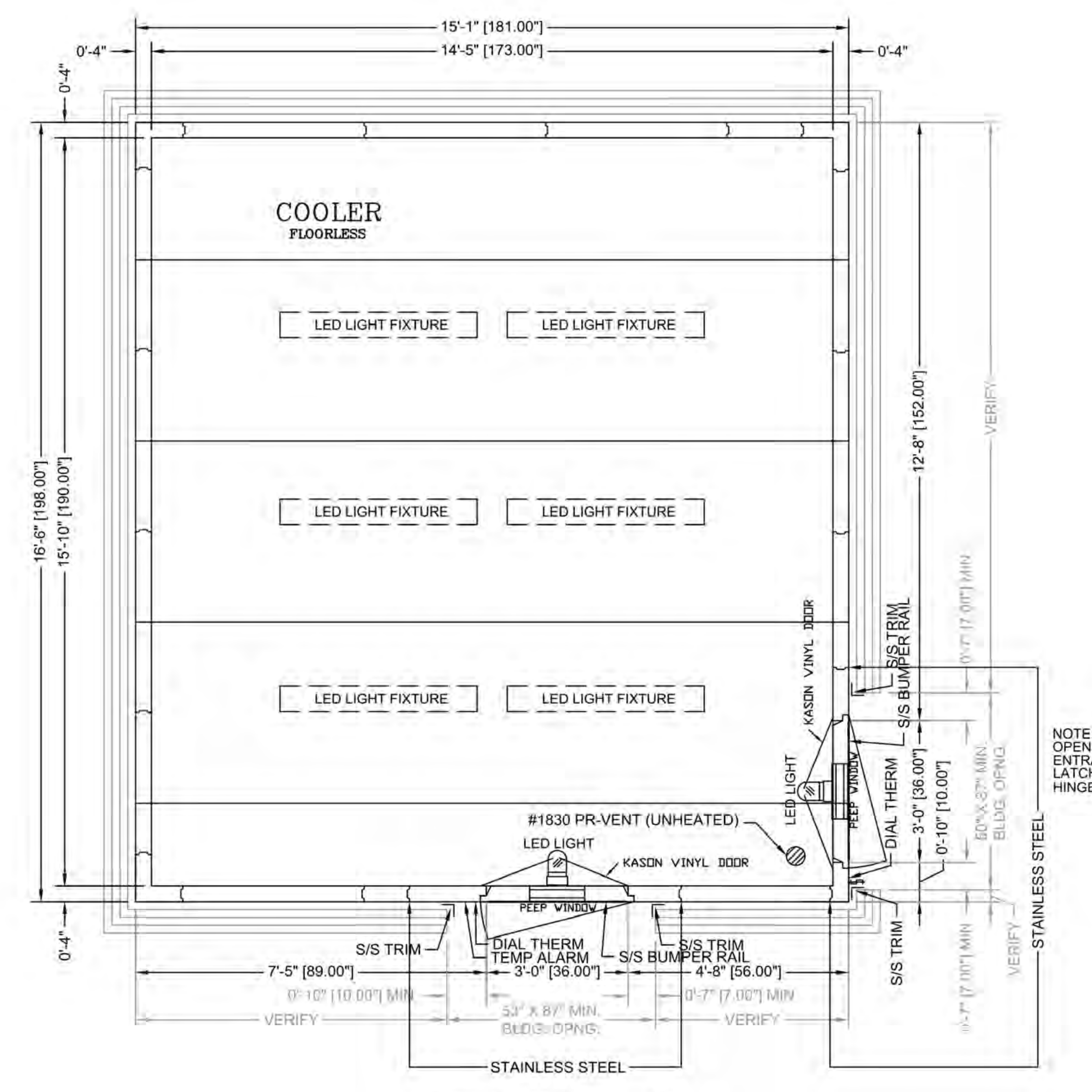

NOTE: 53" X 87" MIN. BUILDING WALL OPENING REQ'D FOR ENTRANCE DOOR WITH 10" MIN. ON LATCH SIDE AND WITH 7" MIN. ON HINGE SIDE OF DOOR

NOTE: 50" X 87" MIN. BUILDING WALL OPENING REQ'D FOR SECONDARY ENTRANCE DOOR WITH 7" MIN. ON LATCH SIDE AND WITH 7" MIN. ON HINGE SIDE OF DOOR.

VERIFY !!!

- * VERIFY ALL DIMENSIONS
- * VERIFY HEIGHT AFF FOR TRIM & ENCLOSURES
- * VERIFY LOCATION OF BUILDING WALLS
- * VERIFY FLOOR DETAIL
- * VERIFY LOCATION OF BUMPER RAILS
- * VERIFY SIZE OF BUILDING OPENING SIZE(S)
- * VERIFY HEIGHT A.F.F. OF BUMPER RAILS

(CONSULTANT: RICCA DESIGN STUDIOS)

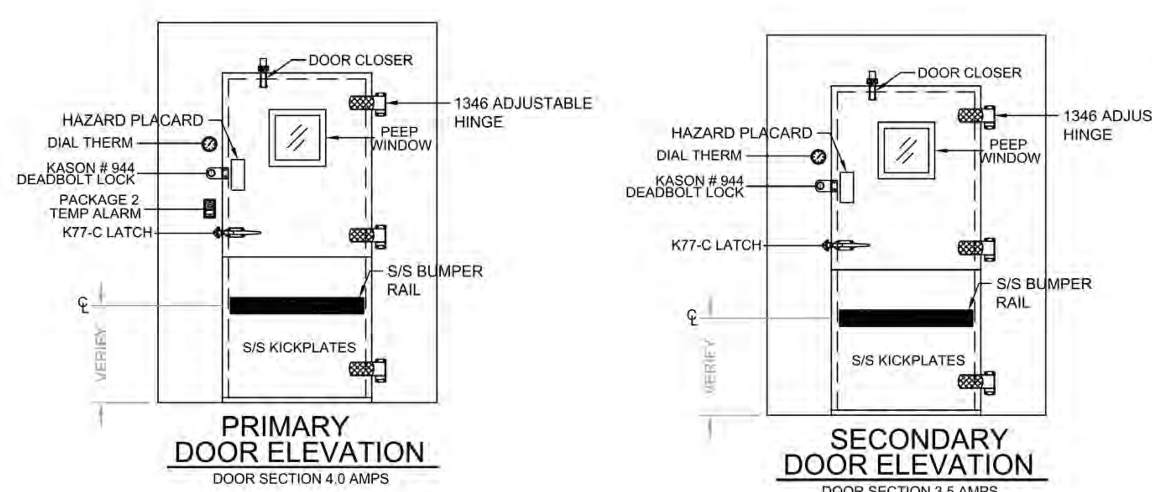

PRIMARY DOOR ELEVATION
DOOR SECTION 4.0 AMPS

SECONDARY DOOR ELEVATION
DOOR SECTION 3.5 AMPS

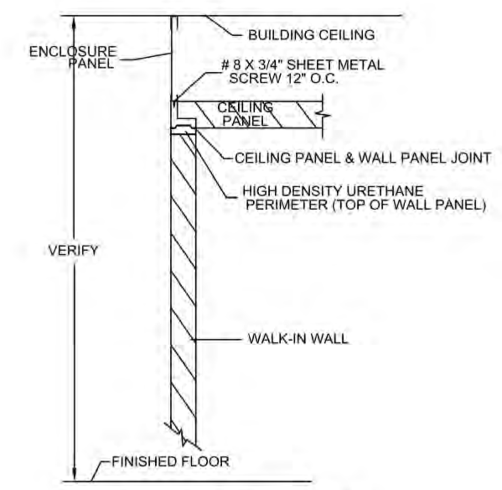

ENCLOSURE PANEL DETAIL

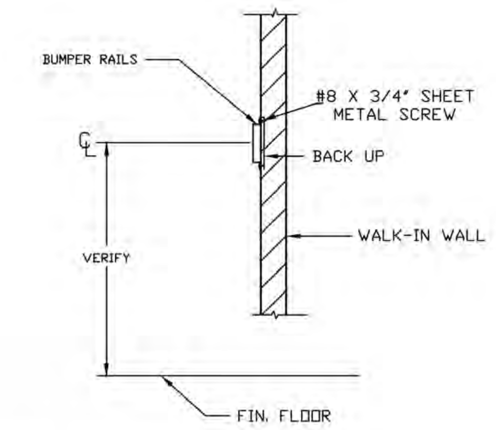

HAT SHAPED BUMPER RAILS

NOTE: COVED BASE IS REQ'D FOR NSF INSTALLATION. (BY OTHERS)

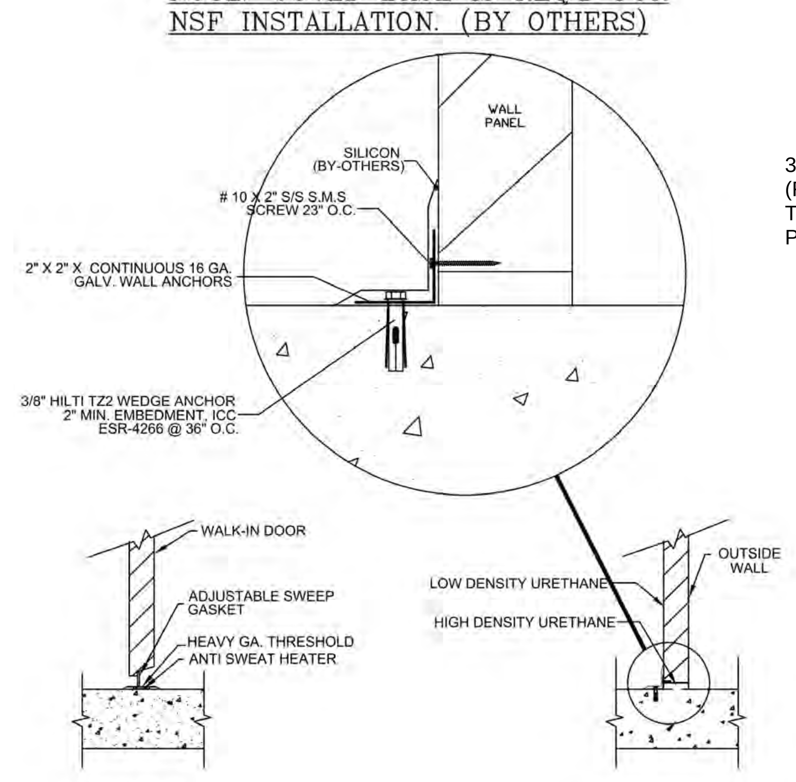

SECTION THRU DOOR

SECTION THRU OUTSIDE WALL

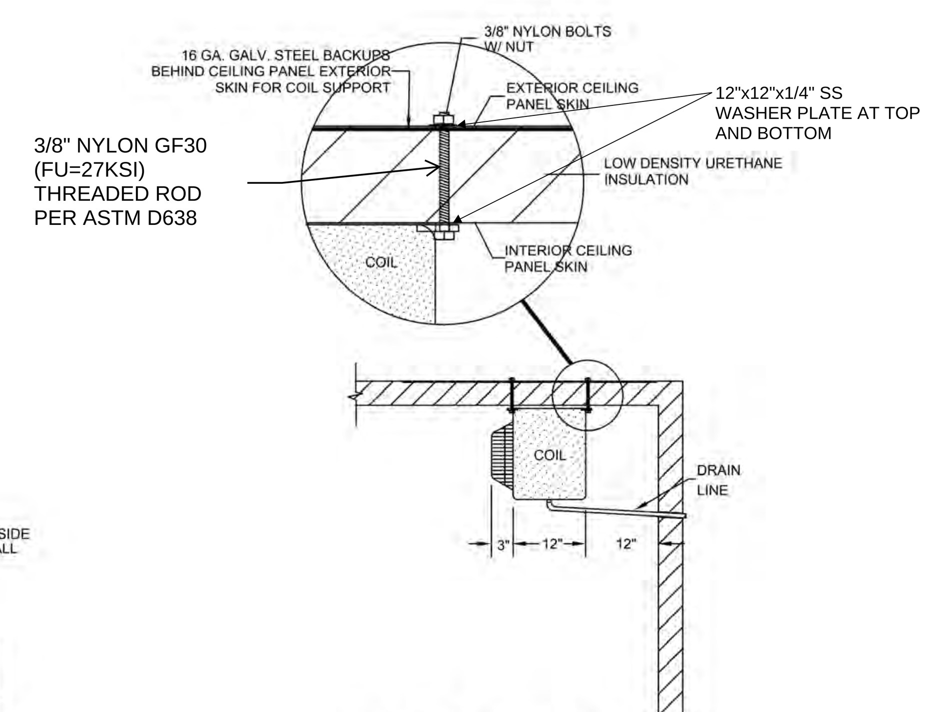

SECTION @ COIL
(FOR GRAPHIC PURPOSES ONLY. EVAPORATOR COIL PROVIDED BY OTHERS)

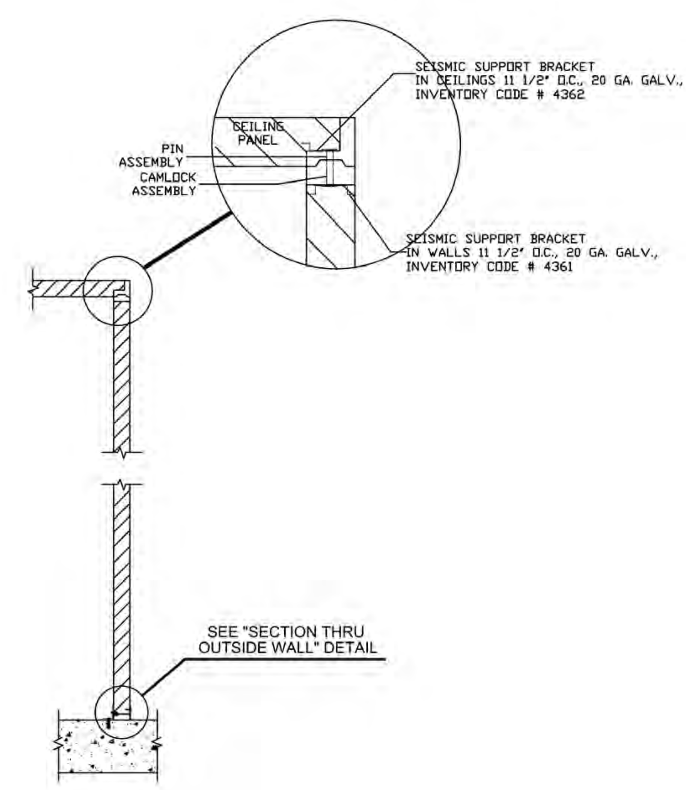

SEISMIC SUPPORT BRACKET DETAIL

OVERALL DIMENSIONS WIDTH 15'-1" DEPTH 16'-6" HEIGHT 8'-6"

23

FINISH-Exterior
- UNEXPOSED [x] 26 Ga. Stucco Embossed Galv. Steel
- [ ] .040 Stucco Aluminum
- EXPOSED [x] 20 Ga. Type 304 #3 Finish Stainless Steel
- [ ] White Stucco Aluminum
- [ ] White Smooth Aluminum
- [ ] White Stucco Galv.
- [ ] White Smooth Galv.

Interior (walls and ceiling)
- [ ] 26 Ga. Stucco Embossed Galv. Steel
- WALLS [x] .040 Stucco Aluminum
- [ ] 20 Ga. Type 304 #3 Finish Stainless Steel
- [ ] White Stucco Aluminum
- CEILING [x] White Smooth Aluminum
- [ ] White Stucco Galv.
- [ ] White Smooth Galv.

FINISH-Interior Floor
- [x] Built-in by others. (Breaker strip must be under all wall panels including partitions)
  - [ ] 4" x 2" Vinyl U-Channel Screeds [x] Wall Anchors [ ] 4 1/4" Foam Screeds [ ] 2 1/4" Vinyl Screeds
- [ ] 14 Ga. Bright Galvanized Steel
- [ ] 16 Ga. Stainless Steel. SEE DETAIL BELOW
- [ ] Smooth Aluminum
- [ ] Treadbrite Aluminum Foamed-In-Place

THERMO-KOOL WALK-IN FLOOR PANELS ARE DESIGNED TO WITHSTAND UNIFORMLY DISTRIBUTED STATIONARY LOADS OF 600 LBS. PER SQUARE FOOT. THERMO-KOOL'S WARRANTY DOES NOT COVER DAMAGE DUE TO PALLET JACKS, MOBILE CARTS, MOBILE SHELVING, FORK LIFTS, OR ANY OTHER FORM OF ROLLING TRAFFIC. A CONC. WEARING FLOOR MUST BE INSTALLED ON TOP OF THE WALK-IN FLOOR PANELS FOR THIS APPLICATION.

SECTION FASTENERS-Thermo-Kool cam type Insta-Lok
INSULATION-4" thickness "Foamed-in-place" urethane-DURATHANE CONSTRUCTION CLASS I

- [ ] OUTDOOR INSTALLATION
  - [ ] Vinyl weather roof W/ Facia Bar & Cover
  - [ ] Sloped Foam [ ] ______SQ. FT. OF 4-MIL POLYETHYLENE (BETWEEN SLOPED FOAM & VINYL WEATHERCAP)
  - [ ] Aluminum weather roof by Thermo-Kool (W/ Weathercap Trim)
- [x] INDOOR INSTALLATION

ELECTRICAL-All wiring contained within the door sections is 115/60/1Ø. Connections to this and all other lights and refrigeration supplied by others.
- [x] UNEXPOSED CONDUIT - Wiring stubs out top of panels 8"
- [ ] EXPOSED CONDUIT - Wiring terminates in a field service box at top of panels

ENTRANCE DOOR-Flush infitting type with poly vinyl magnetic gasket and vinyl sweep gasket on bottom edge. Heater cables are built in around door opening to prevent frost accumulation and sweating. Ext. has a thermometer, indicating light and toggle switch. Interior has vapor proof light. Hinges are cam action type.
* Door finishes will be the same as adjacent panels unless specified otherwise under Door Accessories.

DOOR SIZE & QTY	HARDWARE	SWING
[ ] ( ) 34" x 76"	[ ] 1238-C LATCH, (2) 1346 PERFORMER ADJUSTABLE HINGES, DOOR CLOSER	[x] RH
[ ] ( ) 30" x 76"	[ ] 1238-C LATCH, (3) 1346 PERFORMER ADJUSTABLE HINGES, DOOR CLOSER	[ ] LH
[x] (2) 36" x 78"	[x] K77-C LATCH W/ 481 SAFETY GLOW PUSH RELEASE, (3) 1346 PERFORMER ADJUSTABLE HINGES, DOOR CLOSER	

- [x] DOOR ACCESSORIES
  - [x] (2) 14" x 14" Peep Window(s)W/ HEATED FRAME & GLASS
  - [ ] ( ) 14" x 24" Peep Window(s)W/ HEATED FRAME & GLASS

*CENTER VP LIGHTS ABOVE DOORS

(2) KASON # 1806 LED LIGHT FIXTURE(S) W/ BULBS ON DOOR FRAME(S)
16 GA. STAINLES STEEL INT/EXT KICKPLATES 36" HIGH
(2) KASON # 944 DEADBOLT LOCK FOR COOLER
(2) SET(S) OF KASON VINYL DOORS TO FIT A THERMO-KOOL 36" X 78" DOOR
(1) THERMOSTATICALLY CONTROLLED HEATER WIRE, MD-1 MOTION DETECTOR &IP-1 PANIC SWITCH AT SECONDARY ENTRANCE DOOR
(1) THERMO-KOOL PACKAGE 2 TEMP ALARM/DOOR MONITOR WITH PANIC SWITCH, MOTION DETECTOR, BATTERY BACKUPS, DRY CONTACTS AND THERMOSTATICALLY CONTROLLED HEATER WIRE
(1) CORNER DOOR FRAME

NOTE: CONDUIT TO TURN AND RUN UP OUTER EDGE OF DOOR FRAME TO AVOID THE SCREWS COMING IN CONTACT W/ CONDUIT DURING INSTALLATION OF KASON DOOR(S).

NOTE: SJ CABLES TO BE MOUNTED ON EXTERIOR SIDE OF DOORS & FRAMES.

- [x] MISCELLANEOUS EQUIPMENT
  - [ ] ( ) Lights (NOT MOUNTED) 1 AMP EACH
  - [ ] Interior Floor Ramp
  - [ ] Exterior Floor Ramp
  - [ ] # 1825 Heated Pressure Relief Vent .5 AMPS EACH
  - [x] (1) # 1830 Heated Pressure Relief Vent (UNHEATED)
  - [ ] # 1832-4 Heated Pressure Relief Vent .5 AMPS EACH
  - S/S [x] Trim & Enclosures (see detail)

(6) 48" LED LIGHT FIXTURE(S) W/ BULBS (.4 AMPS)
(1) SEISMIC SUPPORT PACKAGE (SEE DETAIL)
(1) ROW OF HAT-SHAPED S/S BUMPER RAILS ON EXPOSED EXTERIOR (SHIPPED LOOSE)(SEE DETAIL)

REFRIGERATION- [ ] Aircooled [ ] Watercooled [x] By Others

- [ ] Condensing unit indoor
- [ ] Condensing unit outdoor
- [ ] Side Mounted Self Contained
- [ ] Top Mounted Self Contained
- [ ] Quick Connect [ ] Remote [ ] Top Mounted
- [ ] Prewired, Preassembled Remote

CONTROL KIT-The following controls indicated with a mark are included.
- [ ] Expansion valve
- [ ] Dryer
- [ ] Sight glass
- [ ] Temperature control
- [ ] Pump down solenoid valve
- [ ] Freezer Time Clock
- [ ] Pressure control
- [ ] Suction line vibration eliminator
- [ ] Winter control
- [ ] Crankcase heater
- [ ] Condensing unit cover
- [ ] Coil Mounting Kit

NOTE: IF REFRIGERATION IS NOT SUPPLIED WITH WALK-IN, BASED ON AN AMBIENT OF 100 DEGREES F, FOR NSF APPLICATIONS AT STANDARD HOLDING TEMPERATURES FOR A COOLER THE BTU RATING SHALL BE 12,721.

NSF®

NOTES: Aircooled condensing units should be placed in a well ventilated area with a minimum of 1000 CFM's per/H.P.
Evaporator drain connections by others.
NOTE: THERMO-KOOL recommends a 1" min. clearance between walk-in & building walls.

ITEM # A54

BCAD

DATE	REV. BY	REVISIONS DESCRIPTION
08/23/2022	JL	REMOVED SLAB INSULATION AND BREAKER STRIPS FROM FLOOR DETAIL; ADDED COVED BASE NSF NOTE
12/18/2023	JL	CHANGE DOOR CLOSER
9-11-24	DW	ADDED VARIOUS DETAILS & NOTES.

NOTE: THIS DRAWING, AND ALL DRAWINGS OR SPECIFICATIONS SUBMITTED BY THERMO-KOOL, AND REPRODUCTIONS THEREOF IN WHOLE OR IN PART SHALL REMAIN THE LEGAL PROPERTY OF MID-SOUTH INDUSTRIES, INC., SUBJECT TO RECALL AT ANY TIME AND SHALL NOT BE USED FOR INSTALLATIONS OR PRODUCTION BY OTHERS EXCEPT BY OUR SPECIAL PERMISSION IN WRITING.

Walk-in panels manufactured under Patent # 5,424,118.

Thermo-Kool®
Mid-South Industries, Inc. ●P.O. Box 989
Laurel Mississippi 39441 ●Phone 601/649-4600
FAX 601/649-0558

SUBJECT: WALK-IN REFRIGERATION		
FOR: HIGHLAND HIGH SCHOOL		
BAKERSFIELD, CA		
DR. BY: JL	CH. BY:	DWG. NO.: Q37787A
DATE: 05/19/2022	SCALE: 3/8"=1'-0"	SHEET NO.: 1 OF 1

NOT TO SCALE

IDENTIFICATION STAMP
DIV. OF THE STATE ARCHITECT
APP: 03-122528 INC:
REVIEWED FOR
SS ☑ FLS ☑ ACS ☑
DATE: 01/06/2025

PTN: 63529-385 FILE: 15-H3

HIGHLAND HIGH SCHOOL
CAFETERIA REHABILITATION AND MODERNIZATION
2900 ROYAL SCOTS WAY
FOR
KERN HIGH SCHOOL DISTRICT
BAKERSFIELD, KERN COUNTY, CALIFORNIA

ARCHITECT SC Inc.
1601 NEW STINE ROAD, SUITE 280
BAKERSFIELD, CA 93309
PH: (661) 397-4377
FAX: (661) 397-4378
WWW.SCARCHITECT.COM

LICENSED ARCHITECT STEPHEN J. CORBIN No. C-16788 REN 11/30/25 STATE OF CALIFORNIA

STEPHEN J. CORBIN, NCARB, AIA, LEED ®-AP

CHECK AND VERIFY ALL DIMENSIONS BEFORE PROCEEDING WITH THE WORK. REPORT DISCREPANCIES TO THE ARCHITECT. ALL CONSTRUCTION SHALL CONFORM TO THE C.B.C.

ricca design STUDIOS
5613 DTC Parkway | Suite 100
Greenwood Village, CO 80111
303.221.0500
www.ricca.com

Foodservice Walk-In Refrigerator Details

MARK	DATE	REVISIONS
1		
2		
3		

JOB NO.: 22075
DRAWN: Ricca
CHECKED: Ricca
DATE: 09/20/2024

QF701-1
20 OF 21 SHEETS

Q37787 B-13

IMPORTANT!

THERMO-KOOL WALK-IN FLOOR PANELS ARE DESIGNED TO WITHSTAND UNIFORMLY DISTRIBUTED STATIONARY LOADS OF 600 LBS. PER SQUARE FOOT. THERMO-KOOL'S WARRANTY DOES NOT COVER DAMAGE DUE TO PALLET JACKS, MOBILE CARTS, MOBILE SHELVING, FORK LIFTS, OR ANY OTHER FORM OF ROLLING TRAFFIC. A CONCRETE WEARING FLOOR MUST BE INSTALLED ON TOP OF THE WALK-IN FLOOR PANELS FOR THIS APPLICATION.

These drawings represent our understanding of the requirements of your order. We submit them to you for the purpose of securing complete approval of sizes, finishes, framing, insulation, dimensions, specifications, and interpretations. The return of these drawings to us with instructions to proceed, or subsequent instructions to that effect, shall constitute complete approval.

Approved by ____________ Date ________

WARNING

DO NOT EXPOSE CARTONED OR STACKED PANELS TO MOISTURE OR HIGH HUMIDITY CONDITIONS DURING STORAGE. STAINING OR OXIDIZING OF METAL SKINS MAY OCCUR.

NOTICE

THIS ORDER CANNOT BE PLACED INTO PRODUCTION UNTIL WE RECEIVE FINAL APPROVED DRAWING AND SPECIFICATIONS. THE DATE OF RECEIPT CAN AFFECT YOUR PROMISED DELIVERY DATE.

THIS THERMO-KOOL WALK-IN WILL BE MANUFACTURED TO UL & NSF REQUIREMENTS. THERMO-KOOL ACCEPTS NO LIABILITY FOR LOCAL CODE REQUIREMENTS OF WHICH THERMO-KOOL HAS NOT BEEN MADE AWARE IN WRITING PRIOR TO FABRICATION.

Thermo-Kool®
WALK-IN PANEL
Thermo-Kool/Mid-South Industries, Inc.
R-14781
BUILDING UNITS
1F68
USA
SURFACE BURNING CHARACTERISTICS

MATERIAL DETAILS	FLAME SPREAD	SMOKE DEVELOPED
ALUMINUM PANELS, PAINTED OR UNPAINTED, 5" OR LESS	15	300-400
GALVANIZED OR STAINLESS STEEL PANELS, PAINTED OR UNPAINTED, 5" OR LESS	20	450-OVER 500
CORE MATERIAL 6" THICK	20	250

PULL DOWN RATE TO 45° F IS UNRESTRICTED. AFTER 45 ° F, PULL DOWN RATE SHOULD BE RESTRICTED TO 10° F PER/ 24 HOUR PERIOD.

NOT APPLICABLE TO BLAST CHILLER CABINETS.

"THERMO-KOOL WALK-IN COOLERS AND FREEZERS COMPLY WITH 2021 INTERNATIONAL ENERGY CONSERVATION CODE (IECC), SECTION C403.11"

Panel Construction:
All panels shall consistof metal pans formed to precise dimensions. Metal finish to be as specified. Insulation shall be "foamed-in-place" urethane foam bonded permanently to the complete inner surfaces of both interior and exterior metal pans to form a strong rigid unit. Each panel shall be 100% urethane foam insulation exclusive of metal pans. Perimeter structure shall be formed of DURATHANE, high-density urethane insulation forming tongues and grooves to assure vapor-proof and airtight joints and to prevent pre-installation damage and deterioration of low-density urethane.

Insulation:
Insulation shall be 4" thick rigid, low ozone depleting HFO Solstice 1233A Class I urethane foam classified according to UL723(ASTM-E-84) as tested by Underwriters Laboratories, Inc. The 4" core material shall have a flame spread of 25 or less and a smoke density of250.

The prefabricated, urethane foam panels shall be supplied with a Class I fire hazard classification according to UL723 (ASTM-E- 84) as tested by Underwriters Laboratories, Inc. Panels shall have a flame spread rating of 25 or less with a certifying Underwriters Laboratories, Inc. label.

- DURATHANE high-density frame combines great strength with high insulation value.
- Insta-Lok panel locks speed set-up.
- Low-density urethane foamed-in-place bonds to metal pans is twice as efficient as other insulation materials.

REVISED

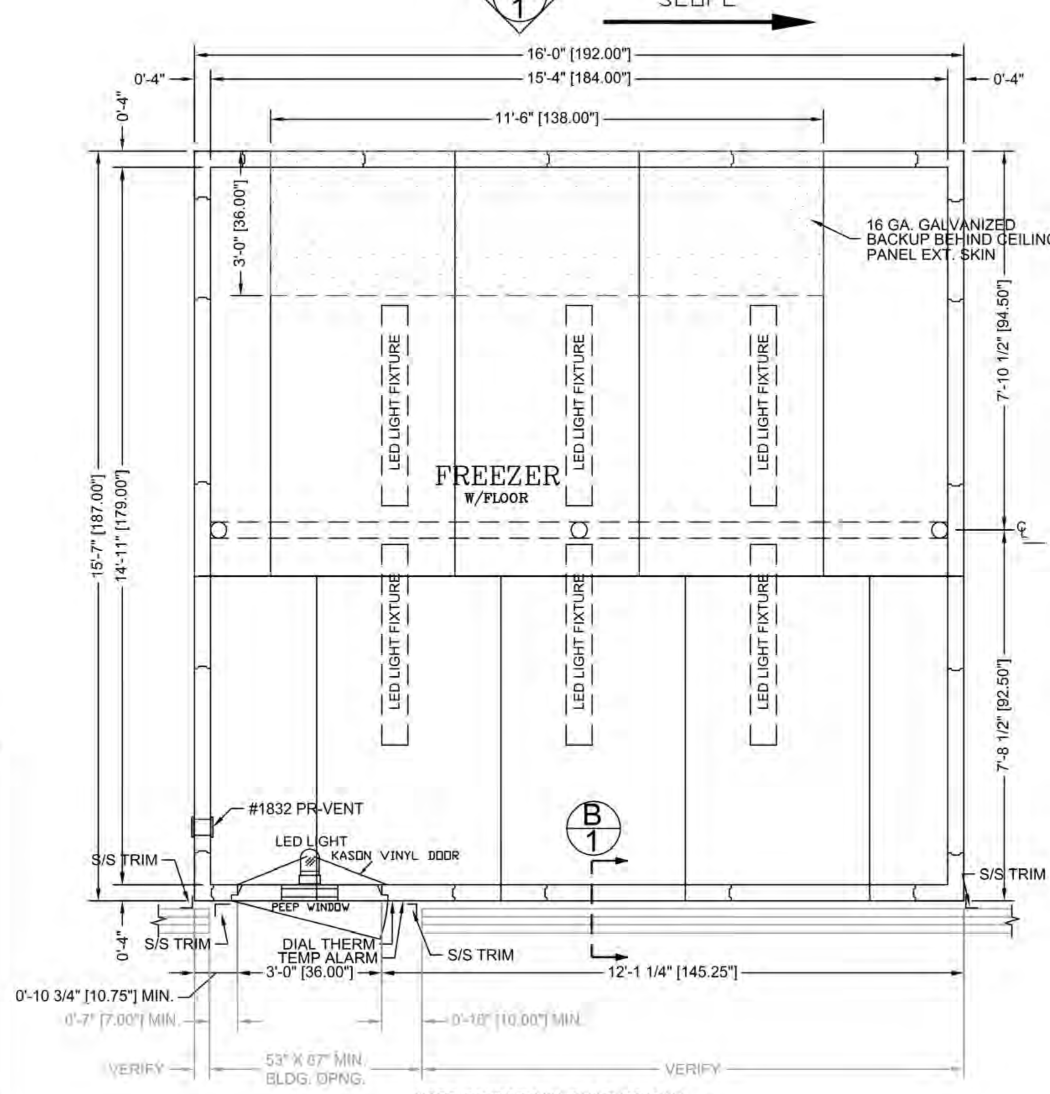

NOTE: 53" X 87" MIN. BUILDING WALL OPENING REQ'D FOR ENTRANCE DOOR WITH 10" MIN. ON LATCH SIDE AND WITH 7" MIN. ON HINGE SIDE OF DOOR.

(CONSULTANT: RICCA DESIGN STUDIOS)

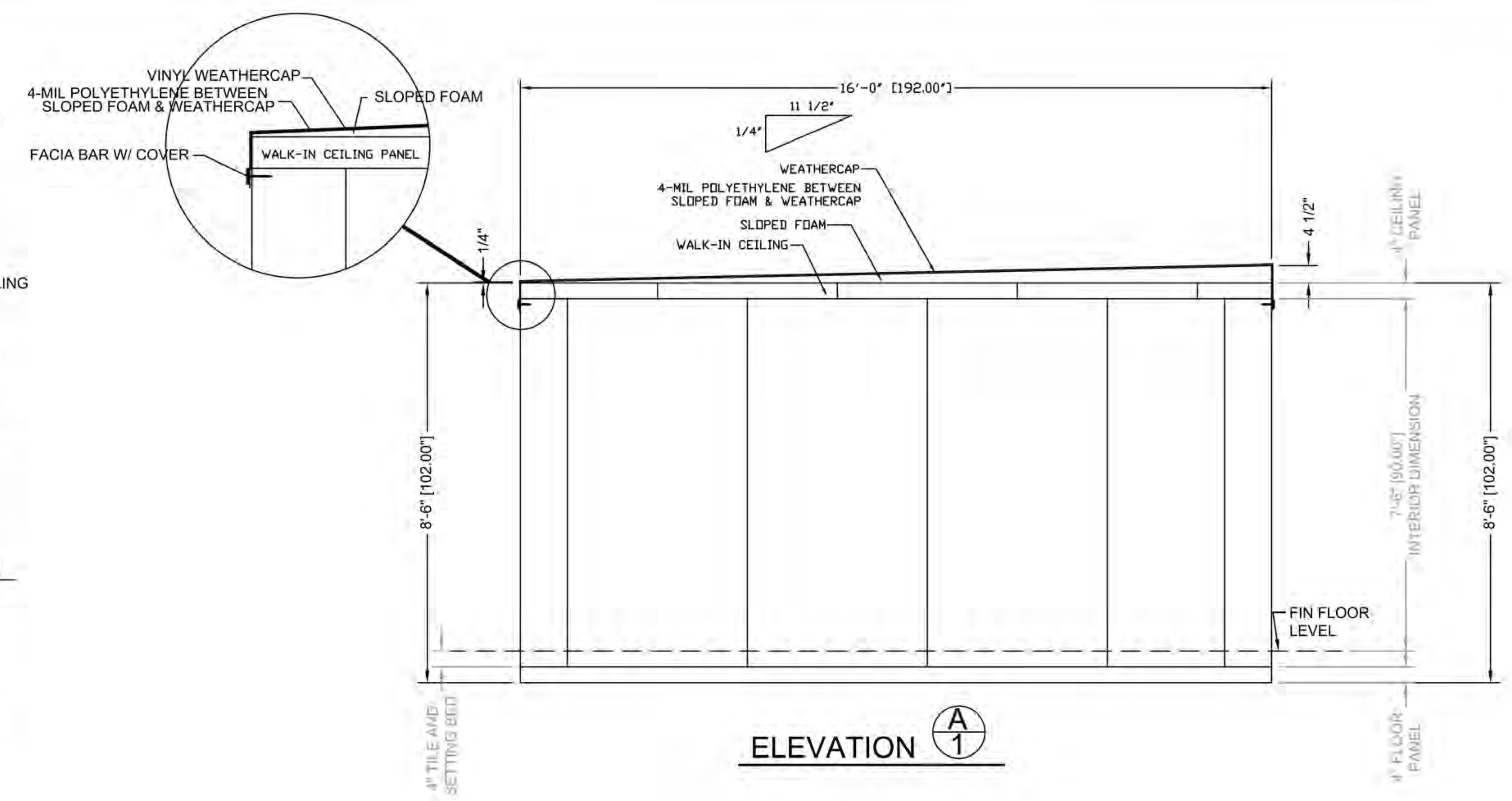

ELEVATION A/1

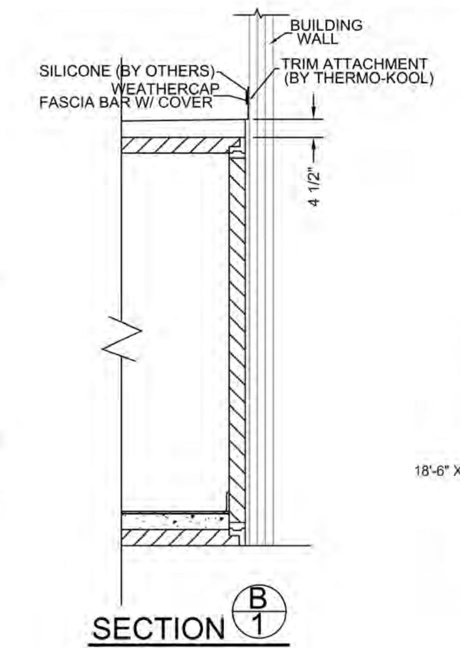

SECTION B/1

NOTE:

INT. BEAM & POST TO BE INSTALLED PRIOR TO THE INSTALLATION OF FINISH FLOOR INSIDE WALK-IN.

VERIFY !!!

* VERIFY ALL DIMENSIONS
* VERIFY HEIGHT AFF FOR TRIM & ENCLOSURES
* VERIFY LOCATION OF BUILDING WALLS
* VERIFY FLOOR DETAIL
* VERIFY LOCATION OF BUMPER RAILS
* VERIFY SIZE OF BUILDING OPENING SIZE(S)
* VERIFY TOTAL DEPTH OF RECESS
* VERIFY HEIGHT A.F.F. FOR BUMPER RAILS

3/8" NYLON GF30 (FU=27KSI) THREADED ROD PER ASTM D638

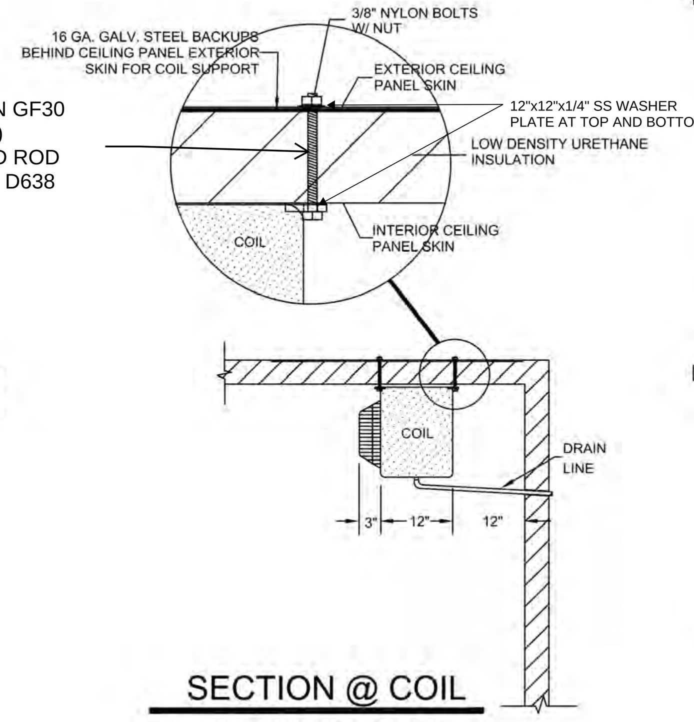

SECTION @ COIL
(W/ 16 GA. GALV. STEEL BACKUPS)

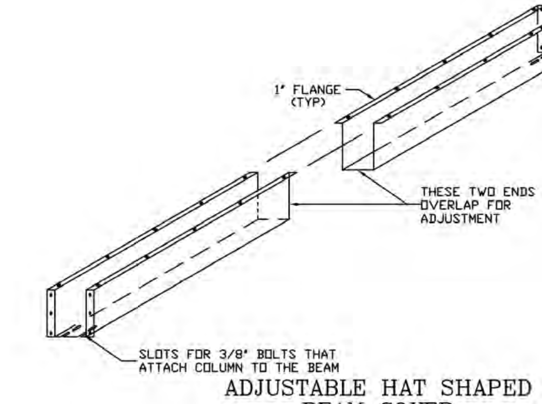

ADJUSTABLE HAT SHAPED BEAM COVER
ISOMETRIC VIEW

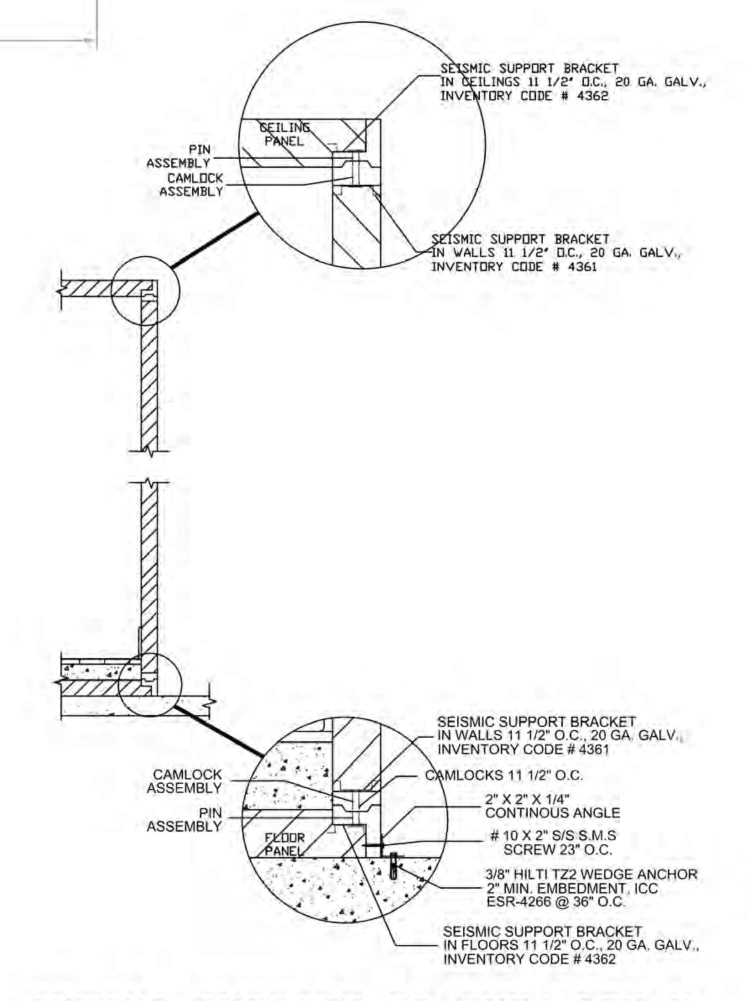

SEISMIC SUPPORT BRACKET DETAIL

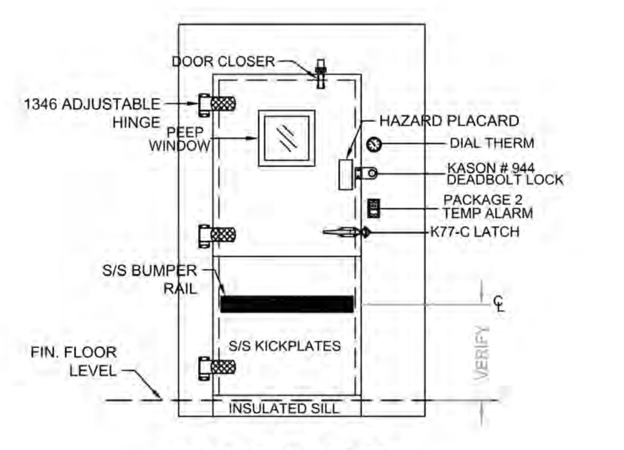

DOOR ELEVATION
DOOR SECTION 4.5 AMPS

NOTE: COVED BASE IS REQ'D FOR NSF INSTALLATION. (BY OTHERS)

THERMO-KOOL WALK-IN FLOOR PANELS ARE DESIGNED TO WITHSTAND UNIFORMLY DISTRIBUTED STATIONARY LOADS OF 600 LBS. PER SQUARE FOOT. THERMO-KOOL'S WARRANTY DOES NOT COVER DAMAGE DUE TO PALLET JACKS, MOBILE CARTS, MOBILE SHELVING, FORK LIFTS, OR ANY OTHER FORM OF ROLLING TRAFFIC. A CONCRETE WEARING FLOOR MUST BE INSTALLED ON TOP OF THE WALK-IN FLOOR PANELS FOR THIS APPLICATION.

* VERIFY TOTAL DEPTH OF RECESS INCLUDING TILE THICKNESS.

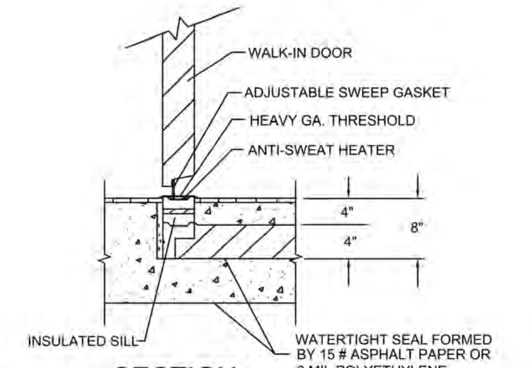

SECTION THRU DOOR

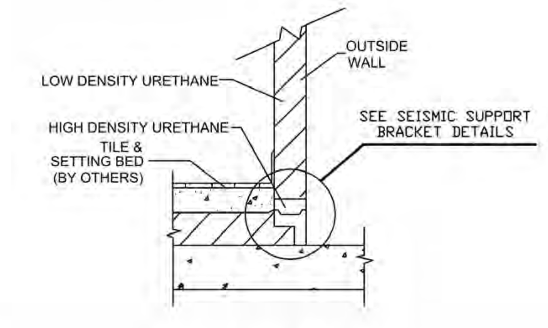

SECTION THRU OUTSIDE WALL

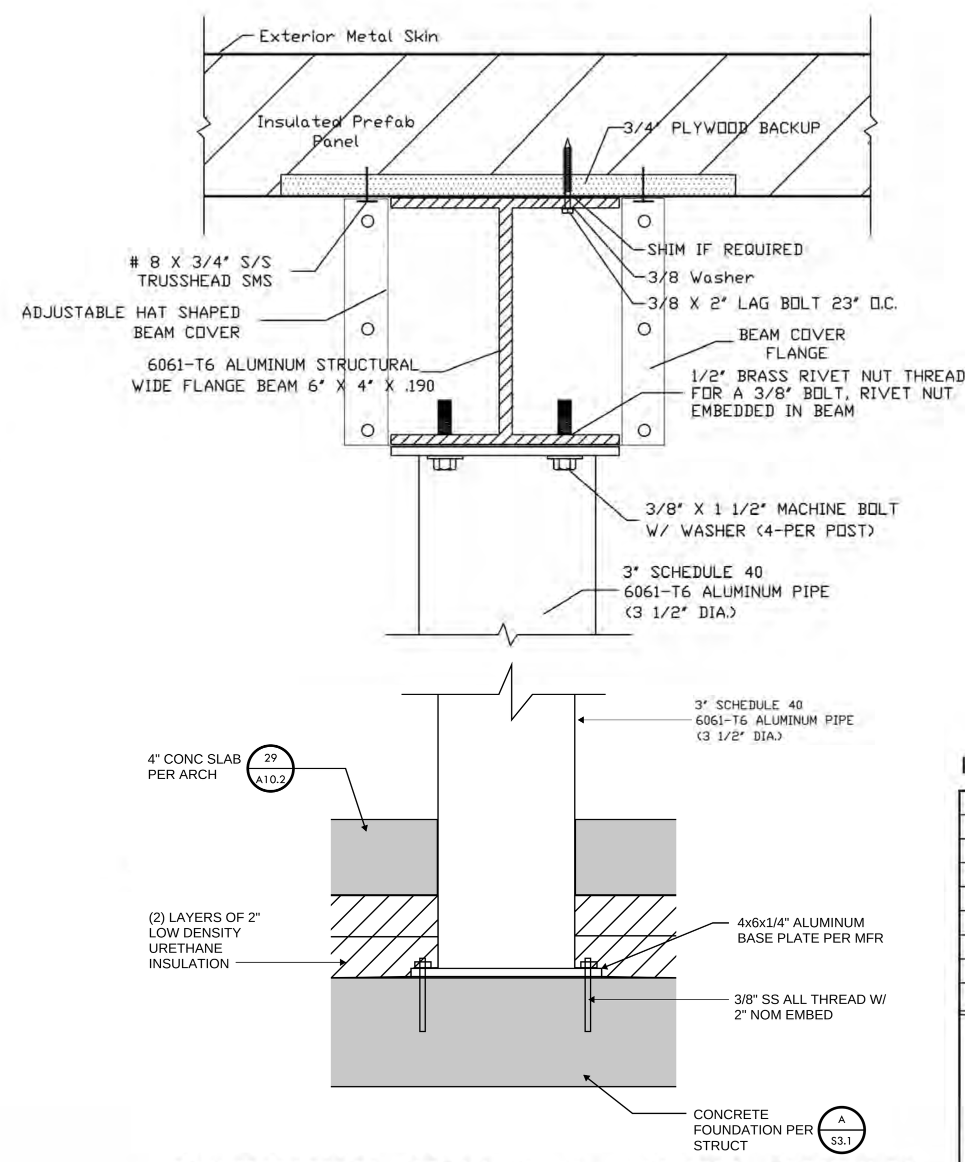

INTERIOR BEAM & POST DETAIL
(INCLUDING ADJUSTABLE BEAM COVER)

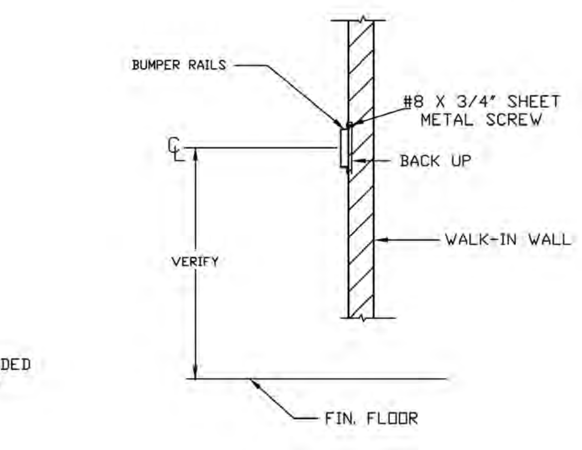

HAT SHAPED BUMPER RAILS

OVERALL DIMENSIONS WIDTH 16'-0" DEPTH 15'-7" HEIGHT 8'-6"

40

FINISH-Exterior
- ☐ 26 Ga. Stucco Embossed Galv. Steel
- ☒ .040 Stucco Aluminum
- ☐ 20 Ga. Type 304 #3 Finish Stainless Steel
- ☐ White Stucco Aluminum
- ☐ White Smooth Aluminum
- ☐ White Stucco Galv.
- ☐ White Smooth Galv.

Interior (walls and ceiling)
- ☐ 26 Ga. Stucco Embossed Galv. Steel
- WALLS ☒ .040 Stucco Aluminum
- ☐ 20 Ga. Type 304 #3 Finish Stainless Steel
- ☐ White Stucco Aluminum
- CEILING ☒ White Smooth Aluminum
- ☐ White Stucco Galv.
- ☐ White Smooth Galv.

FINISH-Interior Floor
- ☐ Built-in by others. (Breaker strip must be under all wall panels including partitions)
  - ☐ 4" x 2" Vinyl U-Channel Screeds ☐ Wall Anchors ☐ 4 1/4" Foam Screeds ☐ 2 1/4" Vinyl Screeds
- ☒ 14 Ga. Bright Galvanized Steel
- ☐ 16 Ga. Stainless Steel.
- ☐ Smooth Aluminum
- ☐ Treadbrite Aluminum Foamed-In-Place

SEE DETAIL BELOW

THERMO-KOOL WALK-IN FLOOR PANELS ARE DESIGNED TO WITHSTAND UNIFORMLY DISTRIBUTED STATIONARY LOADS OF 600 LBS. PER SQUARE FOOT. THERMO-KOOL'S WARRANTY DOES NOT COVER DAMAGE DUE TO PALLET JACKS, MOBILE CARTS, MOBILE SHELVING, FORK LIFTS, OR ANY OTHER FORM OF ROLLING TRAFFIC. A CONC. WEARING FLOOR MUST BE INSTALLED ON TOP OF THE WALK-IN FLOOR PANELS FOR THIS APPLICATION.

SECTION FASTENERS-Thermo-Kool cam type Insta-Lok
INSULATION-4" thickness "Foamed-in-place" urethane-DURATHANE CONSTRUCTION CLASS I

☒ OUTDOOR INSTALLATION
- 18'-6" X 18'-6" ☒ Vinyl weather roof W/ Facia Bar & Cover
- ☒ Sloped Foam ☒ 350 SQ. FT. OF 4-MIL POLYETHYLENE (BETWEEN SLOPED FOAM & VINYL WEATHERCAP)
- ☐ Aluminum weather roof by Thermo-Kool (W/ Weathercap Trim)

☐ INDOOR INSTALLATION

ELECTRICAL-All wiring contained within the door sections is 115/60/1Ø. Connections to this and all other lights and refrigeration supplied by others.
- ☐ UNEXPOSED CONDUIT - Wiring stubs out top of panels 8"
- ☒ EXPOSED CONDUIT - Wiring terminates in a field service box at top of panels

ENTRANCE DOOR-Flush infitting type with poly vinyl magnetic gasket and vinyl sweep gasket on bottom edge. Heater cables are built in around door opening to prevent frost accumulation and sweating. Ext. has a thermometer, indicating light and toggle switch. Interior has vapor proof light. Hinges are cam action type.
* Door finishes will be the same as adjacent panels unless specified otherwise under Door Accessories.

DOOR SIZE & QTY	HARDWARE	SWING
☐ ( ) 34" x 76"	☐ 1238-C LATCH, (2) 1346 PERFORMER ADJUSTABLE HINGES, DOOR CLOSER	☐ RH
☐ ( ) 30" x 76"	☐ 1238-C LATCH, (3) 1346 PERFORMER ADJUSTABLE HINGES, DOOR CLOSER	☒ LH
☒ (1) 36" x 78"	☒ K77-C LATCH W/ 481 SAFETY GLOW PUSH RELEASE, (3) 1346 PERFORMER ADJUSTABLE HINGES, DOOR CLOSER	

☒ DOOR ACCESSORIES
- ☒ (1) 14" x 14" Peep Window(s)W/ HEATED FRAME & GLASS
- ☐ ( ) 14" x 24" Peep Window(s)W/ HEATED FRAME & GLASS

*CENTER VP LIGHT ABOVE DOOR

(1) KASON # 1806 LED LIGHT FIXTURE(S) W/ BULBS ON DOOR FRAME(S)
16 GA. STAINLES STEEL INT/EXT KICKPLATES 36" HIGH
(1) KASON # 944 DEADBOLT LOCK FOR FREEZER
(1) SET(S) OF KASON VINYL DOORS TO FIT A THERMO-KOOL 36" X 78" DOOR
(1) THERMO-KOOL PACKAGE 2 TEMP ALARM/DOOR MONITOR WITH PANIC SWITCH, MOTION DETECTOR, BATTERY BACKUPS, DRY CONTACTS AND THERMOSTATICALLY CONTROLLED HEATER WIRE

NOTE: CONDUIT TO TURN AND RUN UP OUTER EDGE OF DOOR FRAME TO AVOID THE SCREWS COMING IN CONTACT W/ CONDUIT DURING INSTALLATION OF KASON DOOR(S).

NOTE: SJ CABLES TO BE MOUNTED ON EXTERIOR SIDE OF DOORS & FRAMES.

☒ MISCELLANEOUS EQUIPMENT
- ☐ ( ) Lights (NOT MOUNTED) 1 AMP EACH
- ☐ Interior Floor Ramp
- ☐ Exterior Floor Ramp
- ☐ # 1825 Heated Pressure Relief Vent .5 AMPS EACH
- ☐ # 1830 Heated Pressure Relief Vent (UNHEATED)
- ☒ (1) # 1832-4 Heated Pressure Relief Vent .5 AMPS EACH
- S/S ☐ Trim & Enclosures (see detail)

(6) 48" LED LIGHT FIXTURE(S) W/ BULBS (.4 AMPS)
(1) SEISMIC SUPPORT PACKAGE (SEE DETAIL)
(1) ROW OF HAT-SHAPED S/S BUMPER RAILS ON EXTERIOR AS SHOWN (SHIPPED LOOSE)(SEE DETAIL)
(1) CEILING & FLOOR SPLICE
(1) INTERIOR BEAM & POST SUPPORT (SEE DETAIL)
(1) 3" X 3" STAINLESS STEEL HORIZONTAL ANGLE TRIM 8'-6" LONG
(4) 3" X 3" STAINLESS STEEL VERTICAL ANGLE TRIM 8'-6" LONG

REINFORCED CEILING PANELS AT COIL LOCATIONS (REFRIGERATION BY OTHERS)

REFRIGERATION- ☐ Aircooled ☐ Watercooled ☒ By Others

NOTE: IF REFRIGERATION IS NOT SUPPLIED WITH WALK-IN, BASED ON AN AMBIENT OF 100 DEGREES F, FOR NSF APPLICATIONS AT STANDARD HOLDING TEMPERATURES FOR A FREZER THE BTU RATING SHALL BE 16,932.

ITEM # A64

NOTE: THERMO-KOOL recommends a 1" min. clearance between walk-in & building walls.

BCAD

DATE	REV. BY	REVISIONS DESCRIPTION
07/13/2022	JL	CHANGE WALK-IN TO BE OUTDOORS; ADD VINYL WEATHERCAP & FASCIA BAR;DELETE ENCL. PANELS
08/23/2022	JL	ADD COVED BASE NOTE TO FLOOR DETAIL(S)
12/18/2023	JL	ADD REINFORCED CEILING PANELS @ COIL LOATIONS; CHNG DOOR CLOSER
4/16/2024	LC	UPDATE DIMS ON ELEVATION; UPDATE DWG. NUMBER.
9-11-24	DW	ADDED VARIOUS DETAILS & NOTES.

NOTE: THIS DRAWING, AND ALL DRAWINGS OR SPECIFICATIONS SUBMITTED BY THERMO-KOOL, AND REPRODUCTIONS THEREOF IN WHOLE OR IN PART SHALL REMAIN THE LEGAL PROPERTY OF MID-SOUTH INDUSTRIES, INC., SUBJECT TO RECALL AT ANY TIME AND SHALL NOT BE USED FOR INSTALLATIONS OR PRODUCTION BY OTHERS EXCEPT BY OUR SPECIAL PERMISSION IN WRITING.

Walk-in panels manufactured under Patent # 5,424,118.

Thermo-Kool®
Mid-South Industries, Inc. ●P.O. Box 989
Laurel Mississippi 39441 ●Phone 601/649-4600
FAX 601/649-0558

SUBJECT	WALK-IN REFRIGERATION
FOR	HIGHLAND HIGH SCHOOL, BAKERSFIELD, CA
DR. BY	JL
CH. BY	
DWG. NO.	Q37787 B-13
DATE	05/19/2022
SCALE	3/8"=1'-0"
SHEET NO.	1 OF 1

IDENTIFICATION STAMP
DIV. OF THE STATE ARCHITECT
APP: 03-122528 INC:
REVIEWED FOR
SS ☑ FLS ☑ ACS ☑
DATE: 01/06/2025

PTN: 63529-385 FILE: 15-H3

HIGHLAND HIGH SCHOOL

CAFETERIA REHABILITATION AND MODERNIZATION
2900 ROYAL SCOTS WAY
FOR
KERN HIGH SCHOOL DISTRICT
BAKERSFIELD, KERN COUNTY, CALIFORNIA

SC ARCHITECT INC.
1601 NEW STINE ROAD, SUITE 280
BAKERSFIELD, CA 93309
PH: (661) 397-4377
FAX: (661) 397-4378
WWW.SCARCHITECT.COM

STEPHEN J. CORBIN, NCARB, AIA, LEED ®AP

CHECK AND VERIFY ALL DIMENSIONS BEFORE PROCEEDING WITH THE WORK. REPORT DISCREPANCIES TO THE ARCHITECT. ALL CONSTRUCTION SHALL CONFORM TO THE C.B.C.

ricca design studios
5613 DTC Parkway | Suite 100
Greenwood Village, CO 80111
303.221.0500
www.ricca.com

Foodservice Walk-In Freezer Details

MARK	DATE	REVISIONS
1		
2		
3		

JOB NO. 22075
DRAWN: Ricca
CHECKED: Ricca
DATE: 09/20/2024

QF701-2
21 OF 21 SHEETS

NOT TO SCALE