HMC ARCHITECTS
3546 Concours Street
Ontario, California 91764

November 30, 2023

Arvin High School ESSER III Phase 1 Roofing
Kern High School District
HMC # 3566002103
File No: 15-H3 A#03-122508

The following changes, additions, deletions, or corrections shall become a part of the Contract Documents for the project named above and all other conditions shall remain the same. The bidders shall be responsible for transmitting this information to all affected subcontractors and suppliers prior to the closing of bids. Acknowledge receipt of this Addendum in spaces provided on the Bid Form. Failure to acknowledge will subject Bidder to disqualification.

GENERAL NOTE:

Item No. AD-3.1:

A. No drawings change, no specification change. ADD notes to reflect RFI #Bid-4 – Insulation Clarification, RFI #Bid-5 – Building Confirmations, RFI #Bid-6 – Cant Strips, RFI #Bid-7 – Building Structured, RFI #Bid-8 – Vented Base Sheet, RFI #Bid-9 – PVC Clad Metal and Cant Strip, RFI #Bid-10 – Insulation, RFI #Bid-11 – Asbestos, and RFI #Bid-12 – Downspouts Refer to details in supporting documents.

SPECIFICATIONS

Item No. AD-3.2: Reference Revised Sections

A. The following revised specification sections are hereby issued:

Section 07 54 19 Polyvinyl-Chloride (PVC) Roofing

1) DELETE item on 2.04 – Auxiliary Roofing Material, item G as shown and clouded per Delta 3.

DRAWINGS:

Item No. AD-3.3: Reference Revised Drawings

A. The following revised drawings are hereby issued:

Architectural

A4.21 BLDG 1A/1B & 1C - ROOF PLAN - REMODEL

1.) ADD keynote 07.44 and 07.46 as shown and clouded per Delta 3.

A4.40 **BLDG 5B & 7B - ROOF PLAN - DEMO & REMODEL**

1.) ADD keynote 07.44 and 07.46 as shown and clouded per Delta 3.

A10.40 **Roof Details**

1.) DELETE cant strip as shown and clouded per Delta 3.
2.) MODIFY PVC Coated metal flashing to Adhered PVC Flashing Membrane on Detail 8, 9, 10, 14, 19, 21 & 23 as shown and clouded per Delta 3.

A10.41 **Roof Details**

1.) DELETE cant strip as shown and clouded per Delta 3.
2.) MODIFY PVC Coated metal flashing to Adhered PVC Flashing Membrane on Detail 2, 17, 18, 21 and 22/A10.41 as shown and clouded per Delta 3.

SECTION 07 54 19 - POLYVINYL-CHLORIDE (PVC) ROOFING

PART 1 - GENERAL

1.01 SUMMARY

A. Section Includes: Polyvinyl-chloride roofing membrane assembly including the following:
   1. Adhered polyvinyl chloride (PVC) roofing system.
   2. Air barrier / vapor retarder.
   3. Roof insulation.
   4. Cover board.
   5. Walkways.

B. Related Sections:
   1. Division 01 sustainable design requirements Section(s) for supplementary sustainable design criteria.
   2. Division 06 Sections for wood nailers, curbs, and blocking.
   3. Division 06 Sections for wood-based, structural-use roof deck panels.
   4. Division 22 Sections for roof drains.

1.02 DEFINITIONS

A. Roofing Terminology: Definitions in ASTM D1079 and glossary in NRCA's "The NRCA Roofing Manual: Membrane Roof Systems" apply to Work of this Section.

1.03 PREINSTALLATION MEETINGS

A. Preinstallation Roofing Conference: Conduct conference at Project site.
   1. Meet with Owner, Architect,Owner's insurer if applicable, testing and inspecting agency representative, roofing Installer, roofing system manufacturer's representative, deck Installer, air barrier Installer, and installers whose work interfaces with or affects roofing, including installers of roof accessories and roof-mounted equipment.
   2. Review methods and procedures related to roofing installation, including manufacturer's written instructions.
   3. Review and finalize construction schedule, and verify availability of materials, Installer's personnel, equipment, and facilities needed to make progress and avoid delays.
   4. Examine deck substrate conditions and finishes for compliance with requirements, including flatness and fastening.
   5. Review structural loading limitations of roof deck during and after roofing.
   6. Review base flashings, special roofing details, roof drainage, roof penetrations, equipment curbs, and condition of other construction that affects roofing system.

MasterSpec Copyright © 2023 by the American Institute of Architects, portions Copyright © 2023 by HMC Architects for KHSD Arvin HS ESSER III Phase I Roofing Project..
Warning: This AIA MasterSpec based document is protected by U.S. Copyright Law and International Treaties.

7. Review governing regulations and requirements for insurance and certificates if applicable.
8. Review temporary protection requirements for roofing system during and after installation.
9. Review roof observation and repair procedures after roofing installation.

1.04 ACTION SUBMITTALS

A. Product Data: For each type of product.

B. Shop Drawings: Include roof plans, sections, details, and attachments to other work, including the following:
1. Layout and thickness of insulation.
2. Flashings and membrane termination details.
3. Flashing details at penetrations.
4. Tapered insulation layout, thickness, and slopes.
5. Insulation fastening patterns for corner, perimeter, and field-of-roof locations.

C. Wind Uplift Resistance Submittal: For roofing system, indicating compliance with wind uplift performance requirements.

1.05 INFORMATIONAL SUBMITTALS

A. Sustainable Design Submittals:
1. Documentation for adhesives, indicating VOC content.
2. Documentation indicating roofing complies with solar reflectance requirements.

B. Manufacturer Certificates:
1. Performance Requirement Certificate: Signed by roof membrane manufacturer, certifying that roofing system complies with requirements specified in "Performance Requirements" Article.
   a. Submit evidence of compliance with performance requirements.
2. Special Warranty Certificate: Signed by roof membrane manufacturer, certifying that all materials supplied under this Section are acceptable for special warranty.

C. Product Test Reports: For roof membrane and insulation, for tests performed by a qualified testing agency, indicating compliance with specified requirements.

D. Field Test Reports:
1. Fastener-pullout test results and manufacturer's revised requirements for fastener patterns.

E. Field quality-control reports.

F. Sample Warranties: For manufacturer's special warranties.

MasterSpec Copyright © 2023 by the American Institute of Architects, portions Copyright © 2023 by HMC Architects for KHSD Arvin HS ESSER III Phase I Roofing Project..
Warning: This AIA MasterSpec based document is protected by U.S. Copyright Law and International Treaties.

1.06 CLOSEOUT SUBMITTALS

A. Maintenance Data: For roofing system to include in maintenance manuals.

B. Certified statement from existing roof membrane manufacturer stating that existing roof warranty has not been affected by Work performed under this Section.

1.07 QUALITY ASSURANCE

A. Installer Qualifications: A qualified firm that is approved, authorized, or licensed by roofing system manufacturer to install manufacturer's product and that is eligible to receive manufacturer's special warranty.

1.08 DELIVERY, STORAGE, AND HANDLING

A. Deliver roofing materials to Project site in original containers with seals unbroken and labeled with manufacturer's name, product brand name and type, date of manufacture, approval or listing agency markings, and directions for storing and mixing with other components.

B. Store liquid materials in their original undamaged containers in a clean, dry, protected location and within the temperature range required by roofing system manufacturer. Protect stored liquid material from direct sunlight.
   1. Discard and legally dispose of liquid material that cannot be applied within its stated shelf life.

C. Protect roof insulation materials from physical damage and from deterioration by sunlight, moisture, soiling, and other sources. Store in a dry location. Comply with insulation manufacturer's written instructions for handling, storing, and protecting during installation.

D. Handle and store roofing materials, and place equipment in a manner to avoid permanent deflection of deck.

1.09 FIELD CONDITIONS

A. Weather Limitations: Proceed with installation only when existing and forecasted weather conditions permit roofing system to be installed according to manufacturer's written instructions and warranty requirements.

1.10 WARRANTY

A. Special Warranty: Manufacturer agrees to repair or replace components of roofing system that fail in materials or workmanship within specified warranty period.

MasterSpec Copyright © 2023 by the American Institute of Architects, portions Copyright © 2023 by HMC Architects for KHSD Arvin HS ESSER III Phase I Roofing Project..
Warning: This AIA MasterSpec based document is protected by U.S. Copyright Law and International Treaties.

1. Special warranty includes roof membrane, base flashings, roof insulation, fasteners, cover boards, air barrier / vapor retarder, and other components of roofing system.
2. Warranty Period: 20 years from date of Substantial Completion.

PART 2 - PRODUCTS

2.01 SUSTAINABLE DESIGN CRITERIA

A. Sustainable Design Criteria: Comply with indicated criteria for the following product categories:
   1. Adhesives:
      a. VOC content limits for field applications.
   2. Sealants:
      a. VOC content limits for field applications.

2.02 PERFORMANCE REQUIREMENTS

A. General Performance: Installed roofing system and flashings shall withstand specified uplift pressures, thermally induced movement, and exposure to weather without failure due to defective manufacture, fabrication, installation, or other defects in construction. Roof system and flashings shall remain watertight.
   1. Accelerated Weathering: Roof membrane shall withstand 2000 hours of exposure when tested according to ASTM G152, ASTM G154, or ASTM G155.
   2. Impact Resistance: Roof membrane shall resist impact damage when tested according to ASTM D3746, ASTM D4272, or the "Resistance to Foot Traffic Test" in FM Approvals 4470.

B. Material Compatibility: Roofing materials shall be compatible with one another and adjacent materials under conditions of service and application required, as demonstrated by roof membrane manufacturer based on testing and field experience.

C. Wind Uplift Resistance: Design roofing system to resist the following wind uplift pressures when tested according to FM Approvals 4474, UL 580, or UL 1897:
   1. Building 9A:
      a. Zone 1' (Center Roof Area Field): 31 lbf/sq. ft.
      b. Zone 1 (Roof Area Field): 53 lbf/sq. ft.
      c. Zone 2 (Roof Area Perimeter): 70 lbf/sq. ft.
         1) Location: From roof edge to 0.6h inside roof edge.
      d. Zone 3 (Roof Area Corners): 95 lbf/sq. ft.
         1) Location: 0.2h deep by 0.6h long in each direction from building corner.
   2. All Other Buildings:
      a. Zone 1' (Center Roof Area Field): 28 lbf/sq. ft.
      b. Zone 1 (Roof Area Field): 49 lbf/sq. ft.
      c. Zone 2 (Roof Area Perimeter): 65 lbf/sq. ft.

MasterSpec Copyright © 2023 by the American Institute of Architects, portions Copyright © 2023 by HMC Architects for KHSD Arvin HS ESSER III Phase I Roofing Project..
Warning: This AIA MasterSpec based document is protected by U.S. Copyright Law and International Treaties.

1) Location: From roof edge to 0.6h inside roof edge.

d. Zone 3 (Roof Area Corners): 88 lbf/sq. ft.

1) Location: 0.2h deep by 0.6h long in each direction from building corner.

D. Solar Reflectance Index: Not less than 75 when calculated according to ASTM E1980, based on testing identical products by a qualified testing agency.

E. Exterior Fire-Test Exposure: ASTM E108 or UL 790, Class A; for application and roof slopes indicated; testing by a qualified testing agency. Identify products with appropriate markings of applicable testing agency.

2.03 POLYVINYL CHLORIDE (PVC) ROOFING

A. PVC Sheet: ASTM D4434/D4434M, Type II, glass-fiber reinforced, felt backed.

1. Manufacturers: Subject to compliance with requirements, available manufacturers and products that may be incorporated into the Work include, but are not limited to, the following:
   a. Sika Sarnafil G410.
2. Thickness: 60 mils.
3. Exposed Face Color: White.

B. Source Limitations: Obtain components for roofing system from roof membrane manufacturer or manufacturers approved by roof membrane manufacturer.

2.04 AUXILIARY ROOFING MATERIALS

A. General: Auxiliary materials recommended by roofing system manufacturer for intended use and compatible with other roofing components.

1. Adhesive and Sealants: Comply with VOC limits of authorities having jurisdiction.

B. Sheet Flashing: Manufacturer's standard unreinforced PVC sheet flashing, 55 mils thick, minimum, of same color as PVC sheet.

C. PVC-Coated Sheet Metal Flashing: Manufacturer's standard unreinforced PVC-coated, galvanized steel sheet flashing, 0,024 inch thick, of same color as PVC sheet.

D. Liquid-Applied Flashing: Manufacturer's standard reinforced flashing, 80 mils thick, minimum.

E. Prefabricated Pipe Flashings: As recommended by roof membrane manufacturer.

F. Bonding Adhesive: Manufacturer's standard.

MasterSpec Copyright © 2023 by the American Institute of Architects, portions Copyright © 2023 by HMC Architects for KHSD Arvin HS ESSER III Phase I Roofing Project..
Warning: This AIA MasterSpec based document is protected by U.S. Copyright Law and International Treaties.

3

~~G. Vented Base Sheet: ASTM D4897/D4897M, Type II; nonperforated, asphalt-impregnated fiberglass reinforced, with mineral granular patterned surfacing on bottom surface.~~

~~H.~~G. Metal Termination Bars: Manufacturer's standard, predrilled stainless steel or aluminum bars, approximately 1 by 1/8 inch thick; with anchors.

~~I.~~H. Fasteners: Factory-coated steel fasteners and metal or plastic plates complying with corrosion-resistance provisions in FM Approvals 4470, designed for fastening roofing components to substrate, and acceptable to roofing system manufacturer.

~~J.~~I. Miscellaneous Accessories: Provide preformed cone and vent sheet flashings, preformed inside and outside corner sheet flashings, T-joint covers, lap sealants, termination reglets, and other accessories.

2.05 AIR BARRIER / VAPOR RETARDER

A. Sheet Air Barrier / Vapor Retarder: Manufacturer's recommended sheet product, minimum 15-mil-total thickness; self-adhering, cold adhesive applied, or torch applied, with slip-resisting surface compatible with adhered insulation and release paper backing. Provide primer when recommended by manufacturer.
   1. Mastic: Type recommended by manufacturer for sealing around penetrations and at terminations in air barrier / vapor retarder.

2.06 ROOF INSULATION

A. General: Preformed roof insulation boards manufactured or approved by PVC roof membrane manufacturer.

B. Polyisocyanurate Board Insulation: ASTM C1289, Type II, Class 1, Grade 2, felt or glass-fiber mat facer on both major surfaces.
   1. Compressive Strength: 20 psi minimum.

C. Tapered Insulation: Provide factory-tapered insulation boards.
   1. Material: Match roof insulation.
   2. Minimum Thickness: 1/4 inch.
   3. Slope:
      a. Roof Field: 1/4 inch per foot unless otherwise indicated on Drawings.
      b. Saddles and Crickets: 1/2 inch per foot unless otherwise indicated on Drawings.

2.07 INSULATION ACCESSORIES

A. General: Roof insulation accessories recommended by insulation manufacturer for intended use and compatibility with other roofing system components.

MasterSpec Copyright © 2023 by the American Institute of Architects, portions Copyright © 2023 by HMC Architects for KHSD Arvin HS ESSER III Phase I Roofing Project..
Warning: This AIA MasterSpec based document is protected by U.S. Copyright Law and International Treaties.

B. Fasteners: Factory-coated steel fasteners with metal or plastic plates complying with corrosion-resistance provisions in FM Approvals 4470, designed for fastening roof insulation to substrate, and acceptable to roofing system manufacturer.

C. Insulation Adhesive: Insulation manufacturer's recommended adhesive formulated to attach roof insulation to substrate or to another insulation layer as follows:
   1. Modified asphaltic, asbestos-free, cold-applied adhesive.
   2. Bead-applied, low-rise, one-component or multicomponent urethane adhesive.
   3. Full-spread, spray-applied, low-rise, two-component urethane adhesive.

D. Cover Board: ASTM C1177/C1177M, glass-mat, water-resistant gypsum board or ASTM C1278/C1278M fiber-reinforced gypsum board.
   1. Thickness: 1/2 inch.
   2. Surface Finish: Factory primed or unprimed as recommended by roofing membrane manufacturer.

2.08 WALKWAYS

A. Flexible Walkways: Factory-formed, nonporous, heavy-duty, slip-resisting, surface-textured walkway pads or rolls, approximately 3/16 inch thick and acceptable to roofing system manufacturer.

PART 3 - EXECUTION

3.01 EXAMINATION

A. Examine substrates, areas, and conditions, with Installer present, for compliance with requirements and other conditions affecting performance of the Work.
   1. Verify that roof openings and penetrations are in place, curbs are set and braced, and roof-drain bodies are securely clamped in place.
   2. Verify that wood blocking, curbs, and nailers are securely anchored to roof deck at penetrations and terminations and that nailers match thicknesses of insulation.
   3. Verify that surface plane flatness and fastening of steel roof deck complies with requirements in Section 05 31 00 "Steel Decking."
   4. Verify that minimum concrete drying period recommended by roofing system manufacturer has passed.
   5. Verify that concrete substrate is visibly dry and free of moisture, and that minimum concrete internal relative humidity is not more than [75] <Insert number> percent, or as recommended by roofing system manufacturer, when tested according to ASTM F2170.
      a. Test Frequency: One test probe per each [1000 sq. ft.] <Insert area>, or portion thereof, of roof deck, with not less than three tests probes.
      b. Submit test reports within 24 hours after performing tests.
   6. Verify that concrete-curing compounds that will impair adhesion of roofing components to roof deck have been removed.

MasterSpec Copyright © 2023 by the American Institute of Architects, portions Copyright © 2023 by HMC Architects for KHSD Arvin HS ESSER III Phase I Roofing Project..
Warning: This AIA MasterSpec based document is protected by U.S. Copyright Law and International Treaties.

7. Verify that joints in precast concrete roof decks have been grouted flush with top of concrete.
8. Verify that minimum curing period recommended by roofing system manufacturer for lightweight insulating concrete roof decks has passed.
9. Verify any damaged sections of cementitious wood-fiber decks have been repaired or replaced.
10. Verify adjacent cementitious wood-fiber panels are vertically aligned to within 1/8 inch at top surface.

B. Proceed with installation only after unsatisfactory conditions have been corrected.

3.02 PREPARATION

A. Clean substrate of dust, debris, moisture, and other substances detrimental to roofing system installation according to roofing system manufacturer's written instructions. Remove sharp projections.

B. Prevent materials from entering and clogging roof drains and conductors and from spilling or migrating onto surfaces of other construction. Remove roof-drain plugs when no work is taking place or when rain is forecast.

C. Perform fastener-pullout tests according to roof system manufacturer's written instructions.
1. Submit test result within 24 hours after performing tests.
a. Include manufacturer's requirements for any revision to previously submitted fastener patterns required to achieve specified wind uplift requirements.

3.03 INSTALLATION OF ROOFING, GENERAL

A. Install roofing system according to roofing system manufacturer's written instructions, SPRI's Directory of Roof Assemblies listed roof assembly requirements, and FM Global Property Loss Prevention Data Sheet 1-29.

B. Complete terminations and base flashings and provide temporary seals to prevent water from entering completed sections of roofing system at end of workday or when rain is forecast. Remove and discard temporary seals before beginning Work on adjoining roofing.

C. Install roof membrane and auxiliary materials to tie in to existing roofing to maintain weathertightness of transition.

MasterSpec Copyright © 2023 by the American Institute of Architects, portions Copyright © 2023 by HMC Architects for KHSD Arvin HS ESSER III Phase I Roofing Project..
Warning: This AIA MasterSpec based document is protected by U.S. Copyright Law and International Treaties.

3.04 INSTALLATION OF AIR BARRIER / VAPOR RETARDER

A. Self-Adhering-Sheet: Prime substrate if required by manufacturer. Install sheet over area to receive air barrier / vapor retarder, side and end lapping each sheet a minimum of 3-1/2 and 6 inches, respectively.
   1. Extend vertically up parapet walls and projections to a minimum height equal to height of insulation and cover board.
   2. Seal laps by rolling.

B. Completely seal air barrier / vapor retarder at terminations, obstructions, and penetrations to prevent air movement into roofing system.

3.05 INSTALLATION OF INSULATION

A. Coordinate installing roofing system components so insulation is not exposed to precipitation or left exposed at end of workday.

B. Comply with roofing system and roof insulation manufacturer's written instructions for installing roof insulation.

C. Installation Over Wood Decking:
   1. Install base layer of insulation with end joints staggered not less than 12 inches in adjacent rows.
      a. Trim insulation neatly to fit around penetrations and projections, and to fit tight to intersecting sloping roof decks.
      b. Make joints between adjacent insulation boards not more than 1/4 inch in width.
      c. At internal roof drains, slope insulation to create a square drain sump with each side equal to the diameter of the drain bowl plus 24 inches.
         1) Trim insulation so that water flow is unrestricted.
      d. Fill gaps exceeding 1/4 inch with insulation.
      e. Cut and fit insulation within 1/4 inch of nailers, projections, and penetrations.
      f. Loosely lay base layer of insulation units over substrate.
   2. Mechanically attach base layer of insulation using mechanical fasteners specifically designed and sized for fastening specified board-type roof insulation to wood decks.
      a. Fasten insulation according to requirements in SPRI's Directory of Roof Assemblies for specified Wind Uplift Load Capacity.
      b. Fasten insulation to resist specified uplift pressure at corners, perimeter, and field of roof.
   3. Install upper layers of insulation and tapered insulation with joints of each layer offset not less than 12 inches from previous layer of insulation.
      a. Install with long joints continuous and with end joints staggered not less than 12 inches in adjacent rows.

MasterSpec Copyright © 2023 by the American Institute of Architects, portions Copyright © 2023 by HMC Architects for KHSD Arvin HS ESSER III Phase I Roofing Project..
Warning: This AIA MasterSpec based document is protected by U.S. Copyright Law and International Treaties.

b. Trim insulation neatly to fit around penetrations and projections, and to fit tight to intersecting sloping roof decks.
c. Make joints between adjacent insulation boards not more than 1/4 inch in width.
d. At internal roof drains, slope insulation to create a square drain sump with each side equal to the diameter of the drain bowl plus 24 inches.
    1) Trim insulation so that water flow is unrestricted.
e. Fill gaps exceeding 1/4 inch with insulation.
f. Cut and fit insulation within 1/4 inch of nailers, projections, and penetrations.
g. Loosely lay each layer of insulation units over substrate.
h. Adhere each layer of insulation to substrate using adhesive according to SPRI's Directory of Roof Assemblies listed roof assembly requirements for specified Wind Uplift Load Capacity and FM Global Property Loss Prevention Data Sheet 1-29, as follows:
    1) Set each layer of insulation in ribbons of bead-applied insulation adhesive, firmly pressing and maintaining insulation in place.

D. Installation Over Concrete Decks:
1. Install base layer of insulation with end joints staggered not less than 12 inches in adjacent rows.
    a. Where installing composite and noncomposite insulation in two or more layers, install noncomposite board insulation for bottom layer and intermediate layers, if applicable, and install composite board insulation for top layer.
    b. Trim insulation neatly to fit around penetrations and projections, and to fit tight to intersecting sloping roof decks.
    c. Make joints between adjacent insulation boards not more than 1/4 inch in width.
    d. At internal roof drains, slope insulation to create a square drain sump with each side equal to the diameter of the drain bowl plus 24 inches.
        1) Trim insulation so that water flow is unrestricted.
    e. Fill gaps exceeding 1/4 inch with insulation.
    f. Cut and fit insulation within 1/4 inch of nailers, projections, and penetrations.
    g. Loosely lay base layer of insulation units over substrate.
    h. Adhere base layer of insulation to vapor retarder according to SPRI's Directory of Roof Assemblies listed roof assembly requirements for specified Wind Uplift Load Capacity and FM Global Property Loss Prevention Data Sheet 1-29, as follows:
        1) Set insulation in ribbons of bead-applied insulation adhesive, firmly pressing and maintaining insulation in place.
2. Install upper layers of insulation and tapered insulation with joints of each layer offset not less than 12 inches from previous layer of insulation.
    a. Install with long joints continuous and with end joints staggered not less than 12 inches in adjacent rows.

MasterSpec Copyright © 2023 by the American Institute of Architects, portions Copyright © 2023 by HMC Architects for KHSD Arvin HS ESSER III Phase I Roofing Project..
Warning: This AIA MasterSpec based document is protected by U.S. Copyright Law and International Treaties.

b. Trim insulation neatly to fit around penetrations and projections, and to fit tight to intersecting sloping roof decks.
c. Make joints between adjacent insulation boards not more than 1/4 inch in width.
d. At internal roof drains, slope insulation to create a square drain sump with each side equal to the diameter of the drain bowl plus 24 inches.
    1) Trim insulation so that water flow is unrestricted.
e. Fill gaps exceeding 1/4 inch with insulation.
f. Cut and fit insulation within 1/4 inch of nailers, projections, and penetrations.
g. Loosely lay each layer of insulation units over substrate.
h. Adhere each layer of insulation to substrate using adhesive according to SPRI's Directory of Roof Assemblies listed roof assembly requirements for specified Wind Uplift Load Capacity and FM Global Property Loss Prevention Data Sheet 1-29, as follows:
    1) Set each layer of insulation in ribbons of bead-applied insulation adhesive, firmly pressing and maintaining insulation in place.

3.06 INSTALLATION OF COVER BOARDS

A. Install cover boards over insulation with long joints in continuous straight lines with end joints staggered between rows. Offset joints of insulation below a minimum of 6 inches in each direction.
    1. Trim cover board neatly to fit around penetrations and projections, and to fit tight to intersecting sloping roof decks.
    2. At internal roof drains, conform to slope of drain sump.
        a. Trim cover board so that water flow is unrestricted.
    3. Cut and fit cover board tight to nailers, projections, and penetrations.
    4. Loosely lay cover board over substrate.
    5. Adhere cover board to substrate using adhesive according to SPRI's Directory of Roof Assemblies listed roof assembly requirements for specified Wind Uplift Load Capacity and FM Global Property Loss Prevention Data Sheet 1-29, as follows:
        a. Set cover board in ribbons of bead-applied insulation adhesive, firmly pressing and maintaining insulation in place.

3.07 INSTALLATION OF ADHERED ROOF MEMBRANE

A. Adhere roof membrane over area to receive roofing according to roofing system manufacturer's written instructions.

B. Unroll roof membrane and allow to relax before installing.

C. Start installation of roofing in presence of roofing system manufacturer's technical personnel.

MasterSpec Copyright © 2023 by the American Institute of Architects, portions Copyright © 2023 by HMC Architects for KHSD Arvin HS ESSER III Phase I Roofing Project..
Warning: This AIA MasterSpec based document is protected by U.S. Copyright Law and International Treaties.

D. Accurately align roof membrane, and maintain uniform side and end laps of minimum dimensions required by manufacturer. Stagger end laps.

E. Bonding Adhesive: Apply to substrate and underside of roof membrane at rate required by manufacturer, and allow to partially dry before installing roof membrane. Do not apply to splice area of roof membrane.

F. Fabric-Backed Roof Membrane Adhesive: Apply to substrate at rate required by manufacturer, and install fabric-backed roof membrane.

G. In addition to adhering, mechanically fasten roof membrane securely at terminations, penetrations, and perimeter of roofing.

H. Apply roof membrane with side laps shingled with slope of roof deck where possible.

I. Seams: Clean seam areas, overlap roof membrane, and hot-air weld side and end laps of roof membrane and sheet flashings, to ensure a watertight seam installation.
   1. Test lap edges with probe to verify seam weld continuity. Apply lap sealant to seal cut edges of roof membrane and sheet flashings.
   2. Verify field strength of seams a minimum of twice daily, and repair seam sample areas.
   3. Repair tears, voids, and lapped seams in roof membrane that do not comply with requirements.

J. Spread sealant bed over deck-drain flange at roof drains, and securely seal roof membrane in place with clamping ring.

3.08 INSTALLATION OF BASE FLASHING

A. Install sheet flashings and preformed flashing accessories, and adhere to substrates according to roofing system manufacturer's written instructions.

B. Apply bonding adhesive to substrate and underside of sheet flashing at required rate, and allow to partially dry. Do not apply to seam area of flashing.

C. Flash penetrations and field-formed inside and outside corners with cured or uncured sheet flashing.

D. Clean seam areas, overlap, and firmly roll sheet flashings into the adhesive. Hot-air weld side and end laps to ensure a watertight seam installation.

E. Terminate and seal top of sheet flashings and mechanically anchor to substrate through termination bars.

3.09 INSTALLATION OF WALKWAYS

A. Flexible Walkways:

MasterSpec Copyright © 2023 by the American Institute of Architects, portions Copyright © 2023 by HMC Architects for KHSD Arvin HS ESSER III Phase I Roofing Project..
Warning: This AIA MasterSpec based document is protected by U.S. Copyright Law and International Treaties.

1. Install flexible walkways at the following locations:
   a. Retain one or more subparagraphs below. Revise to suit Project.
   b. Perimeter of each rooftop unit.
   c. Between each rooftop unit location, creating a continuous path connecting rooftop unit locations.
   d. Between each roof hatch and each rooftop unit location or path connecting rooftop unit locations.
   e. Top and bottom of each roof access ladder.
   f. Between each roof access ladder and each rooftop unit location or path connecting rooftop unit locations.
   g. Locations indicated on Drawings.
   h. As required by roof membrane manufacturer's warranty requirements.
2. Provide 6-inch clearance between adjoining pads.
3. Heat weld to substrate or adhere walkway products to substrate with compatible adhesive according to roofing system manufacturer's written instructions.

3.10 FIELD QUALITY CONTROL

A. Final Roof Inspection: Arrange for roofing system manufacturer's technical personnel to inspect roofing installation on completion, in presence of Architect, and to prepare inspection report.

B. Repair or remove and replace components of roofing system where inspections indicate that they do not comply with specified requirements.

C. Additional testing and inspecting, at Contractor's expense, will be performed to determine if replaced or additional work complies with specified requirements.

3.11 PROTECTING AND CLEANING

A. Protect roofing system from damage and wear during remainder of construction period. When remaining construction does not affect or endanger roofing system, inspect roofing system for deterioration and damage, describing its nature and extent in a written report, with copies to Architect and Owner.

B. Correct deficiencies in or remove roofing system that does not comply with requirements, repair substrates, and repair or reinstall roofing system to a condition free of damage and deterioration at time of Substantial Completion and according to warranty requirements.

C. Clean overspray and spillage from adjacent construction using cleaning agents and procedures recommended by manufacturer of affected construction.

END OF SECTION

MasterSpec Copyright © 2023 by the American Institute of Architects, portions Copyright © 2023 by HMC Architects for KHSD Arvin HS ESSER III Phase I Roofing Project..
Warning: This AIA MasterSpec based document is protected by U.S. Copyright Law and International Treaties.

THE LINE SHOWN ABOVE IS EXACTLY ONE INCH ON THIS SHEET'S ORIGINAL PAGE SIZE

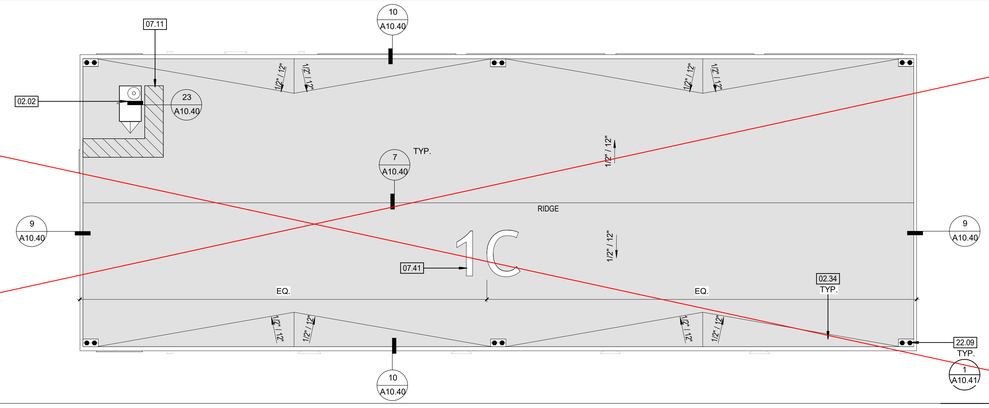

BLDG 1C - ROOF PLAN - REMODEL **3**
3/32" = 1'-0"

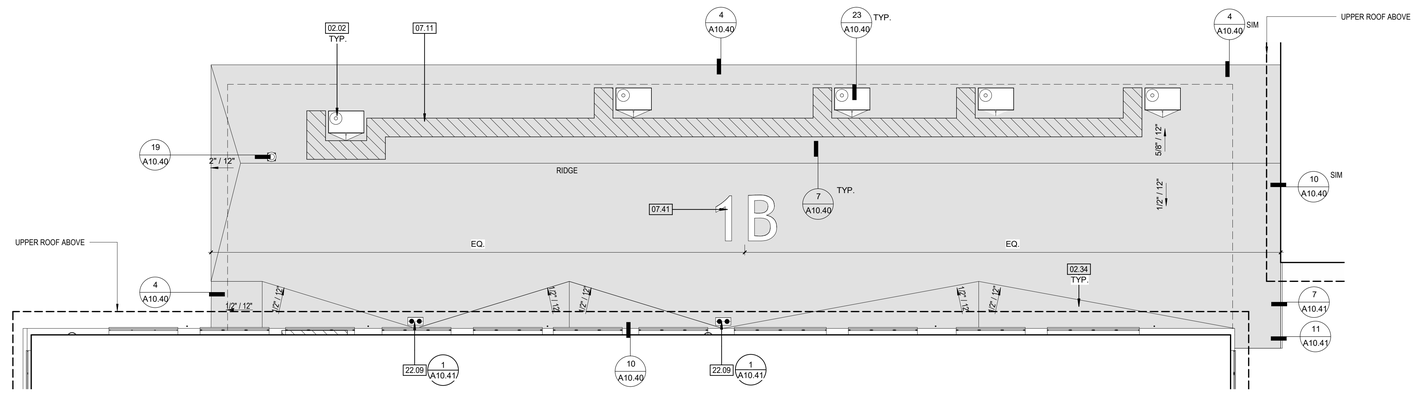

BLDG 1-AB - LOWER ROOF PLAN - REMODEL **2**
3/32" = 1'-0"

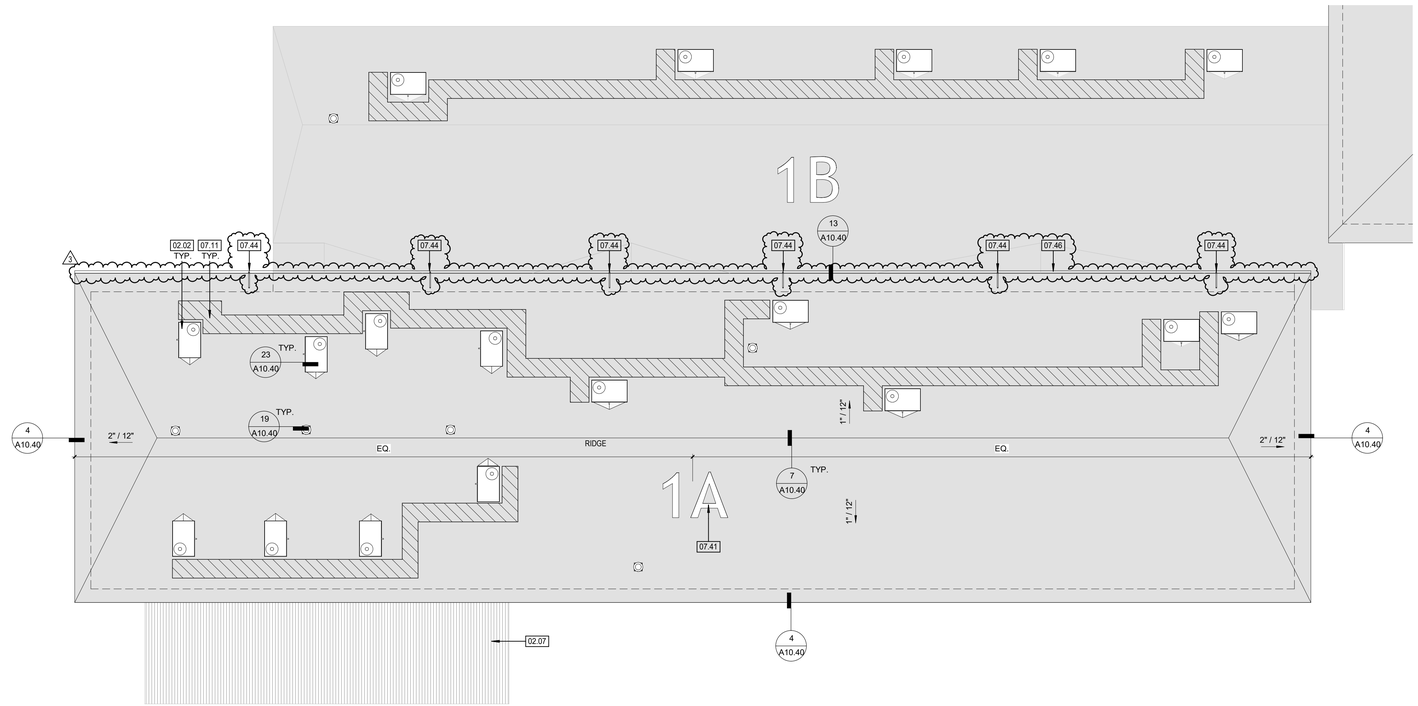

BLDG 1-AB - UPPER ROOF PLAN - REMODEL **1**
3/32" = 1'-0"

APPROVED
DIV. OF THE STATE ARCHITECT
APP: 03-123508 INC: 0
REVIEWED FOR
SS ☑ FLS ☑ ACS ☑
DATE: 01/11/2024

KERN HIGH SCHOOL DISTRICT
Tradition of Excellence
Est. 1893

HMC Architects

3566-002-103

3546 CONCOURS STREET
ONTARIO, CA 91764
909 989 9979 / www.hmcarchitects.com

LICENSED ARCHITECT
VIRGINIA ELAINE MARQUARDT
No. C-33423
05/30/2025
STATE OF CALIFORNIA

ISSUE

Δ	DESCRIPTION	DATE
3	Addendum 03	11/30/2023

KEYNOTES

02.02	(E) HVAC UNIT AND CURB TO REMAIN, PROTECT IN PLACE, REPLACE CURB ROOF MEMBRANE FLASHING PER DETAILS 14/A10.40 AND 16/A10.40.
02.07	(E) METAL DECK ROOF TO REMAIN, PROTECT IN PLACE
02.34	(E) CRICKETS TO REMAIN. PROTECT IN PLACE.
07.11	ROOF WALKWAY PADS, REFER TO SPEC. SECTION 07 54 19.30
3 07.41	ROOF GRAPHIC MEMBRANE
07.44	SCHEDULE 40 DOWNSPOUT, REFER TO DETAIL 24 & 25/A10.41.
07.46	20 GA. PRE FINISHED GALV. GUTTER, REFER TO DETAIL 13/A10.40.
22.09	ROOF DRAIN W/ OVERFLOW DRAIN. REFER TO SPEC SECTION 22 14 23.

LEGEND - ENLARGED ROOF PLANS

- EXISTING ROOFING MATERIAL TO BE REMOVED. EXISTING SHEATHING TO REMAIN, SHEATHING TO BE INSPECTED FOR DRY ROT, TERMITE, AND MOISTURE DAMAGE. NOTIFY ARCHITECT IF DAMAGE IS FOUND. **EXTENTS AND ANY REPAIR OF ROOF SHEATHING SHALL BE PERFORMED BY A CONSTRUCTION CHANGE DOCUMENT (CCD), APPROVED BY DSA.** PREP ROOF SHEATHING FOR NEW PVC ROOF MEMBRANE ASSEMBLY.
- EXISTING CANOPY TO BE REMOVED
- NEW SINGLE PLY PVC ROOFING CLASS-A, SEE DETAIL 1, 2 OR 3 ON SHEET A10.40 FOR ROOF ASSEMBLY
- EXISTING BUILT-UP ROOFING TO REMAIN
- ROOF WALKWAY PADS

NOTES - ROOF PLANS

1. ALL ROOFING MATERIAL INCLUDING MEMBRANE, FLASHING, EDGES, AND PENETRATIONS TO BE INSTALLED PER MANUFACTURER REQUIREMENTS. SEE SHEET A10.40 AND A10.41 TYPICAL ROOFING DETAILS.
2. REFER TO PLUMBING AND ELECTRICAL DRAWINGS FOR ADDITIONAL SCOPE NOT SHOWN.
3. NO WORK, INCLUDING DEMOLITION, SHALL BEGIN UNTIL PLANS AND SPECIFICATIONS HAVE BEEN APPROVED BY DSA.
4. (E) UTILITIES ON THE ROOF TO BE PROTECTED DURING DEMOLITION AND INSTALLATION OF ROOFING MEMBRANE. CONTRACTOR TO WALK THE JOB PRIOR TO BID.

KEY PLAN:

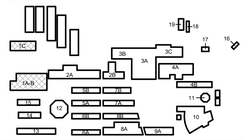

FACILITY:
Arvin High School
900 Varsity Rd
Arvin, CA 93203

PROJECT:
KHSD Arvin High School ESSER III Phase 1 Roofing Project

SHEET NAME:
BLDG 1A/1B & IC - ROOF PLAN - REMODEL

DSA SUBMITTAL

FILE NO.: 15-H3 **A NO.: 03-123508**
DATE: **2023.07.25** CLIENT PROJ NO: **3566002103**
SHEET:

A4.21

BIM 360://3566002000 Arvin HS ESSER III/356600200 0-A-KHSD Arvin HS Roof Replacement.rvt
11/30/2023 9:14:31 AM

PLEASE RECYCLE

THE LINE SHOWN ABOVE IS 1" WHEN PRINTED ON A THIS SHEET'S ORIGINAL PAGE SIZE

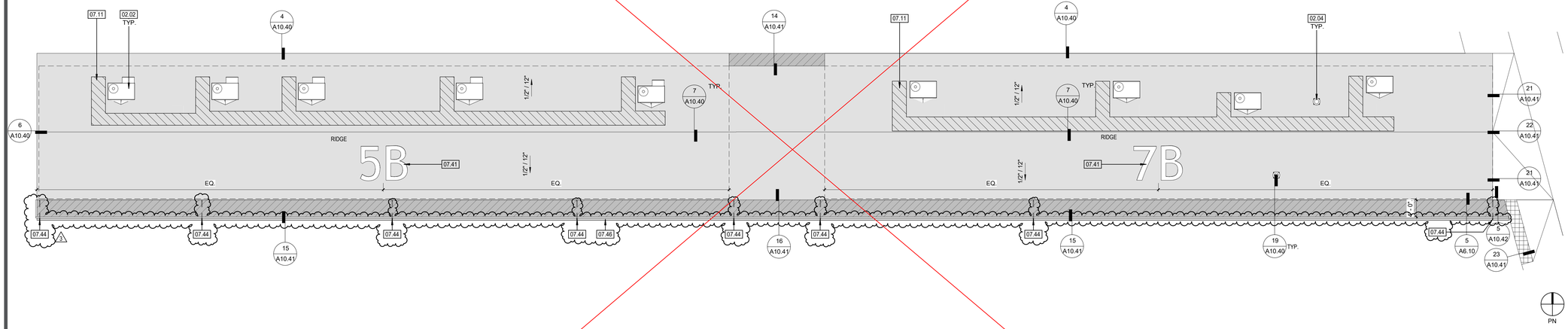

BLDG 5B & 7B - ROOF PLAN - REMODEL 2

3/32" = 1'-0"

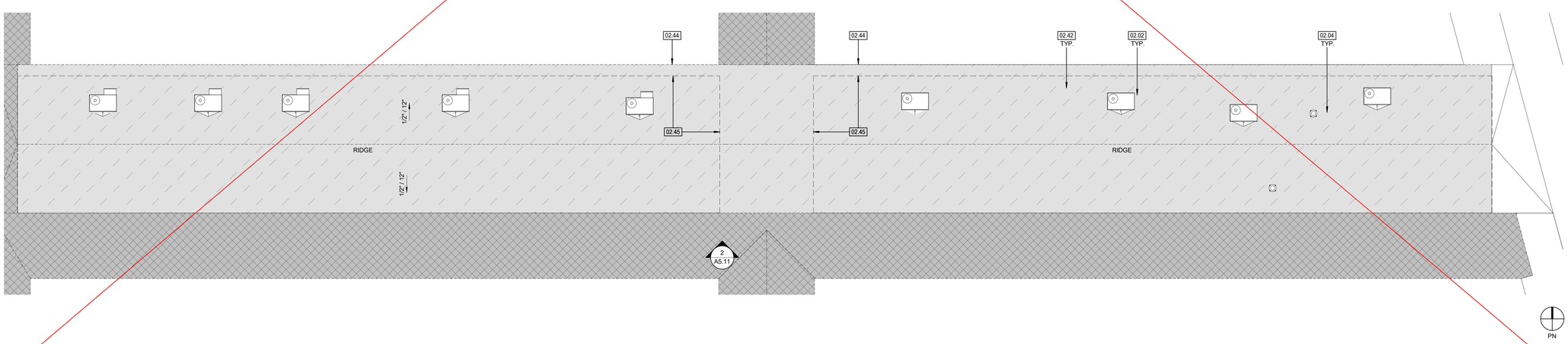

BLDG 5B & 7B - ROOF PLAN - DEMO 1

3/32" = 1'-0"

APPROVED
DIV. OF THE STATE ARCHITECT
APP: 03-123508 INC: 0
REVIEWED FOR
SS ☑ FLS ☑ ACS ☑
DATE: 01/11/2024

KERN HIGH SCHOOL DISTRICT
Tradition of Excellence
Est. 1893

HMC Architects

3566-002-103

3546 CONCOURS STREET
ONTARIO, CA 91764
909 989 9979 / www.hmcarchitects.com

LICENSED ARCHITECT
VIRGINIA ELAINE MARQUARDT
No. C-33423
05/30/2025
STATE OF CALIFORNIA

ISSUE

Δ	DESCRIPTION	DATE
3	Addendum 03	11/30/2023

KEYNOTES

02.02	(E) HVAC UNIT AND CURB TO REMAIN. PROTECT IN PLACE. REPLACE CURB ROOF MEMBRANE FLASHING PER DETAILS 14/A10.40 AND 16/A10.40.
02.04	(E) EXHAUST FAN AND CURB TO REMAIN. PROTECT IN PLACE. REPLACE CURB ROOF MEMBRANE FLASHING PER DETAILS 18/A10.40.
02.42	PROTECT ALL EXISTING UTILITIES DURING ROOF DEMOLITION AND RE-ROOFING. CONTRACTOR TO WALK THE JOB PRIOR TO BID.
02.44	EDGE OF OVERHANG
02.45	EDGE OF BUILDING
07.11	ROOF WALKWAY PADS, REFER TO SPEC. SECTION 07 54 19.30
07.41	ROOF GRAPHIC MEMBRANE.
07.44	SCHEDULE 40 DOWNSPOUT, REFER TO DETAIL 24 & 25/A10.41.
07.46	20 GA. PRE FINISHED GALV. GUTTER, REFER TO DETAIL 13/A10.40.

LEGEND - ENLARGED ROOF PLANS

- EXISTING BUILT-UP ROOFING MATERIAL TO BE REMOVED, EXISTING SHEATHING TO REMAIN, SHEATHING TO BE INSPECTED FOR DRY ROT, TERMITE, AND MOISTURE DAMAGE. NOTIFY ARCHITECT IF DAMAGE IS FOUND. **EXTENTS AND ANY REPAIR OF ROOF SHEATHING SHALL BE PERFORMED BY A CONSTRUCTION CHANGE DOCUMENT (CCD), APPROVED BY DSA.** PREP ROOF SHEATHING FOR NEW PVC ROOF MEMBRANE ASSEMBLY.
- EXISTING CANOPY TO BE REMOVED. SEE A3.10 FOR START AND ENDING LOCATONS OF REMOVAL.
- NEW SINGLE PLY PVC ROOFING CLASS-A, SEE DETAIL 1, 2 OR 3 ON SHEET A10.40 FOR ROOF ASSEMBLY
- EXISTING BUILT-UP ROOFING TO REMAIN
- ROOF WALKWAY PADS
- NEW BUILT UP ROOFING TO PATCH REPAIR NEW FRAMING
- (N) OVERHANG EXTENSION

1. ALL ROOFING MATERIAL INCLUDING MEMBRANE, FLASHING, EDGES, GUTTERS, MECHANICAL EQUIPMENT CURBS FLASHING, EXHAUST FANS, SKYLIGHTS AND ALL PIPE / CONDUIT PENETRATIONS TO BE INSTALLED PER MANUFACTURER REQUIREMENTS. SEE SHEET A10.40 AND A10.41 TYPICAL ROOFING DETAILS.
2. REFER TO PLUMBING AND ELECTRICAL DRAWINGS FOR ADDITIONAL SCOPE NOT SHOWN.
3. NO WORK, INCLUDING DEMOLITION, SHALL BEGIN UNTIL PLANS AND SPECIFICATIONS HAVE BEEN APPROVED BY DSA.
4. (E) UTILITIES ON THE ROOF TO BE PROTECTED DURING DEMOLITION AND INSTALLATION OF ROOFING MEMBRANE. CONTRACTOR TO WALK THE JOB PRIOR TO BID.

KEY PLAN:

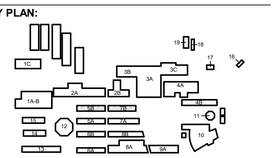

FACILITY:

Arvin High School
900 Varsity Rd
Arvin, CA 93203

PROJECT:

KHSD Arvin High School ESSER III Phase 1 Roofing Project

SHEET NAME:

BLDG 5B & 7B - ROOF PLAN - DEMO & REMODEL

DSA SUBMITTAL

FILE NO.: **15-H3**	A NO.: **03-123508**
DATE: **2023.07.25**	CLIENT PROJ NO: **3566002103**
SHEET:	

A4.40

BIM 360://3566002000 Arvin HS ESSER III/3566002000-A-KHSD Arvin HS Roof Replacement.rvt
11/30/2023 9:15:30 AM

PLEASE RECYCLE

THE LINE SHOWN ABOVE IS EXACTLY 1" WHEN PLOTTED ON THIS SHEET IS ORIGINAL PAGE SIZE

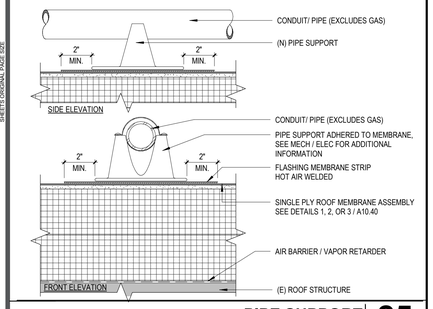

PIPE SUPPORT 25 3" = 1'-0"

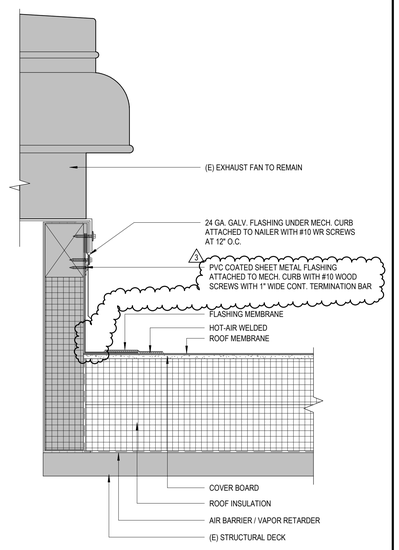

FLASHING AT EXHAUST FAN 19 3" = 1'-0"

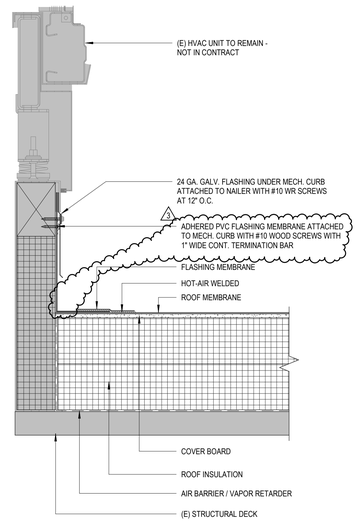

FLASHING AT AIR HANDLER 14 3" = 1'-0"

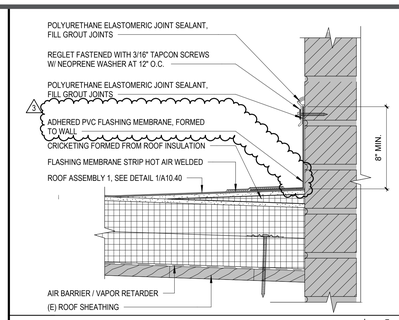

WALL FLASHING - CRICKET AT BRICK WALL 10 3" = 1'-0"

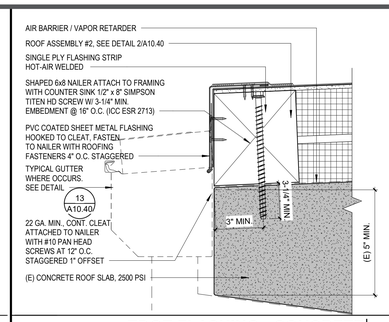

EDGE FLASHING - CONCRETE 5 3" = 1'-0"

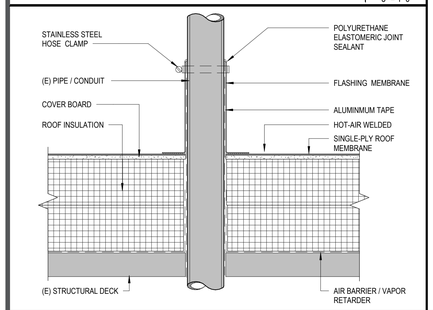

PIPE PENETRATION FLASHING 24 3" = 1'-0"

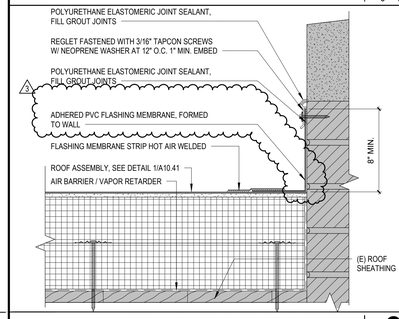

WALL FLASHING AT PARAPET 9 3" = 1'-0"

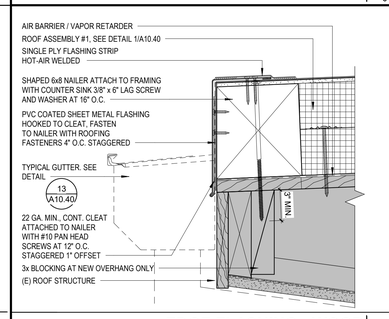

EDGE FLASHING - WOOD 4 3" = 1'-0"

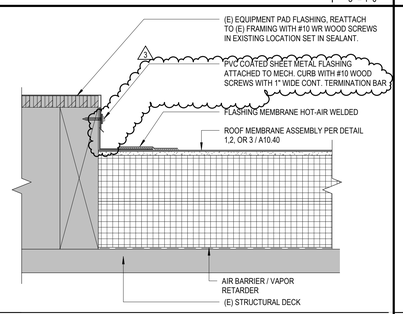

FLASHING EQUIPMENT CURB 23 3" = 1'-0"

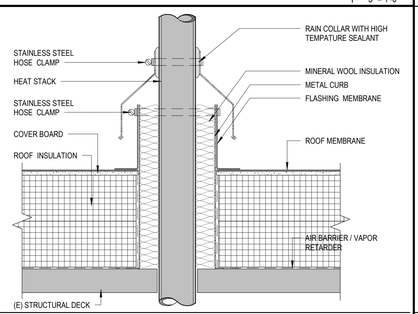

HEAT STACK FLASHING 18 3" = 1'-0"

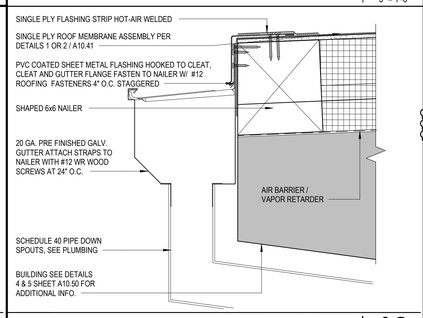

TYPICAL GUTTER 13 3" = 1'-0"

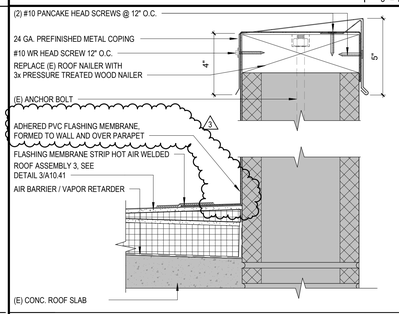

WALL PARAPET FLASHING 8 3" = 1'-0"

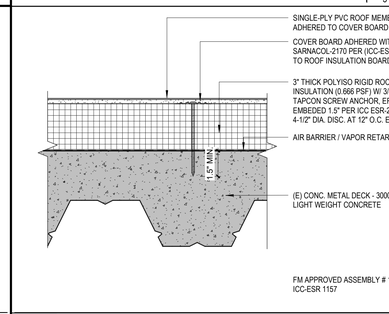

ROOF ASSEMBLY 3 (BLDG. 2A EXPANSION) 3 3" = 1'-0"

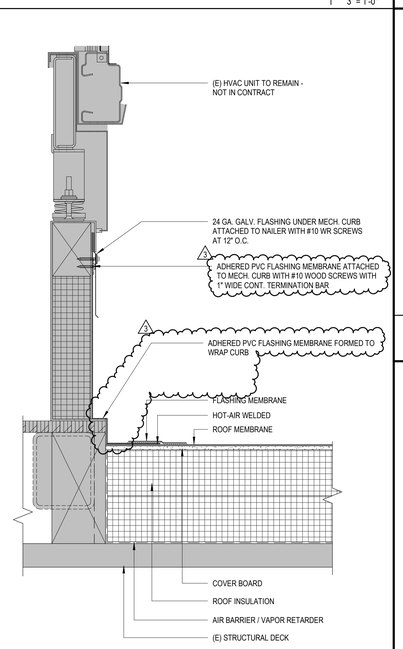

FLASHING AT AIR HANDLER WITH CURBS 21 3" = 1'-0"

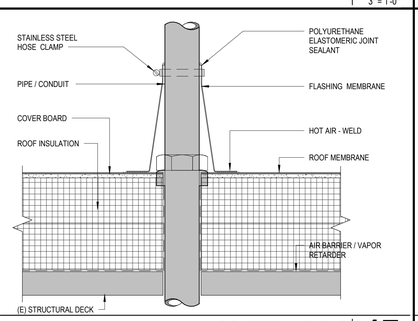

CONE FLASHING 17 3" = 1'-0"

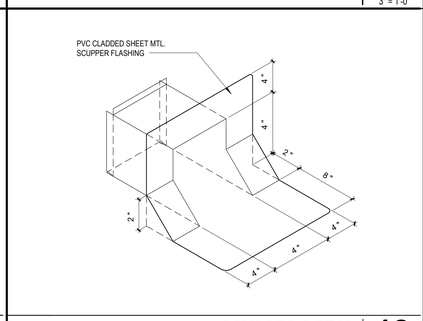

SCUPPER DETAIL 12 3" = 1'-0"

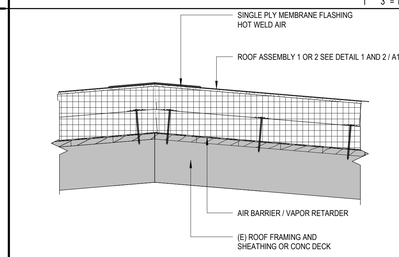

ROOF RIDGE 7 1 1/2" = 1'-0"

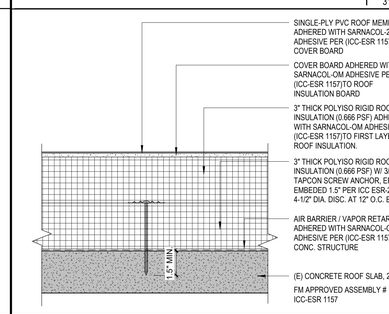

ROOF ASSEMBLY 2 (BLDG 2B AND 9A) 2 3" = 1'-0"

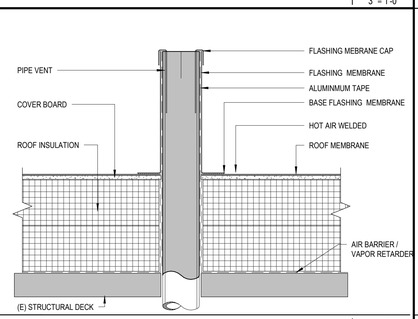

VENT STACK FLASHING 16 3" = 1'-0"

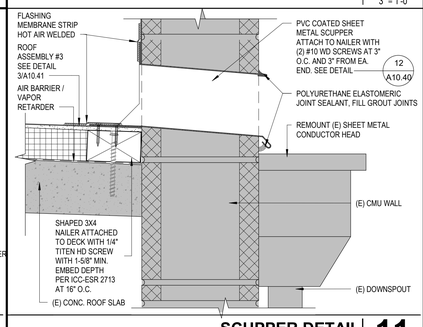

SCUPPER DETAIL 11 3" = 1'-0"

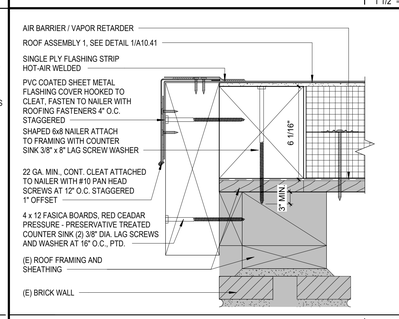

EDGE FLASHING - WOOD RIDGE 6 3" = 1'-0"

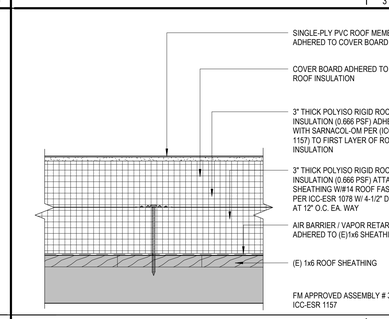

ROOF ASSEMBLY 1 (BLDGS 1A,1B,1C,2A,2B,5B,7B,13,14 AND 15) 1 3" = 1'-0"

APPROVED
DIV. OF THE STATE ARCHITECT
APP: 03-123508 INC: 0
REVIEWED FOR
SS ☑ FLS ☑ ACS ☑
DATE: 01/11/2024

KERN HIGH SCHOOL DISTRICT
Tradition of Excellence
Est. 1893

HMC Architects

3566-002-103

3546 CONCOURS STREET
ONTARIO, CA 91764
909 989 9979 / www.hmcarchitects.com

LICENSED ARCHITECT
VIRGINIA ELAINE MARQUARDT
No. C-33423
05/30/2025
STATE OF CALIFORNIA

ISSUE

Δ	DESCRIPTION	DATE
3	Addendum 03	11/30/2023

KEYNOTES

NOTES

FACILITY:
Arvin High School
900 Varsity Rd
Arvin, CA 93203

PROJECT:
KHSD Arvin High School ESSER III Phase 1 Roofing Project

SHEET NAME:
ROOF DETAILS

DSA SUBMITTAL

FILE NO.: **15-H3** A NO.: **03-123508**

DATE: **2023.07.25** CLIENT PROJ NO: **3566002103**

SHEET:

A10.40

BIM 360://3566002000 Arvin HS ESSER III/3566002000-A-KHSD Arvin HS Roof Replacement.rvt
11/30/2023 9:16:09 AM

PLEASE RECYCLE

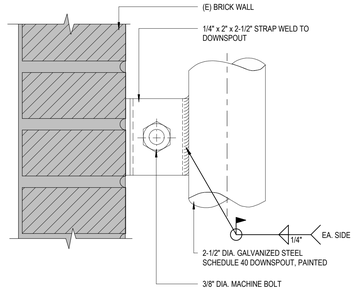

ELEVATION OF DOWNSPOUT AT BRICK WALL 25
6" = 1'-0"

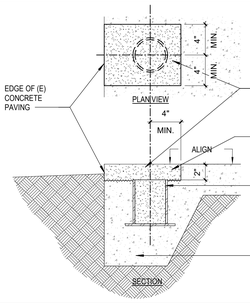

CUT COLUMN DETAIL 20
1 1/2" = 1'-0"

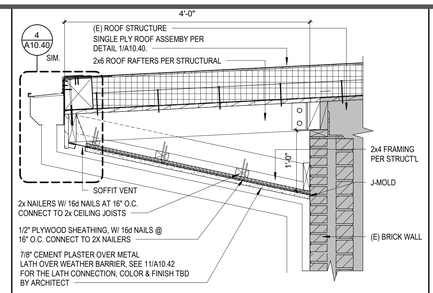

BLDG 5B - 7B - EAVE DETAIL 15
1" = 1'-0"

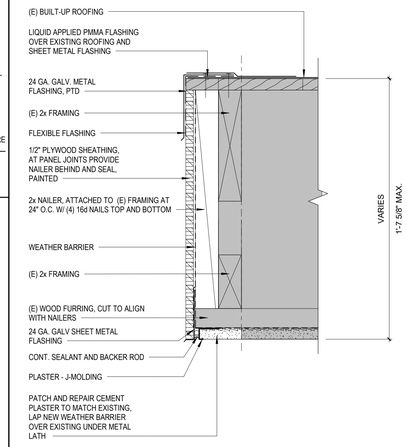

BLDG 2B - CANOPY FILLER PANEL 9
3" = 1'-0"

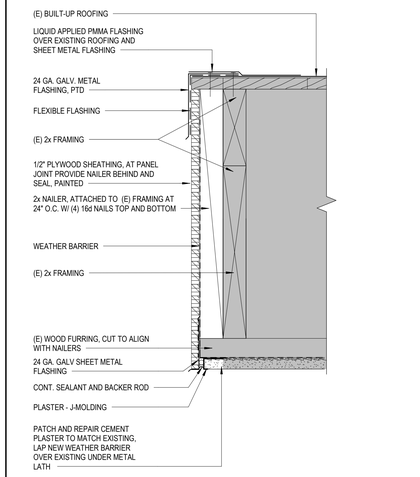

CANOPY CORRIDOR EDGE 4
3" = 1'-0"

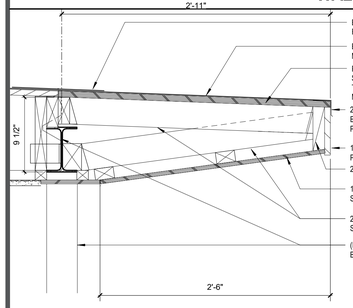

RE-FRAME AT WALKWAY ROOF EXTENSION ADJACENT TO BLDG 7B 23
1 1/2" = 1'-0"

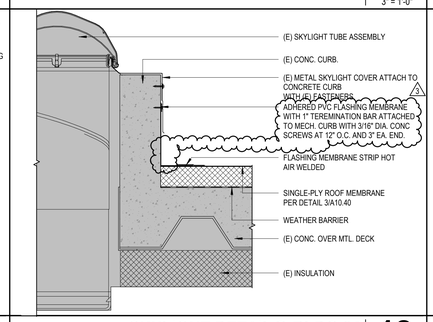

SKYLIGHT DETAIL@ BLDG 2A 18
1 1/2" = 1'-0"

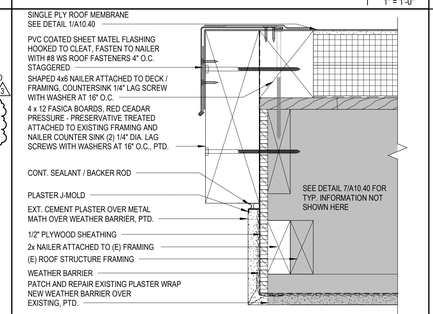

BLDG 5B EDGE CANOPY 13
3" = 1'-0"

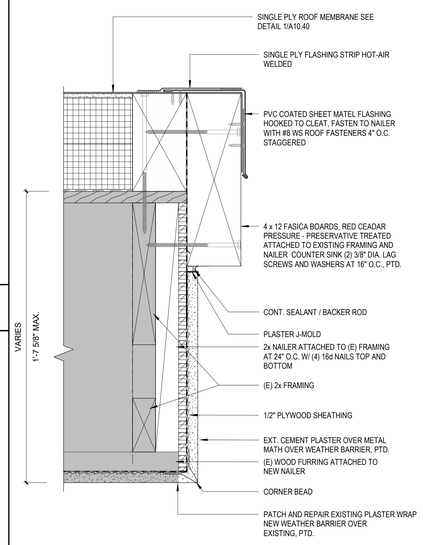

BLDG 2A - FLASHING DETAIL 2
3" = 1'-0"

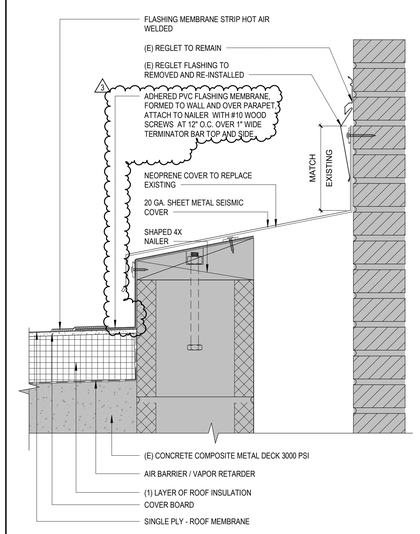

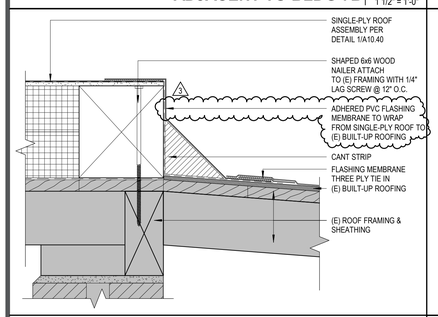

BLDG 7B - TRANSITION @ (N) ROOFING TO EXISTING ROOFING 22
3" = 1'-0"

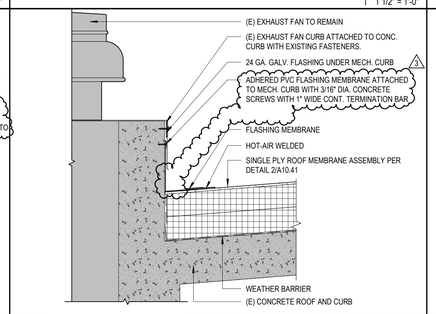

EXHAUST FAN CURB DETAIL 17
1 1/2" = 1'-0"

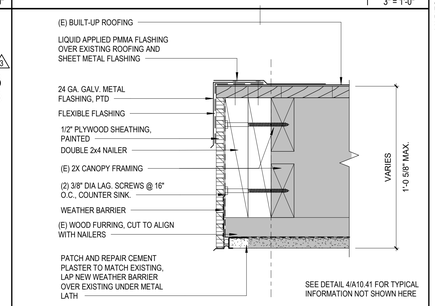

BLDG 2B/7B - CANOPY FILLER PANEL 12
3" = 1'-0"

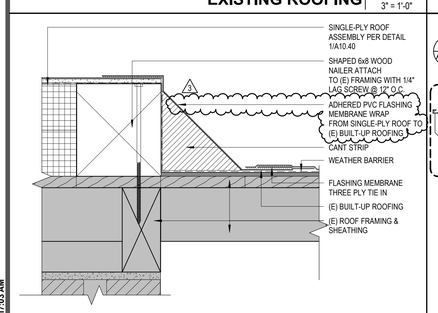

BLDG 7B - TRANSITION @ (N) ROOFING TO EXISTING ROOFING - FLAT ROOF 21
3" = 1'-0"

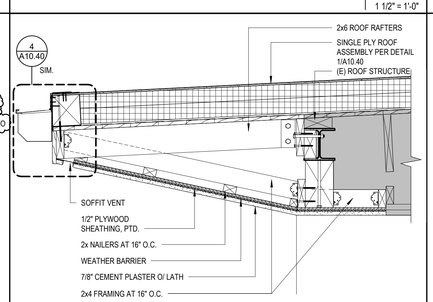

BLDG 5B - 7B - EAVE DETAIL 16
1" = 1'-0"

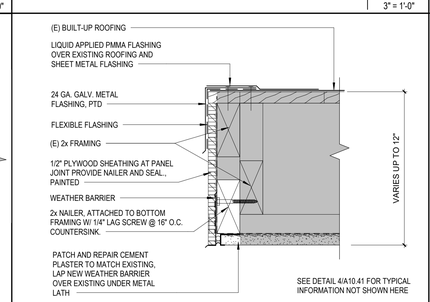

CANOPY EDGE END 11
3" = 1'-0"

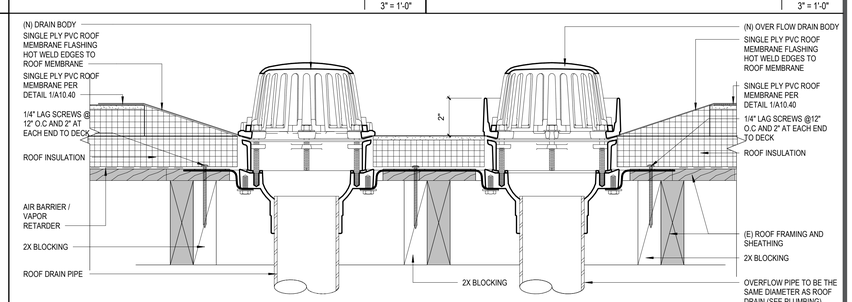

ROOF DRAIN 1
3" = 1'-0"

THE LINE SHOWN ABOVE IS 1" WHEN PRINTED ON THIS SHEETS ORIGINAL PAGE SIZE

BIM 360://3566002000 Arvin HS ESSER III/3566002000-A-KHSD Arvin HS Roof Replacement.rvt
11/30/2023 9:17:03 AM

APPROVED
DIV. OF THE STATE ARCHITECT
APP: 03-123508 INC: 0
REVIEWED FOR
SS ☑ FLS ☑ ACS ☑
DATE: 01/11/2024

KERN HIGH SCHOOL DISTRICT
Tradition of Excellence
Est. 1893

HMC Architects
3566-002-103
3546 CONCOURS STREET
ONTARIO, CA 91764
909 989 9979 / www.hmcarchitects.com

LICENSED ARCHITECT
VIRGINIA ELAINE MARQUARDT
No. C-33423
05/30/2025
STATE OF CALIFORNIA

ISSUE

Δ	DESCRIPTION	DATE
3	Addendum 03	11/30/2023

KEYNOTES

NOTES

FACILITY:
Arvin High School
900 Varsity Rd
Arvin, CA 93203

PROJECT:
KHSD Arvin High School ESSER III Phase 1 Roofing Project

SHEET NAME:
ROOF DETAILS

DSA SUBMITTAL

FILE NO.: **15-H3** A NO.: **03-123508**
DATE: **2023.07.25** CLIENT PROJ NO: **3566002103**
SHEET:

A10.41

PLEASE RECYCLE

HMC ARCHITECTS
3546 Concours Street
Ontario, California 91764

APPROVED
DIV. OF THE STATE ARCHITECT
APP: 03-123508 INC:
REVIEWED FOR
SS ☑ FLS ☐ ACS ☐
DATE: 03/28/2024

March 19, 2024

Arvin High School ESSER III Phase 1 Roofing
Kern High School District
HMC # 3566002103
File No: 15-H3 A#03-123508

CCD NO. 001-A

The following changes, additions, deletions, or corrections shall become a part of the Contract Documents for the project named above and all other conditions shall remain the same. The contractor shall be responsible for transmitting this information to all affected subcontractors and suppliers.

Reference / Purpose. Due to the increase in the height of the roof insulation, the HVAC roof units, exhaust fans, pipe penetrations, and supports must be raised and readjusted to the roofing manufacturer's specified minimum 4-inch flashing requirements.

DRAWINGS:

Item No. CCD 001-A: DRAWINGS

The following revised Architectural and Structural drawing are hereby issued:

Architectural

A10.40 – "ROOF DETAILS"

A. ADDED, Note as shown and clouded per Delta 1.

A10.41 – "ROOF DETAILS"

A. ADDED, Note as shown and clouded per Delta 1.

Structural

S1.01 – "DETAILS"

A. ADDED, Detail 13/S1.01 "Equipment Anchorage Detail" as shown and Clouded per Delta 1.
B. ADDED, Detail 14/S1.01 "Equipment Anchorage Detail" as shown and Clouded per Delta 1.

Attachments: Drawing Sheets A10.40, A10.41 and S1.01

HMC ARCHITECTS

By_____
(Signature of Architect of Record or Alternate)

THE LINE SHOWN ABOVE IS EXACTLY 1" WHEN PLOTTED AT THIS SHEET'S ORIGINAL PAGE SIZE

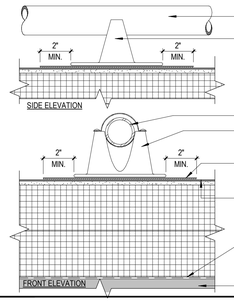

PIPE SUPPORT 25 3" = 1'-0"

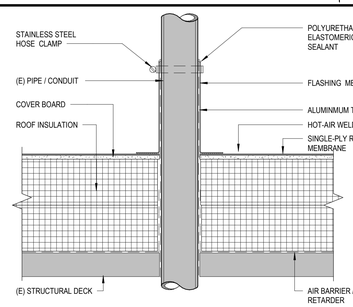

PIPE PENETRATION FLASHING 24 3" = 1'-0"

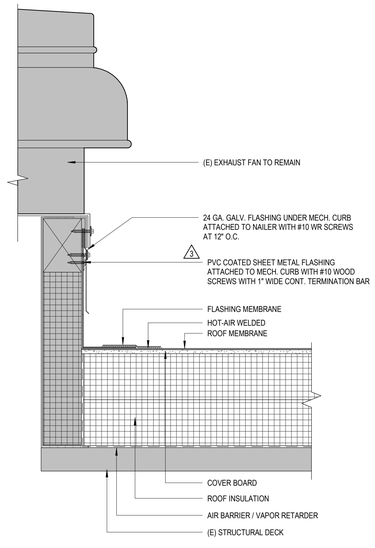

FLASHING AT EXHAUST FAN 19 3" = 1'-0"

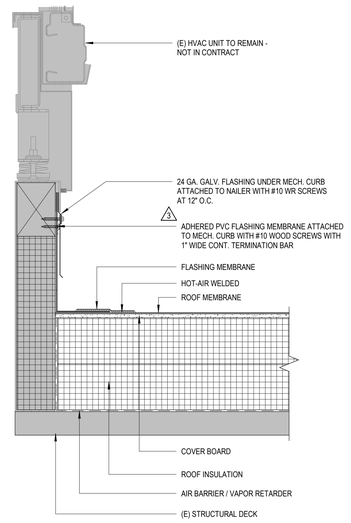

FLASHING AT AIR HANDLER 14 3" = 1'-0"

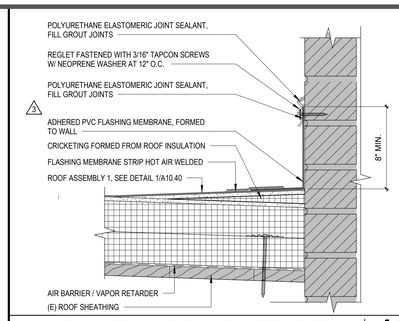

WALL FLASHING - CRICKET AT BRICK WALL 10 3" = 1'-0"

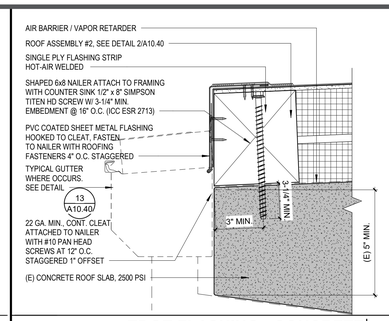

EDGE FLASHING - CONCRETE 5 3" = 1'-0"

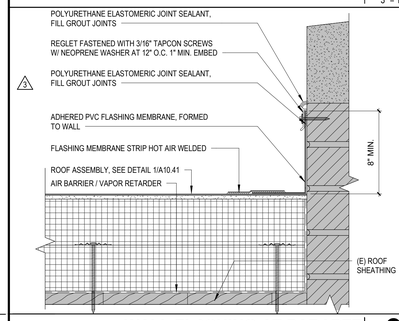

WALL FLASHING AT PARAPET 9 3" = 1'-0"

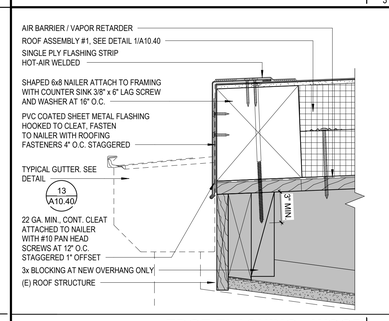

EDGE FLASHING - WOOD 4 3" = 1'-0"

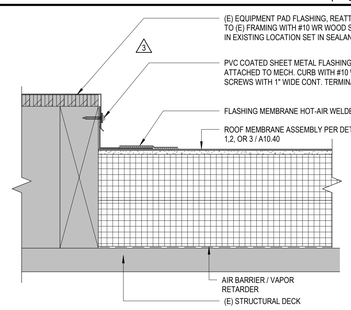

FLASHING EQUIPMENT CURB 23 3" = 1'-0"

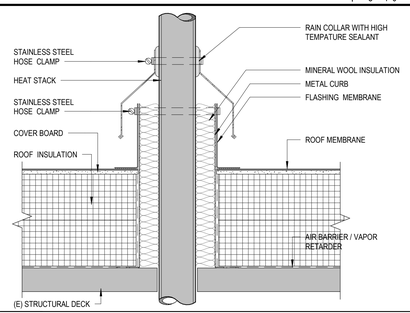

HEAT STACK FLASHING 18 3" = 1'-0"

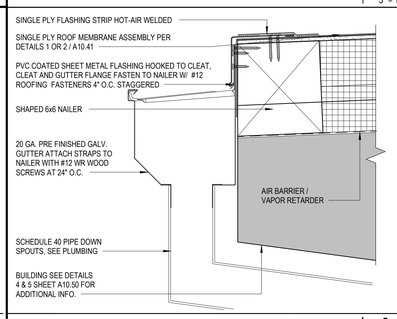

TYPICAL GUTTER 13 3" = 1'-0"

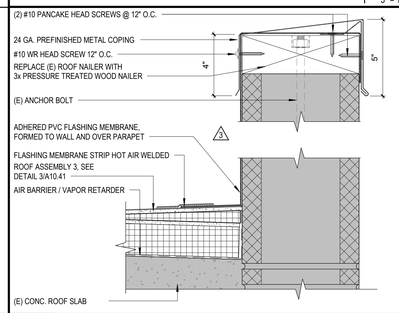

WALL PARAPET FLASHING 8 3" = 1'-0"

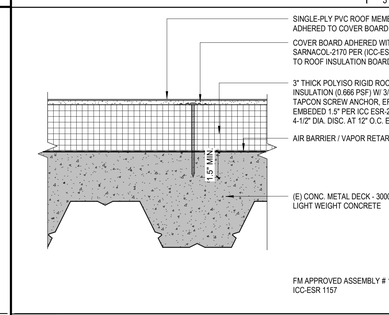

ROOF ASSEMBLY 3 (BLDG. 2A EXPANSION) 3 3" = 1'-0"

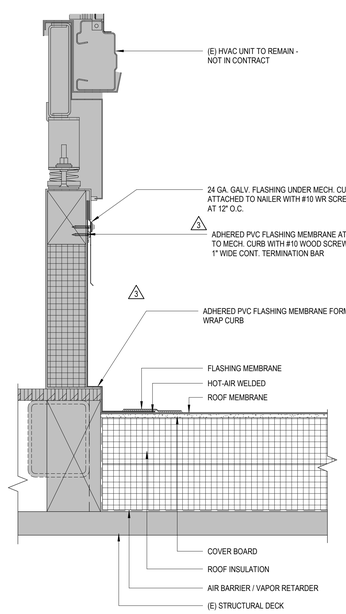

FLASHING AT AIR HANDLER WITH CURBS 21 3" = 1'-0"

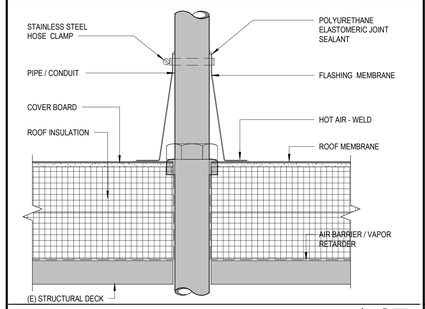

CONE FLASHING 17 3" = 1'-0"

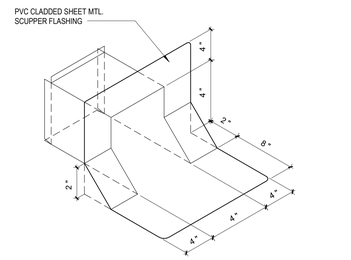

SCUPPER DETAIL 12 3" = 1'-0"

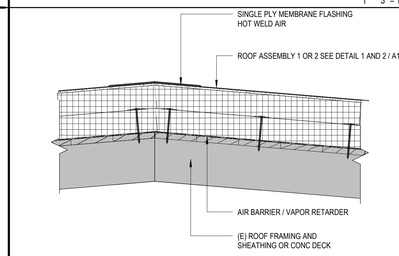

ROOF RIDGE 7 1 1/2" = 1'-0"

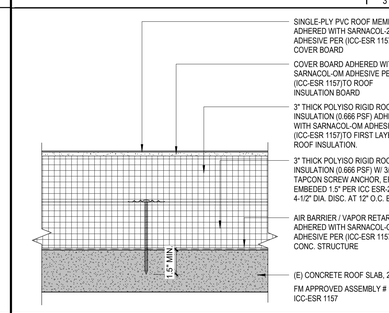

ROOF ASSEMBLY 2 (BLDG 2B AND 9A) 2 3" = 1'-0"

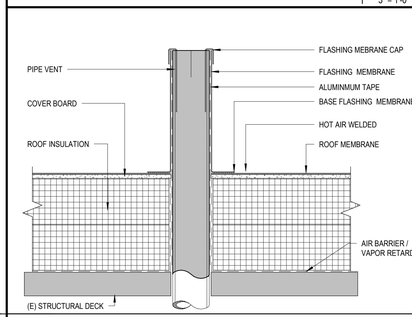

VENT STACK FLASHING 16 3" = 1'-0"

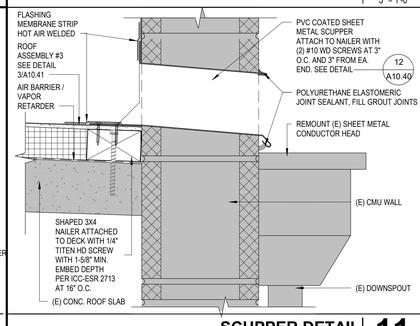

SCUPPER DETAIL 11 3" = 1'-0"

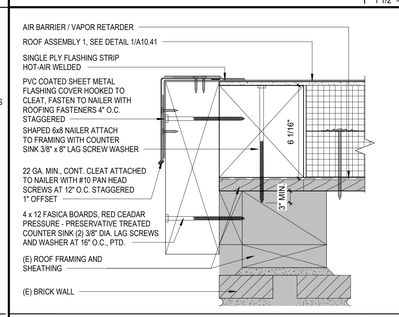

EDGE FLASHING - WOOD RIDGE 6 3" = 1'-0"

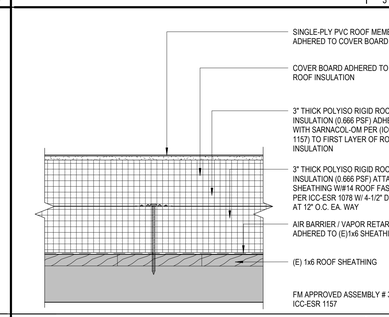

ROOF ASSEMBLY 1 (BLDGS 1A,1B,1C,2A,2B,5B,7B,13,14 AND 15) 1 3" = 1'-0"

APPROVED
DIV. OF THE STATE ARCHITECT
APP#: 03-123508 INC:
REVIEWED FOR
SS ☑ FLS ☐ ACS ☐
DATE: 03/28/2024

KERN HIGH SCHOOL DISTRICT
Tradition of Excellence
Est. 1893

HMC Architects

3566-002-103

LICENSED ARCHITECT
VIRGINIA ELAINE MARQUARDT
03/30/2024
STATE OF CALIFORNIA

3546 CONCOURS STREET
ONTARIO, CA 91764
909 989 9979 / www.hmcarchitects.com

ISSUE

Δ	DESCRIPTION	DATE
1	CCD_001	03/19/24
3	Addendum 03	11/30/23

KEYNOTES

NOTES

- THE CONTRACTOR NEEDS TO VERIFY A MINIMUM **8-INCH** HEIGHT CLEARANCE FOR HVAC UNITS, EXHAUST FANS, VENTS, PIPE PENETRATIONS, ETC., FOLLOWING THE INSTALLATION OF THE NEW RIGID INSULATION. REFER TO DETAIL 13/S1.01 & 14 /S1.01 FOR MORE INFORMATION OF THE RAISED PLATFORM.
- THE CONTRACTOR SHALL ENSURE A MINIMUM **4-INCH** FLASHING CONDITION IN ACCORDANCE WITH THE ROOFING MANUFACTURER'S REQUIREMENTS.

FACILITY:
Arvin High School
900 Varsity Rd
Arvin, CA 93203

PROJECT:
KHSD Arvin High School ESSER III Phase 1 Roofing Project

SHEET NAME:
ROOF DETAILS

DSA SUBMITTAL

FILE NO.: **15-H3** A NO.: **03-123508**

DATE: **2023.07.25** CLIENT PROJ NO: **3566002103**

SHEET:

A10.40

BIM 360://3566002000 Arvin HS ESSER III/3566002000-A-KHSD Arvin HS Roof Replacement.rvt
3/19/2024 3:10:52 PM

PLEASE RECYCLE

THE LINE SHOWN ABOVE IS EXACTLY ONE INCH ON THIS SHEETS ORIGINAL PAGE SIZE

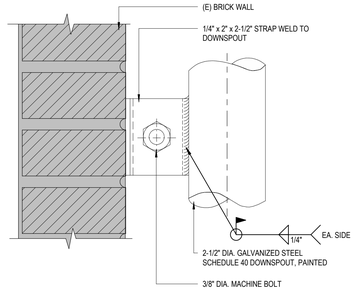

ELEVATION OF DOWNSPOUT AT BRICK WALL 25
6" = 1'-0"

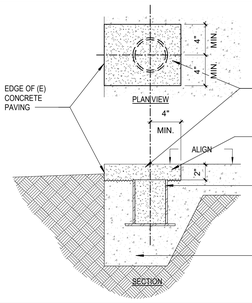

CUT COLUMN DETAIL 20
1 1/2" = 1'-0"

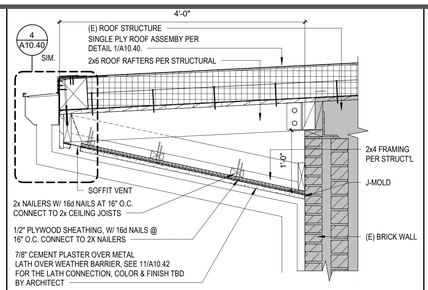

*SEE STRUCTURAL DETAIL 1/S1.01 FOR FASTENERS AND CONNECTIONS AND INFORMATION NOT SHOWN HERE

BLDG 5B - 7B - EAVE DETAIL 15
1" = 1'-0"

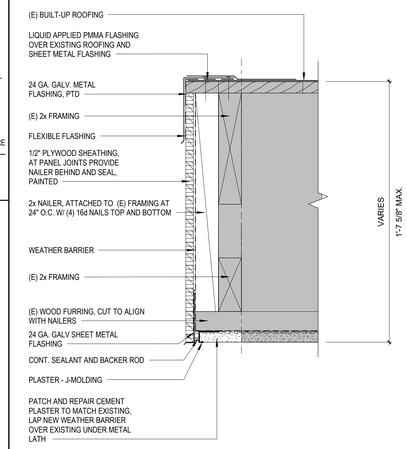

BLDG 2B - CANOPY FILLER PANEL 9
3" = 1'-0"

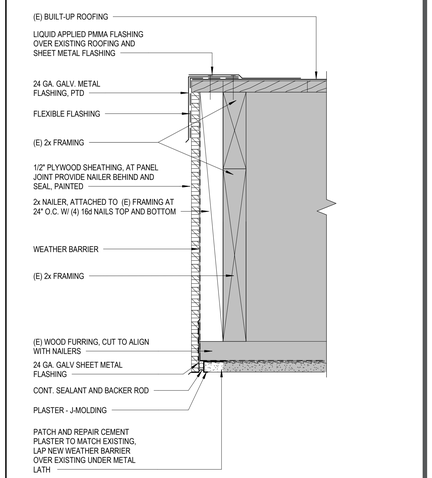

CANOPY CORRIDOR EDGE 4
3" = 1'-0"

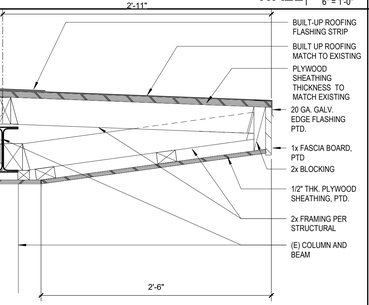

RE-FRAME AT WALKWAY ROOF EXTENSION ADJACENT TO BLDG 7B 23
1 1/2" = 1'-0"

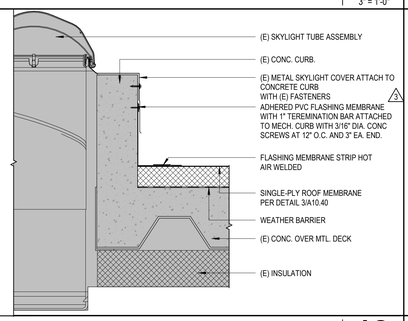

SKYLIGHT DETAIL@ BLDG 2A 18
1 1/2" = 1'-0"

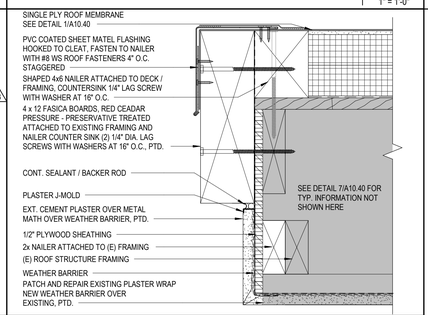

BLDG 5B EDGE CANOPY 13
3" = 1'-0"

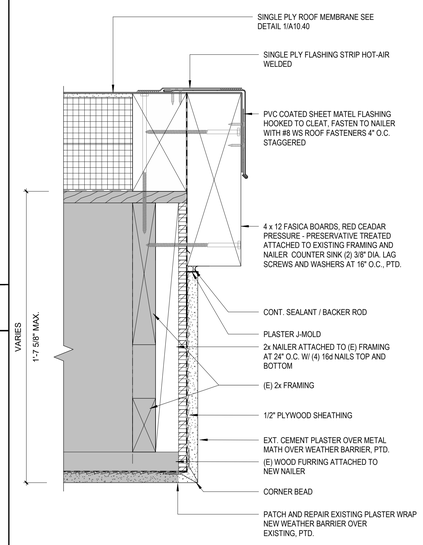

BLDG 2A - FLASHING DETAIL 2
3" = 1'-0"

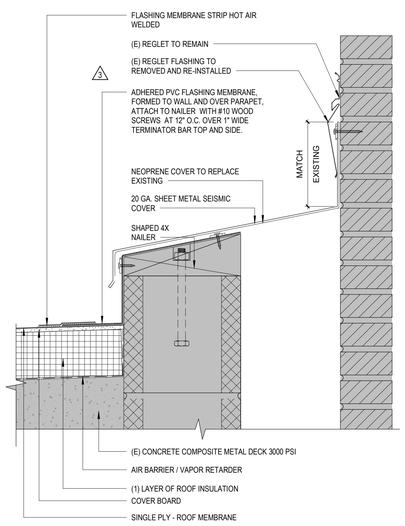

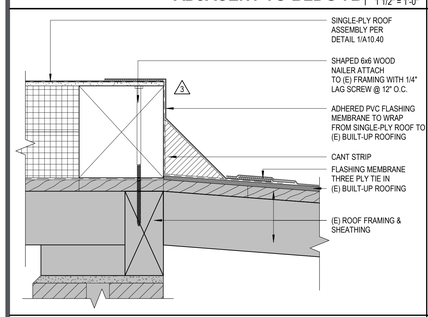

BLDG 7B - TRANSITION @ (N) ROOFING TO EXISTING ROOFING 22
3" = 1'-0"

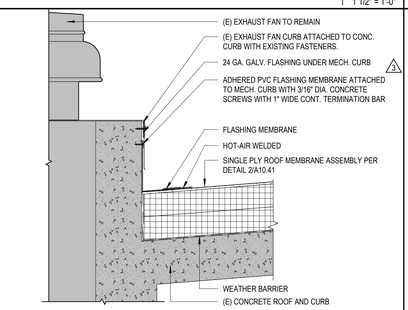

EXHAUST FAN CURB DETAIL 17
1 1/2" = 1'-0"

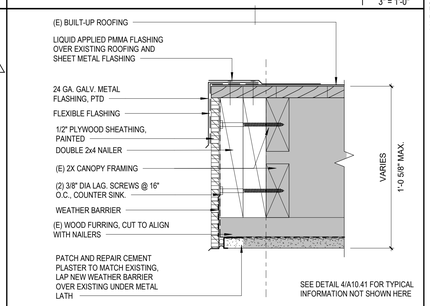

BLDG 2B/7B - CANOPY FILLER PANEL 12
3" = 1'-0"

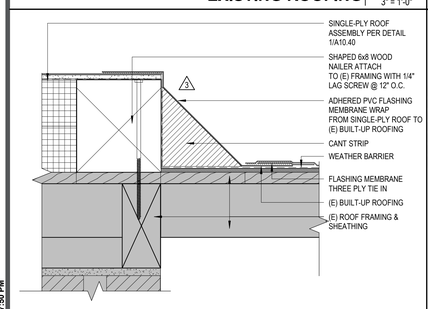

BLDG 7B - TRANSITION @ (N) ROOFING TO EXISTING ROOFING - FLAT ROOF 21
3" = 1'-0"

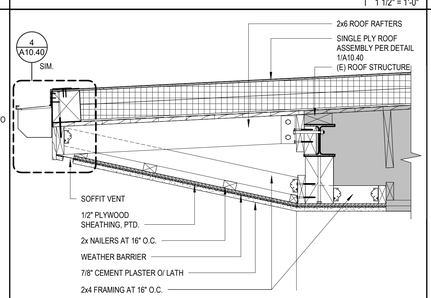

*SEE STRUCTURAL DETAL 2/S1.01 FOR FASTENERS AND CONNECTIONS AND INFORMATION NOT SHOWN HERE

BLDG 5B - 7B - EAVE DETAIL 16
1" = 1'-0"

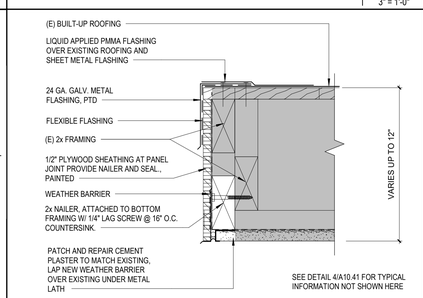

CANOPY EDGE END 11
3" = 1'-0"

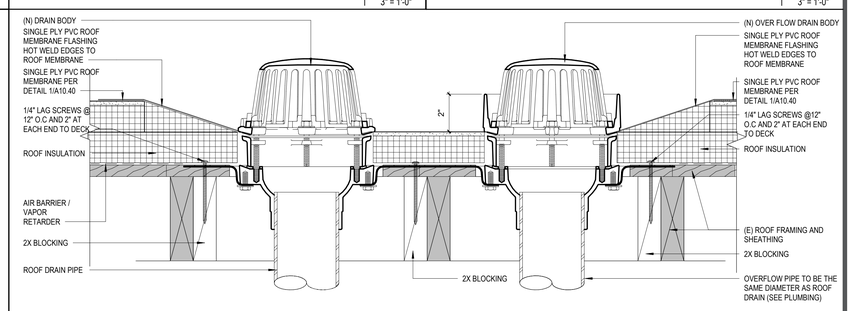

ROOF DRAIN 1
3" = 1'-0"

APPROVED
DIV. OF THE STATE ARCHITECT
APP#: 03-123508 INC:
REVIEWED FOR
SS ☑ FLS ☐ ACS ☐
DATE: 03/28/2024

KERN HIGH SCHOOL DISTRICT
Tradition of Excellence
Est. 1893

HMC Architects

3566-002-103

3546 CONCOURS STREET
ONTARIO, CA 91764
909 989 9979 / www.hmcarchitects.com

LICENSED ARCHITECT
VIRGINIA ELAINE MARQUARDT
No. C-33423
06/30/2025
STATE OF CALIFORNIA

ISSUE

Δ	DESCRIPTION	DATE
1	CCD_001	03/19/24
3	Addendum 03	11/30/23

KEYNOTES

NOTES

- THE CONTRACTOR NEEDS TO VERIFY A MINIMUM **8-INCH** HEIGHT CLEARANCE FOR HVAC UNITS, EXHAUST FANS, VENTS, PIPE PENETRATIONS, ETC., FOLLOWING THE INSTALLATION OF THE NEW RIGID INSULATION. REFER TO DETAIL 13/S1.01 & 14 /S1.01 FOR MORE INFORMATION OF THE RAISED PLATFORM.
- THE CONTRACTOR SHALL ENSURE A MINIMUM **4-INCH** FLASHING CONDITION IN ACCORDANCE WITH THE ROOFING MANUFACTURER'S REQUIREMENTS.

FACILITY:
Arvin High School
900 Varsity Rd
Arvin, CA 93203

PROJECT:
KHSD Arvin High School ESSER III Phase 1 Roofing Project

SHEET NAME:
ROOF DETAILS

DSA SUBMITTAL

FILE NO.: **15-H3** A NO.: **03-123508**

DATE: **2023.07.25** CLIENT PROJ NO: **3566002103**

SHEET:

A10.41

BIM 360:/3566002000 Arvin HS ESSER III/3566002000-A-KHSD Arvin HS Roof Replacement.rvt
3/19/2024 3:07:50 PM

PLEASE RECYCLE

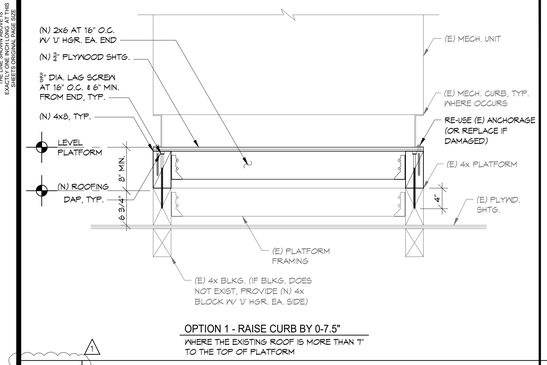

OPTION 1 - RAISE CURB BY 0-7.5"
WHERE THE EXISTING ROOF IS MORE THAN 7" TO THE TOP OF PLATFORM

13 EQUIPMENT ANCHORAGE DETAIL
1"=1'-0"

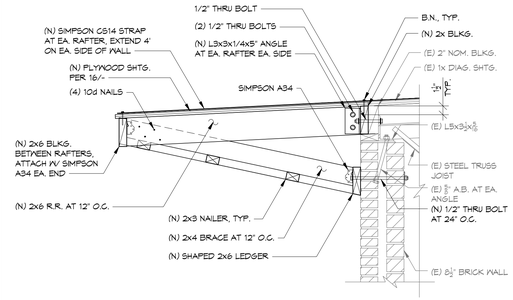

9 ROOF EAVE DETAIL AT STEEL TRUSS JOIST
1"=1'-0"

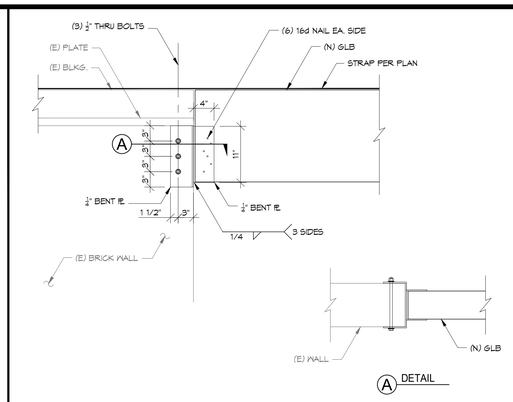

5 (N) WOOD BEAM TO (E) BRICK WALL CONNECTION
1"=1'-0"

NOTES:
1. FOR CONDITION WHERE STEEL TRUSS JOIST FRAMES INTO WALL, SEE 4/-

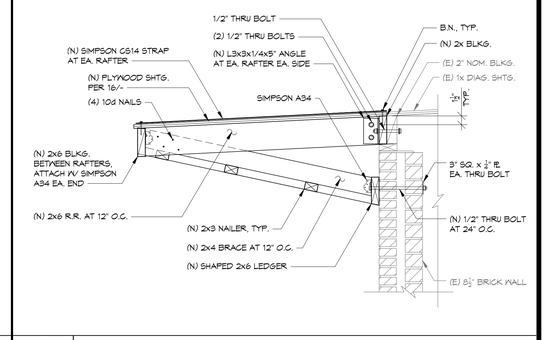

1 ROOF EAVE DETAIL
1"=1'-0"

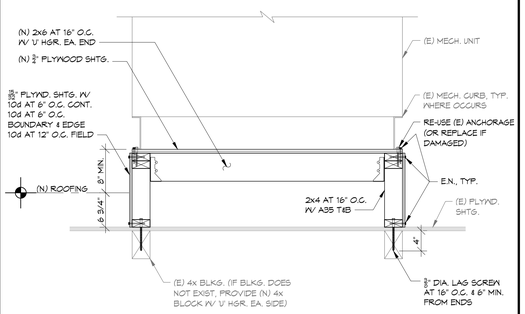

OPTION 2 - RAISE CURB BY MORE THAN 7.5"
WHERE THE EXISTING ROOF IS 7" OR LESS TO THE TOP OF PLATFORM

14 EQUIPMENT ANCHORAGE DETAIL
1"=1'-0"

10

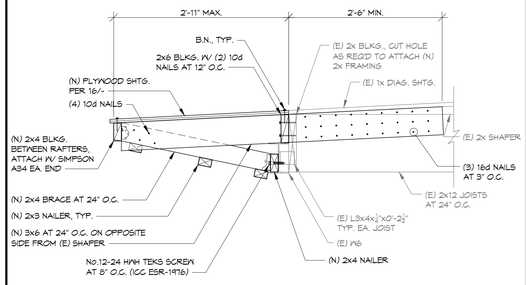

6 CANOPY DETAIL
1"=1'-0"

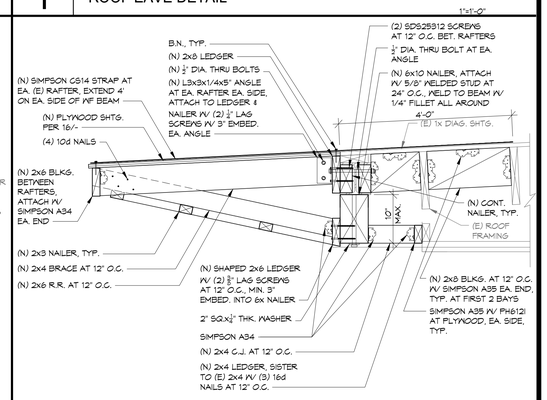

2 ROOF EAVE DETAIL
1"=1'-0"

15

11

NOTES:
1. SEE 1/A10.41 FOR ATTACHMENT DETAIL
2. ALL BLOCKING TO BE ATTACHED W/ SIMPSON 'U' HGR. EA. SIDE U.N.O.

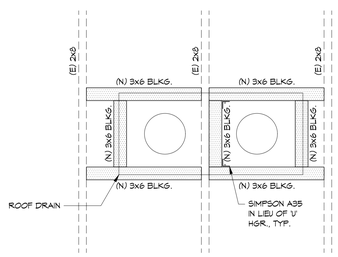

7 ROOF DRAIN BLOCKING
1"=1'-0"

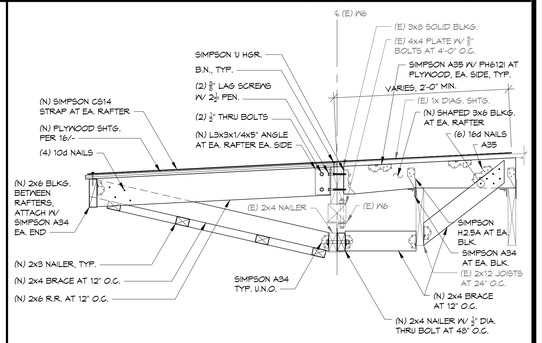

3 ROOF EAVE DETAIL
1"=1'-0"

NOTES:
1. SEE GENERAL NOTES FOR SHEATHING SPECIFICATIONS.
2. ALL NAILS SHALL BE FULL HEAD, COMMON WIRE NAILS.
3. INDIVIDUAL PLYWOOD SHEETS SHALL BE NOT LESS THAN 2'-0" IN LEAST DIMENSION NOR LESS THAN 8'-0" SQUARE FEET IN AREA. USE FULL SIZE SHEETS WHEREVER POSSIBLE.
4. PLACE PLYWOOD SHEETS WITH FACE PLIES PERPENDICULAR TO RAFTERS.
5. COORDINATE RAFTER LAYOUT WITH PLYWOOD PANEL LAYOUT PATTERN TO AVOID EXCESSIVE CUTTING OF SHEATHING.

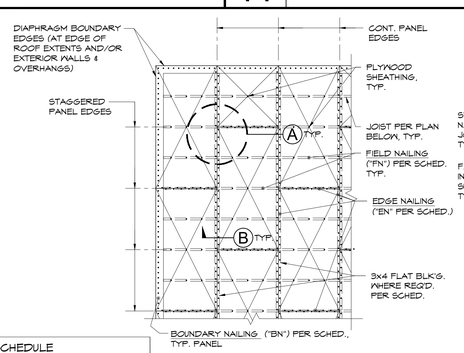

SHEATHING LAYOUT NAILING PLAN

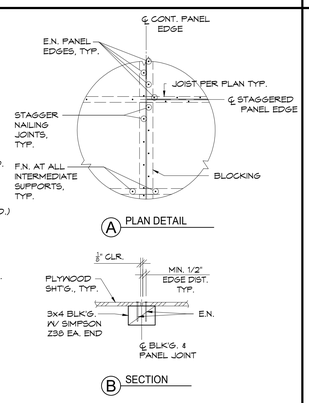

PLYWOOD SHEATHING & NAILING SCHEDULE

LEVEL	PANEL THICKNESS	CONT. E.N.	B.N.	OTHER PANEL EDGES	FIELD NAILING	BLOCKING
ROOF	15/32" TYP. U.N.O.	10d @ 6" O.C.	10d @ 6" O.C.	10d @ 6" O.C.	10d @ 12" O.C.	3x4 FLAT

16 TYPICAL PLYWOOD ROOF SHEATHING CONSTRUCTION
N.T.S.

8

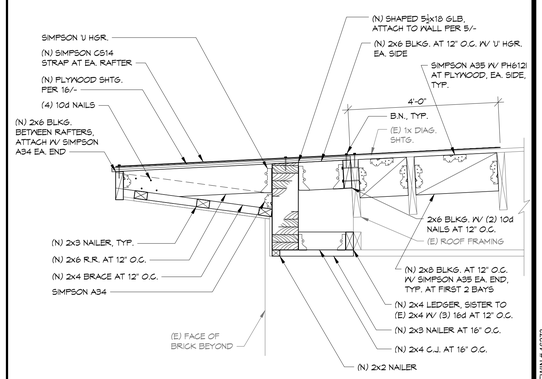

4 ROOF EAVE DETAIL
1"=1'-0"

APPROVED
DIV. OF THE STATE ARCHITECT
APP: 03-123508 INC.:
REVIEWED FOR
SS ☑ FLS ☐ ACS ☐
DATE: 03/28/2024

HMC Architects

3566-002-103

3546 CONCOURS STREET
ONTARIO, CA 91764
909 989 9979 / www.hmcarchitects.com

ISSUE

Δ	DESCRIPTION	DATE
2	ADDENDUM #2	11/30/2023
1	CCD 001	03/08/2024

KEYNOTES

HOHBACH-LEWIN, INC.
STRUCTURAL & CIVIL ENGINEERS
511 Mission Street
South Pasadena, CA 91030
(626) 441-1211

REGISTERED PROFESSIONAL ENGINEER
LESLIE ISO
Exp. 03-31-2025
STRUCTURAL
STATE OF CALIFORNIA

NOTES

KEY PLAN:

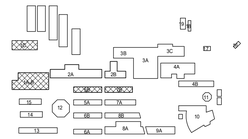

FACILITY:
Arvin High School
900 Varsity Rd
Arvin, CA 93203

PROJECT:
KHSD Arvin High School ESSER III Phase 1 Roofing Project

SHEET NAME:
DETAILS

DSA SUBMITTAL

FILE NO.: **15-H3** | A NO.: **03-123508**
DATE: **2023.07.25** | CLIENT PROJ NO: **3566002103**
SHEET:

S1.01

HOHBACH-LEWIN # 182773

3/12/2024 3:39 PM J:\16000-16499\16273\STRUCT\182735101.DWG

PLEASE RECYCLE

HMC ARCHITECTS
3546 Concours Street
Ontario, California 91764

06/25/2024

Arvin High School ESSER III Phase 1 Roofing

Kern High School District
HMC # 3566002103
File No: 15-H3 A#03-122508

CCD NO. 002B

The following changes, additions, deletions, or corrections shall become a part of the Contract Documents for the project named above and all other conditions shall remain the same. The Contractor shall be responsible for transmitting this information to all affected subcontractors and suppliers.

Purpose: Replacement of specified Sloan Flush Valves. Zurn Flush Valves are the KHSD fixture standard.

Item No.1. CCD # 002B: Narrative as follows:

The following Mechanical drawings are hereby issued: P0.00– "PLUMBING LEGENDS AND SCHEDULES" dated 2023/09/18.

1. **P0.00 - "PLUMBING LEGENDS AND SCHEDULES"**

   At Plumbing Fixture Schedule **REPLACE** specified Flush Valve "Sloan Royal 111-1.28", Exposed Manual Operated Flush Valve, with Zurn Exposed Sensor Flush Valve for water closets model ZER6000AV-SM, 1.28 GPF.as shown clouded by delta 2.

Item No.2. CCD # 002B: Narrative as follows:

The following Specification section is hereby amended: 22 40 00 - "PLUMBING FIXTURES."

2. **22 40 00 "PLUMBING FIXTURES"**

   At paragraph 2.02, **REPLACE** specified Flush Valve "Sloan Royal 111-1.28", Exposed Manual Operated Flush Valve, with Zurn Exposed Sensor Flush Valve for water closets model ZER6000AV-SM, 1.28 GPF.as shown clouded by delta 2.

REFERENCE ATTACHMENTS:
Drawing sheet P0.00, specifications section 22 40 00, sheet 3, valve specifications and cut sheet for reference.

HMC ARCHITECTS

By_____
(Signature of Architect of Record or Alternate)

1.05 SUBMITTALS

A. Section 01 30 00 – Administrative Requirements: Submittal Procedures

B. Manufacturer's Literature: Submit brochures on all materials and equipment to the Engineer.

C. Other Submittals:
1. Shop Drawings.
2. Sterilization Test Report.
3. Test Data.
4. Operations and Maintenance Manuals.
5. Record Drawings.

1.06 QUALITY ASSURANCE

A. Source Limitations: Obtain plumbing fixtures, faucets, and other components of each category through one source from a single manufacturer.
1. Exception: If fixtures, faucets, or other components are not available from a single manufacturer, obtain similar products from other manufacturers specified for that category.

PART 2 - PRODUCTS - Refer to sheet P0.00 Fixture and Equipment Schedules.

2.01 MANUFACTURERS

A. Flush Valves: As specified; refer to plumbing fixture schedule.

B. Plumbing Fixtures: As specified; refer to plumbing fixture schedule.

C. Toilet Seats: Church, Beneke, Olsonite

2.02 PLUMBING FIXTURES AND TRIMS

A. Water Closet (WC-1): Floor mounted, ADA compliant, flush valve.
1. Vitreous china, siphon jet action, elongated bowl, 1.28 gallon flush.
2. American Standard 3043.001 Madera
3. Solid plastic white open-front seat less cover: Olsonite 95SSCT
4. Flush Valve: Zurn Exposed sensor flush valve, ZER6000AV-SM, 1.28 GPF 1
5. Do not interfere flush valve with handle bar, see Architectural drawings.
6. Flush valve handle shall be on the wide side of stall.

PART 3 - EXECUTION

3.01 EXAMINATION

A. Examine roughing-in of water supply and sanitary drainage and vent piping systems to verify actual locations of piping connections before plumbing fixture installation.

Exposed Sensor Flush Valve for Water Closets

ZER6000AV-SM

TAG _____

ARCHITECTURAL & ENGINEERING SPECIFICATION

Exposed, quiet diaphragm-type, chrome plated flushometer valve with a polished exterior. Complete with chloramine resistant, dual seal diaphragm with a clog resistant, triple filtered by-pass. The valve incorporates a 6VDC motor actuator, a battery powered automatic sensor, chrome plated metal cover with manual override push button and 10 degree angled sensor.

PRODUCT FEATURES

- Control Stop has internal siphon-guard protection, sweat solder kit, wall flange with set screw.
- High back pressure Vacuum Breaker with one piece hex coupling nut
- Chloramine resistant Internal seals
- Clog resistant, triple filtered by pass
- Adjustable tailpiece
- Spud coupling and flange for top spud connection
- True mechincal override button

COMPLIANCE AND CERTIFICATION:

- ADA Compliant
- WaterSense Compliant

This product should be used with a WaterSense labeled counterpart with a compatible flow volume to ensure that the entire system meets the requirements for water efficiency and performance.

FLOW OPTIONS

	FLUSH VOLUME GPF	WATERSENSE COMPLIANT
☐ **-ONE**	1.1	✓
☑ **-HET**	1.28	✓
☐ **-WS1**	1.6	
☐ **-STANDARD**	3.5	

VALVE HEIGHT OPTIONS

	DIMENSION A INCH [MM]	DIMENSION B INCH [MM]
☑ **-STANDARD**	11 1/2" [292]	9 7/8" [251]
☐ **-1**	16" [406]	14 3/8" [365]
☐ **-2**	24" [610]	22 3/8" [568]
☐ **-3**	27" [686]	25 3/8" [645]

SUFFIX OPTIONS

☐ -YJ Split Ring Pipe Support

☐ -YK Solid Ring Pipe Support

ARCHITECTURAL & ENGINEERING APPROVAL

The information contained in this document is subject to change without notice. Please contact Zurn for most up to date information.

Rev. B | Date: 09/27/23 | C.N. No. 145571 | Prod./Dwg. No. SS ZER6000AV-SM

Rough-in/Overview dimensions:

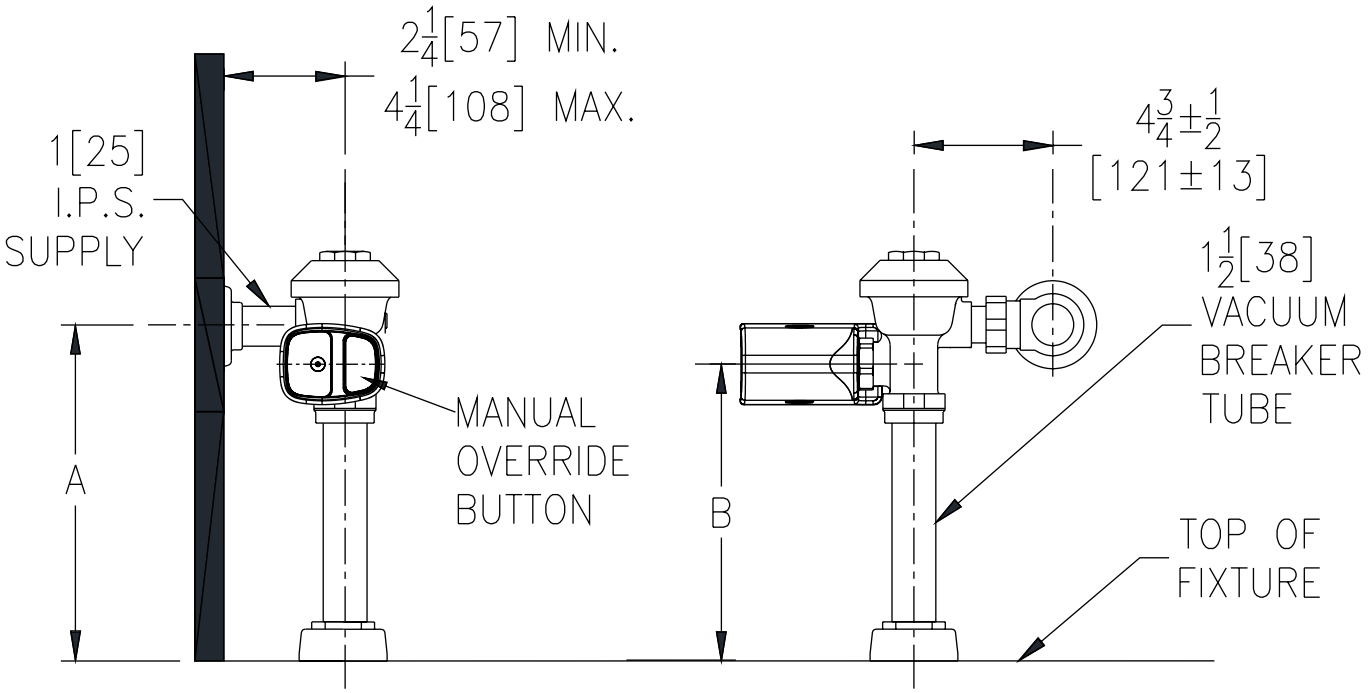

HMC ARCHITECTS
3546 Concours Street
Ontario, California 91764

July 1, 2024

Arvin High School ESSER III Phase 1 Roofing

Kern High School District
HMC # 3566002103
File No: 15-H3 A#03-122508

CCD NO. 003B

The following changes, additions, deletions, or corrections shall become a part of the Contract Documents for the project named above and all other conditions shall remain the same. The contractor shall be responsible for transmitting this information to all affected subcontractors and suppliers.

DRAWINGS:

The following revised drawings are hereby issued:

A4.30 BUILDING 2A & 2B – ROOF PLAN – DEMO. Dated 2023.09.18

A. At Keynotes, ADD Keynotes 2.49, 2.50, and 2.51 as noted and clouded per Delta 3.

B. At 1/A4.30 - Building 2A - Roof Plan - Demo, ADD Keynote References as shown and clouded per Delta 3.

A4.31 BUILDING 2A & 2B – ROOF PLAN – REMODEL. Dated 2023.09.18

A. At 1/A4.31 – Bldg 2A – Roof Plan – Remodel, ADD Details References as shown and clouded per Delta 3.

A10.42 ROOF DETAILS. Dated 08/28/23

A. **ADD** Details 8/A10.42 – Platform Edge and 12/10.42 – HVAC Mounting Detail to the Drawing Sheet as shown and clouded per Delta 3.

Attachments: Drawing Sheets A4.30, A4.31 and A10.42

HMC ARCHITECTS

By Virginia E Hargrandt
(Signature of Architect of Record or Alternate)

THE LINE SHOWN ABOVE IS EXACTLY 1" WHEN PLOTTED AT THIS SHEET'S ORIGINAL PAGE SIZE

KEYNOTES

02.49	(E) STEEL FRAME TO REMAIN.
02.50	(E) STEEL FRAME SUPPORT TO BE REMOVED.
02.51	(E) ROOF HATCH TO BE REMOVED. PATCH AND REPAIR ROOF DECK, COVER WITH NEW ROOFING.

3

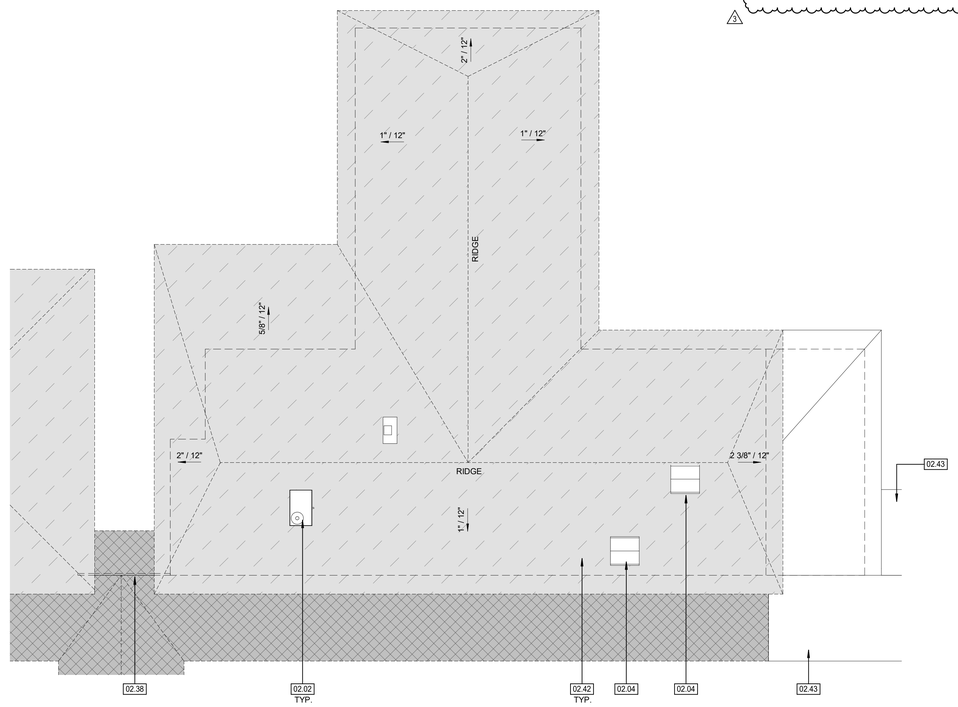

BLDG 2B - ROOF PLAN - DEMO

2

3/32" = 1'-0"

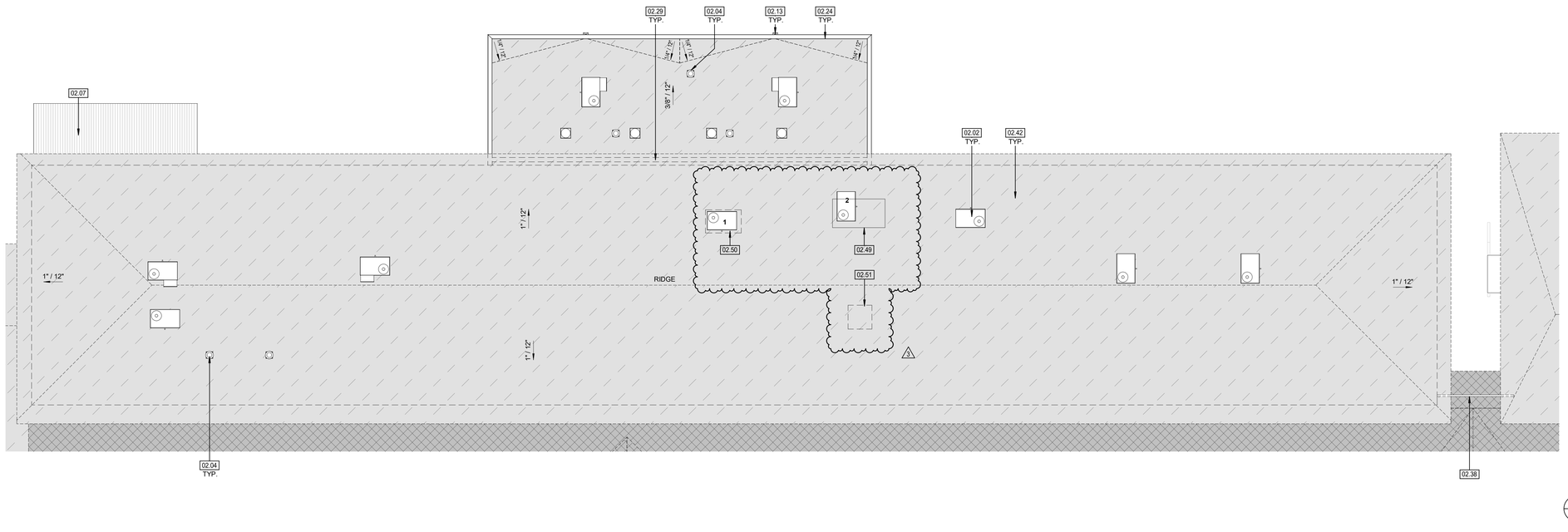

BLDG 2A - ROOF PLAN - DEMO

1

3/32" = 1'-0"

HMC Architects

3566-002-103

3546 CONCOURS STREET
ONTARIO, CA 91764
909 989 9979 / www.hmcarchitects.com

ISSUE

Δ	DESCRIPTION	DATE
3	CCD_003	6/20/2024

KEYNOTES

02.02	(E) HVAC UNIT AND CURB TO REMAIN, PROTECT IN PLACE, REPLACE CURB ROOF MEMBRANE FLASHING PER DETAILS 1/A10.41 AND 3/A10.41
02.04	(E) EXHAUST FAN AND CURB TO REMAIN, PROTECT IN PLACE; REPLACE CURB ROOF MEMBRANE FLASHING PER DETAILS 18/A10.40.
02.07	(E) METAL DECK ROOF TO REMAIN, PROTECT IN PLACE
02.13	(E) SCUPPER TO BE REMOVED, COLLECTOR HEAD TO BE REMOVED AND REMOUNTED.
02.24	(E) METAL COPING AND NAILER TO BE REMOVED.
02.29	(E) SHEET METAL EXPANSION JOINT COVER, NEOPRENE COVER AND WOOD NAILER TO BE REMOVED.
02.38	(E) BEAM TO REMAIN, PAINT.
02.42	PROTECT ALL EXISTING UTILITIES DURING ROOF DEMOLITION AND RE-ROOFING. CONTRACTOR TO WALK THE JOB PRIOR TO BID.
02.43	(E) COVERED WALKWAY TO REMAIN. PROTECT IN PLACE.

LEGEND - ENLARGED ROOF PLANS

- EXISTING BUILT-UP ROOFING MATERIAL TO BE REMOVED, EXISTING SHEATHING TO REMAIN, SHEATHING TO BE INSPECTED FOR DRY ROT, TERMITE, AND MOISTURE DAMAGE. NOTIFY ARCHITECT IF DAMAGE IS FOUND. **EXTENTS AND ANY REPAIR OF ROOF SHEATHING SHALL BE PERFORMED BY A CONSTRUCTION CHANGE DOCUMENT (CCD), APPROVED BY DSA.** PREP ROOF SHEATHING FOR NEW PVC ROOF MEMBRANE ASSEMBLY.
- EXISTING CANOPY TO BE REMOVED. SEE A3.10 FOR START AND ENDING LOCATONS OF REMOVAL.
- NEW SINGLE PLY PVC ROOFING CLASS-A, SEE DETAIL 1, 2 OR 3 ON SHEET A10.40 FOR ROOF ASSEMBLY
- EXISTING BUILT-UP ROOFING TO REMAIN
- ROOF WALKWAY PADS
- NEW BUILT UP ROOFING TO PATCH REPAIR NEW FRAMING
- (N) OVERHANG EXTENSION

1. ALL ROOFING MATERIAL INCLUDING MEMBRANE, FLASHING, EDGES, GUTTERS, MECHANICAL EQUIPMENT CURBS FLASHING, EXHAUST FANS, SKYLIGHTS AND ALL PIPE / CONDUIT PENETRATIONS TO BE INSTALLED PER MANUFACTURER REQUIREMENTS. SEE SHEET A10.40 AND A10.41 TYPICAL ROOFING DETAILS.
2. REFER TO PLUMBING AND ELECTRICAL DRAWINGS FOR ADDITIONAL SCOPE NOT SHOWN.
3. NO WORK, INCLUDING DEMOLITION, SHALL BEGIN UNTIL PLANS AND SPECIFICATIONS HAVE BEEN APPROVED BY DSA.
4. (E) UTILITIES ON THE ROOF TO BE PROTECTED DURING DEMOLITION AND INSTALLATION OF ROOFING MEMBRANE. CONTRACTOR TO WALK THE JOB PRIOR TO BID.

KEY PLAN:

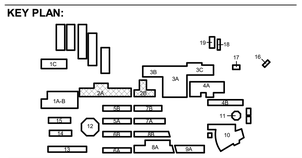

FACILITY:

Arvin High School
900 Varsity Rd
Arvin, CA 93203

PROJECT:

KHSD Arvin High School ESSER III Phase 1 Roofing Project

SHEET NAME:

BLDG 2A & 2B - ROOF PLAN - DEMO

DSA SUBMITTAL

FILE NO.: 15-H3	**A NO.: 03-123508**
DATE: **2023.07.25**	CLIENT PROJ NO: **3566002103**

SHEET:

A4.30

BIM 360://3566002000 Arvin HS ESSER III/3566002000-A-KHSD Arvin HS Roof Replacement.rvt
6/21/2024 2:54:28 PM

PLEASE RECYCLE

THE LINE SHOWN ABOVE IS EXACTLY ONE INCH LONG AT THIS SHEETS ORIGINAL PAGE SIZE

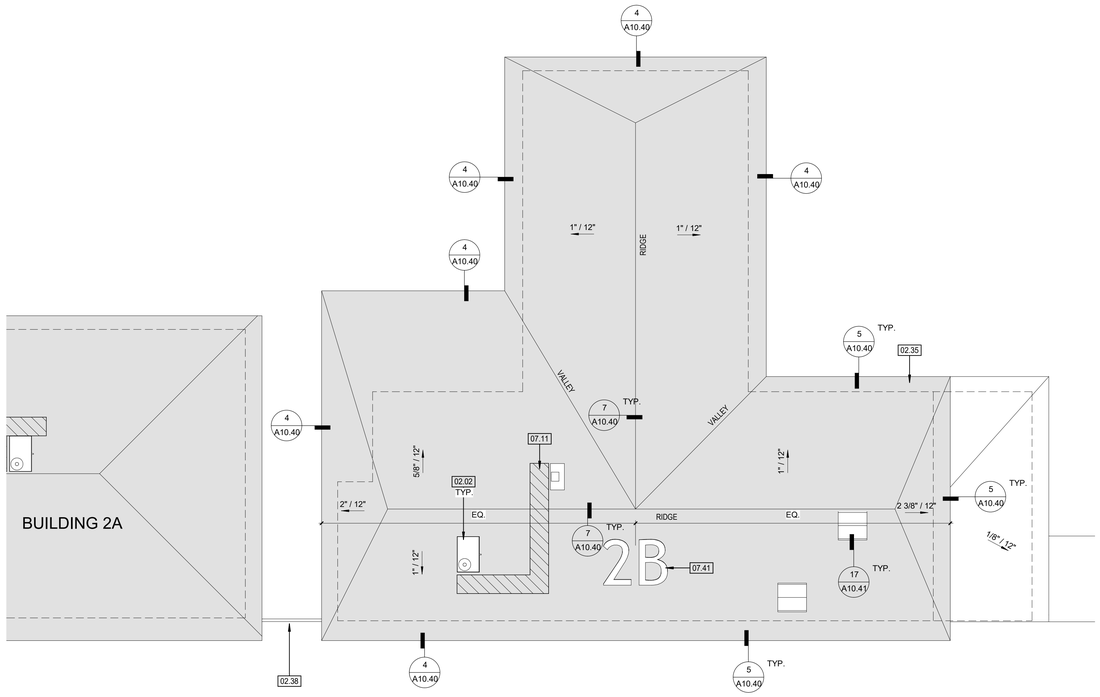

BLDG 2B - ROOF PLAN - REMODEL

2

3/32" = 1'-0"

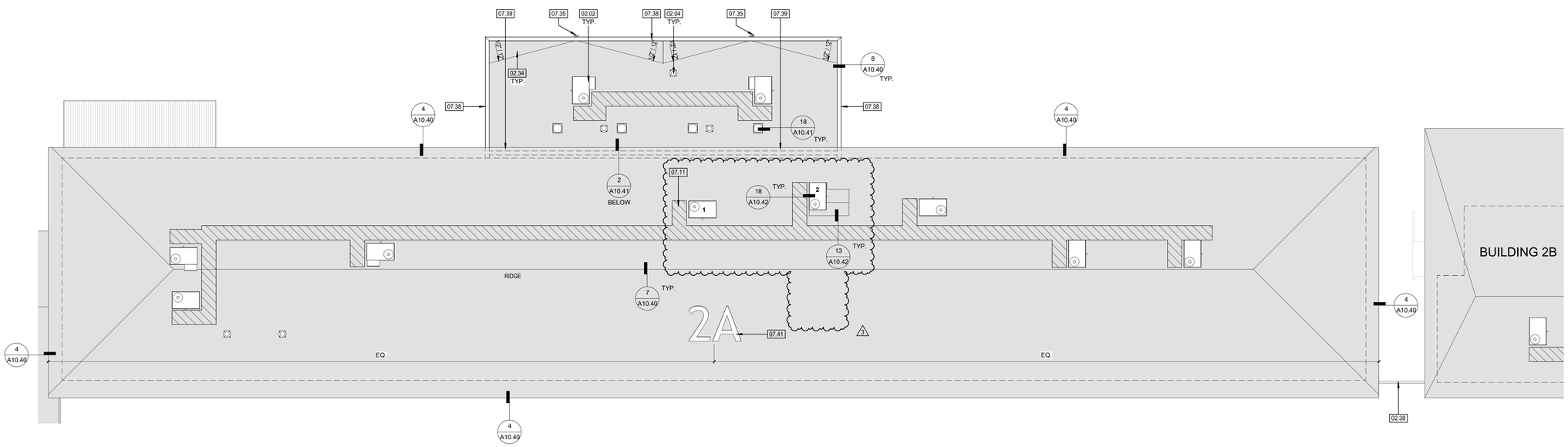

BLDG 2A - ROOF PLAN- REMODEL

1

3/32" = 1'-0"

PLEASE RECYCLE ♻

BIM 360://3566002000 Arvin HS ESSER III/3566002000-A-KHSD Arvin HS Roof Replacement.rvt
6/21/2024 2:54:28 PM

HMC Architects

3566-002-103

3546 CONCOURS STREET
ONTARIO, CA 91764
909 989 9979 / www.hmcarchitects.com

ISSUE

Δ	DESCRIPTION	DATE
3	CCD_003	6/20/2024

KEYNOTES

02.02	(E) HVAC UNIT AND CURB TO REMAIN, PROTECT IN PLACE, REPLACE CURB ROOF MEMBRANE FLASHING PER DETAILS 1/A10.41 AND 3/A10.41
02.04	(E) EXHAUST FAN AND CURB TO REMAIN, PROTECT IN PLACE; REPLACE CURB ROOF MEMBRANE FLASHING PER DETAILS 18/A10.40.
02.34	(E) CRICKETS TO REMAIN. PROTECT IN PLACE.
02.35	(E) CONCRETE ROOF STRUCTURE
02.38	(E) BEAM TO REMAIN, PAINT.
07.11	ROOF WALKWAY PADS, REFER TO SPEC. SECTION 07 54 19.30
07.35	THRU-WALL SCUPPER 11&12 / A10.41
07.38	SHEET METAL COPING AND WOOD NAILER
07.39	SHEET METAL EXPANSION JOINT COVER, NEOPRENE COVER AND WOOD NAILER
07.41	ROOF GRAPHIC MEMBRANE.

LEGEND - ENLARGED ROOF PLANS

▨	EXISTING BUILT-UP ROOFING MATERIAL TO BE REMOVED, EXISTING SHEATHING TO REMAIN, SHEATHING TO BE INSPECTED FOR DRY ROT, TERMITE, AND MOISTURE DAMAGE. NOTIFY ARCHITECT IF DAMAGE IS FOUND. **EXTENTS AND ANY REPAIR OF ROOF SHEATHING SHALL BE PERFORMED BY A CONSTRUCTION CHANGE DOCUMENT (CCD), APPROVED BY DSA.** PREP ROOF SHEATHING FOR NEW PVC ROOF MEMBRANE ASSEMBLY.
▩	EXISTING CANOPY TO BE REMOVED. SEE A3.10 FOR START AND ENDING LOCATONS OF REMOVAL.
▦	NEW SINGLE PLY PVC ROOFING CLASS-A, SEE DETAIL 1, 2 OR 3 ON SHEET A10.40 FOR ROOF ASSEMBLY
□	EXISTING BUILT-UP ROOFING TO REMAIN
▧	ROOF WALKWAY PADS
▦	NEW BUILT UP ROOFING TO PATCH REPAIR NEW FRAMING
▨	(N) OVERHANG EXTENSION

1. ALL ROOFING MATERIAL INCLUDING MEMBRANE, FLASHING, EDGES, GUTTERS, MECHANICAL EQUIPMENT CURBS FLASHING, EXHAUST FANS, SKYLIGHTS AND ALL PIPE / CONDUIT PENETRATIONS TO BE INSTALLED PER MANUFACTURER REQUIREMENTS. SEE SHEET A10.40 AND A10.41 TYPICAL ROOFING DETAILS.
2. REFER TO PLUMBING AND ELECTRICAL DRAWINGS FOR ADDITIONAL SCOPE NOT SHOWN.
3. NO WORK, INCLUDING DEMOLITION, SHALL BEGIN UNTIL PLANS AND SPECIFICATIONS HAVE BEEN APPROVED BY DSA.
4. (E) UTILITIES ON THE ROOF TO BE PROTECTED DURING DEMOLITION AND INSTALLATION OF ROOFING MEMBRANE. CONTRACTOR TO WALK THE JOB PRIOR TO BID.

KEY PLAN:

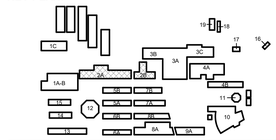

FACILITY:

Arvin High School
900 Varsity Rd
Arvin, CA 93203

PROJECT:

KHSD Arvin High School ESSER III Phase 1 Roofing Project

SHEET NAME:

BLDG 2A & 2B - ROOF PLAN - REMODEL

DSA SUBMITTAL

FILE NO.: 15-H3 **A NO.: 03-123508**

DATE: **2023.07.25** CLIENT PROJ NO: **3566002103**

SHEET:

A4.31

THE LINE SHOWN ABOVE IS EXACTLY ONE INCH ON ANSI E SHEETS ORIGINAL PAGE SIZE

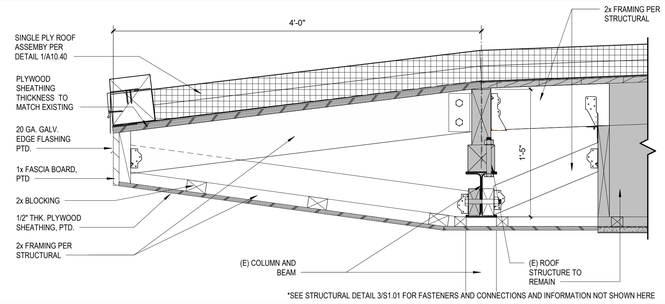

*SEE STRUCTURAL DETAIL 3/S1.01 FOR FASTENERS AND CONNECTIONS AND INFORMATION NOT SHOWN HERE

RE-FRAME AT WALKWAY ROOF EXTENSION ADJACENT TO BLDG 7B — 5

1 1/2" = 1'-0"

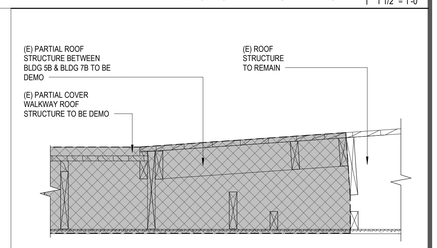

(E) BLDG 5B & BLDG 7B - COVER WALKWAY DEMO DETAIL — 4

1" = 1'-0"

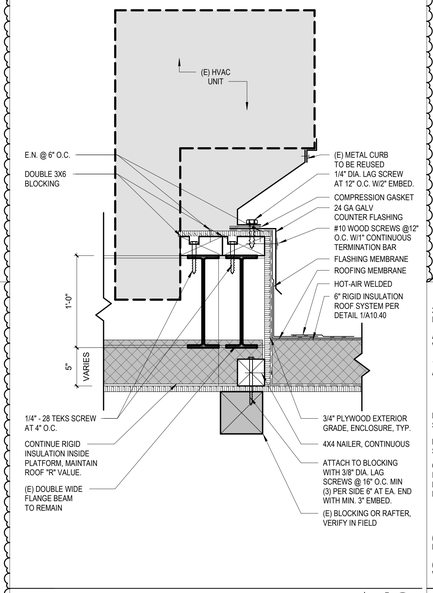

HVAC MOUNTING DETAIL — 18

1 1/2" = 1'-0"

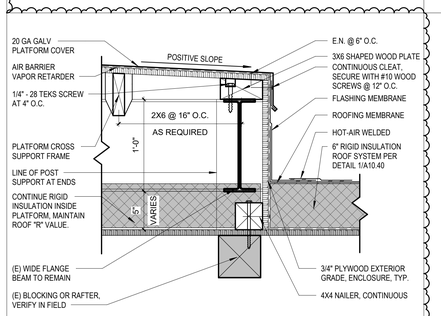

PLATFORM EDGE — 13

1 1/2" = 1'-0"

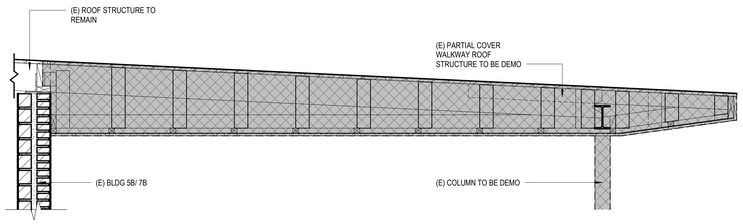

BLDG 5B & 7B - COVER WALKWAY DEMO DETAIL — 3

3/4" = 1'-0"

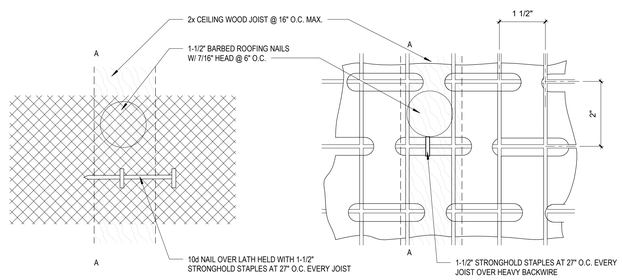

REFLECTED CEILING PLAN

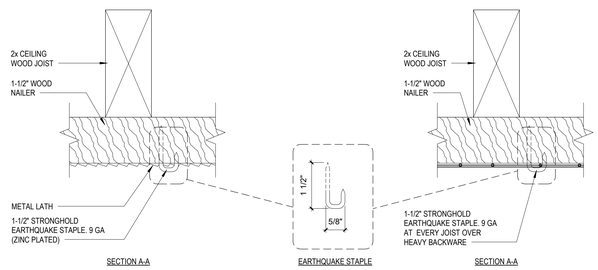

LATH CONNECTION TO WOOD JOISTS — 11

6" = 1'-0"

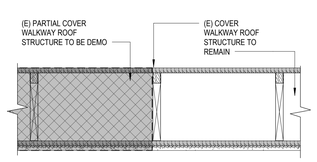

(E) COVER WALKWAY END CONDITION - DEMO DETAIL — 7

1" = 1'-0"

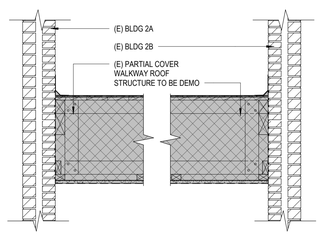

(E) BLDG 2A & BLDG 2B - COVER WALKWAY DEMO DETAIL — 2

3/4" = 1'-0"

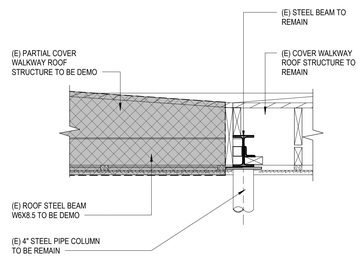

(E) BLDG 5B & 7B - COVER WALKWAY END - DEMO DETAIL — 6

1" = 1'-0"

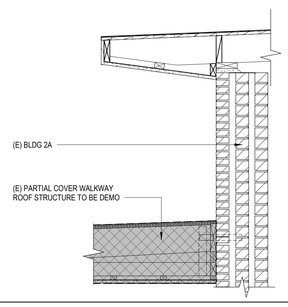

(E) BLDG 2A - COVER WALKWAY DEMO DETAIL — 1

3/4" = 1'-0"

HMC Architects

3566-002-103

3546 CONCOURS STREET
ONTARIO, CA 91764
909 989 9979 / www.hmcarchitects.com

ISSUE

Δ	DESCRIPTION	DATE
3	CCD_003	6/20/2024

KEYNOTES

NOTES

FACILITY:
Arvin High School
900 Varsity Rd
Arvin, CA 93203

PROJECT:
KHSD Arvin High School ESSER III Phase 1 Roofing Project

SHEET NAME:
ROOF DETAILS

DSA SUBMITTAL

FILE NO.: 15-H3 | A NO.: 03-123508
DATE: 08/28/23 | CLIENT PROJ NO: 3566002103
SHEET:

A10.42

BIM 360://3566002000 Arvin HS ESSER III/3566002000-A-KHSD Arvin HS Roof Replacement.rvt
6/21/2024 4:02:55 PM

PLEASE RECYCLE

HMC ARCHITECTS
3546 Concours Street
Ontario, California 91764

APPROVED
DIV. OF THE STATE ARCHITECT
APP: 03-123508 INC:
REVIEWED FOR
SS ☑ FLS ☐ ACS ☐
DATE: 09/03/2024

August 29, 2024

Arvin High School ESSER III Phase 1 Roofing
Kern High School District
HMC # 3566002103
File No: 15-H3 A#03-123508

CCDA-004

The following changes, additions, deletions, or corrections shall become a part of the Contract Documents for the project named above and all other conditions shall remain the same. The contractor shall be responsible for transmitting this information to all affected subcontractors and suppliers.

Purpose: Modifications of structural eave details of buildings 5B and 7B, due to field structural conditions at variance with the recorded As Built drawings, as well as support degradations occurring at the passageway between the buildings.

DRAWINGS:

Item No. CCD-4.1: Reference Revised Drawings

The following revised Structural Drawings Sheets are hereby issued:

S1.01 – DETAILS.

A. At detail 1/S1.01 **MODIFY** Detail as clouded per Delta 4.
B. At detail 5/S1.01 **ADD** HSS4x4x1/4 support and **MODIFY** Detail as clouded per Delta 4.
C. **ADD** Detail 8/S1.01 as clouded by delta 4.
D. At detail 9/S1.01 **MODIFY** Detail as clouded per Delta 4.

S2.11 – BUILDINGS 5B, 7B, & 8A ROOF FRAMING PLANS

A. At 14/S2.11—" Bldg 5B & 7B ROOF FRAMING PLANS", **MODIFY** Passageway framing supports as clouded per Delta 4.

Drawing Sheets: S1.01 and S2.11

HMC ARCHITECTS

By Virginia E Marquardt
Virginia Marquardt, AIA Principal in Charge

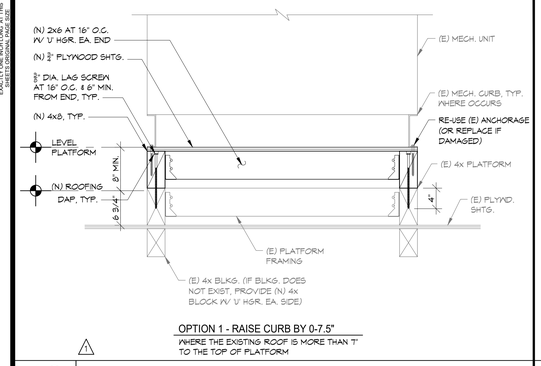

OPTION 1 - RAISE CURB BY 0-7.5"
WHERE THE EXISTING ROOF IS MORE THAN 7" TO THE TOP OF PLATFORM

13 EQUIPMENT ANCHORAGE DETAIL

1"=1'-0"

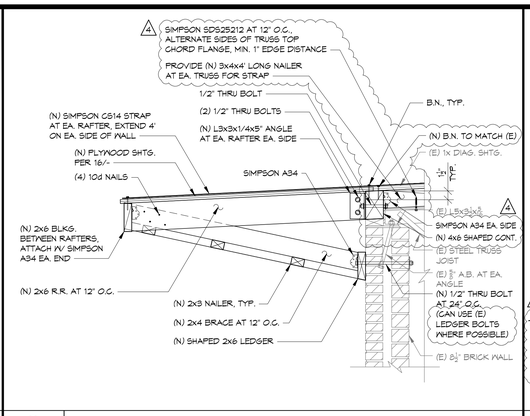

9 ROOF EAVE DETAIL AT STEEL TRUSS JOIST

1"=1'-0"

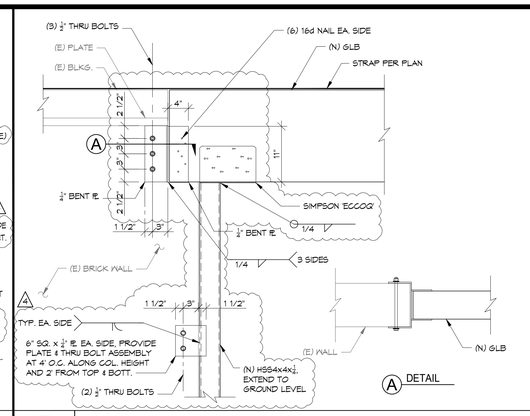

5 (N) WOOD BEAM TO (E) BRICK WALL CONNECTION

1"=1'-0"

NOTES:
1. FOR CONDITION WHERE STEEL TRUSS JOIST FRAMES INTO WALL, SEE 4/-

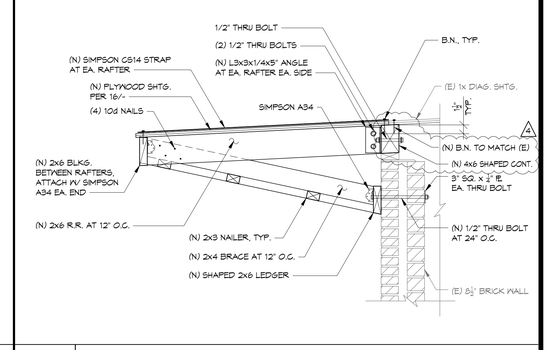

1 ROOF EAVE DETAIL

1"=1'-0"

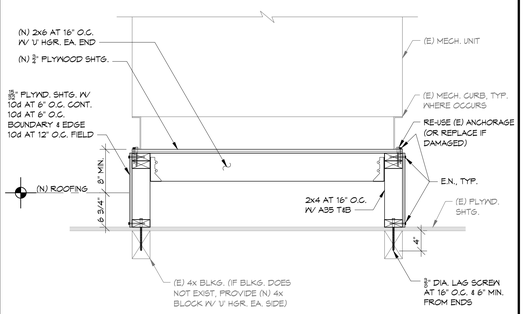

OPTION 2 - RAISE CURB BY MORE THAN 7.5"
WHERE THE EXISTING ROOF IS 7" OR LESS TO THE TOP OF PLATFORM

14 EQUIPMENT ANCHORAGE DETAIL

1"=1'-0"

10

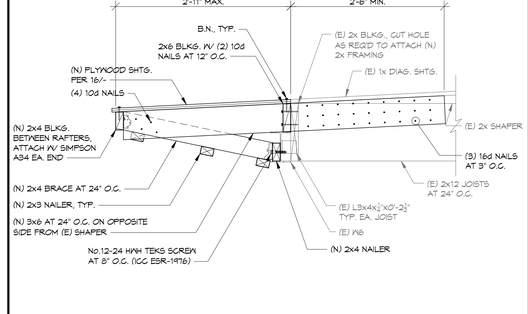

6 CANOPY DETAIL

1"=1'-0"

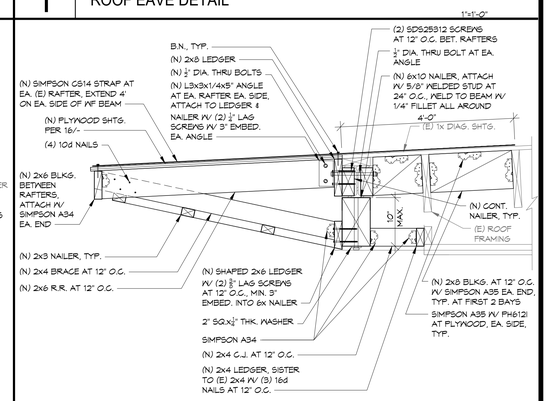

2 ROOF EAVE DETAIL

1"=1'-0"

15

11

NOTES:
1. SEE 1/A10.41 FOR ATTACHMENT DETAIL
2. ALL BLOCKING TO BE ATTACHED W/ SIMPSON 'U' HGR. EA. SIDE U.N.O.

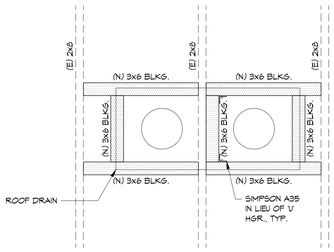

7 ROOF DRAIN BLOCKING

1"=1'-0"

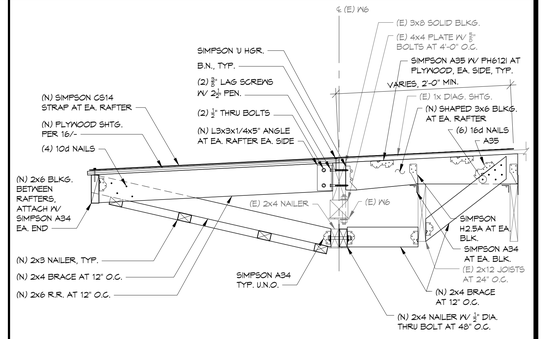

3 ROOF EAVE DETAIL

1"=1'-0"

NOTES:
1. SEE GENERAL NOTES FOR SHEATHING SPECIFICATIONS.
2. ALL NAILS SHALL BE FULL HEAD, COMMON WIRE NAILS.
3. INDIVIDUAL PLYWOOD SHEETS SHALL BE NOT LESS THAN 2'-0" IN LEAST DIMENSION NOR LESS THAN 0'-0" SQUARE FEET IN AREA. USE FULL SIZE SHEETS WHEREVER POSSIBLE.
4. PLACE PLYWOOD SHEETS WITH FACE PLIES PERPENDICULAR TO RAFTERS.
5. COORDINATE RAFTER LAYOUT WITH PLYWOOD PANEL LAYOUT PATTERN TO AVOID EXCESSIVE CUTTING OF SHEATHING.

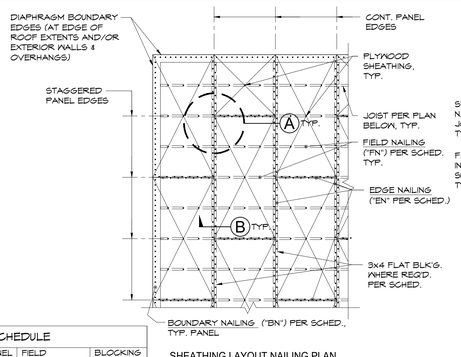

SHEATHING LAYOUT NAILING PLAN

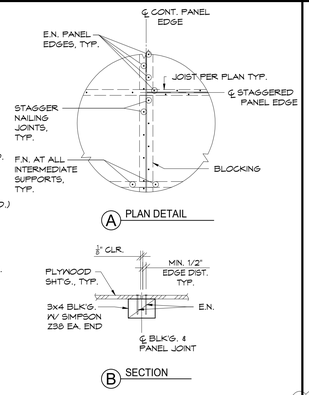

PLYWOOD SHEATHING & NAILING SCHEDULE

LEVEL	PANEL THICKNESS	CONT. E.N.	B.N.	OTHER PANEL EDGES	FIELD NAILING	BLOCKING
ROOF	15/32" TYP. U.N.O.	10d @ 6" O.C.	10d @ 6" O.C.	10d @ 6" O.C.	10d @ 12" O.C.	3x4 FLAT

16 TYPICAL PLYWOOD ROOF SHEATHING CONSTRUCTION

N.T.S.

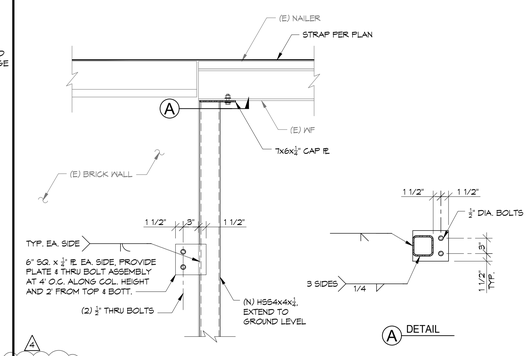

8 (E) WF BEAM TO (N) COLUMN CONNECTION

1"=1'-0"

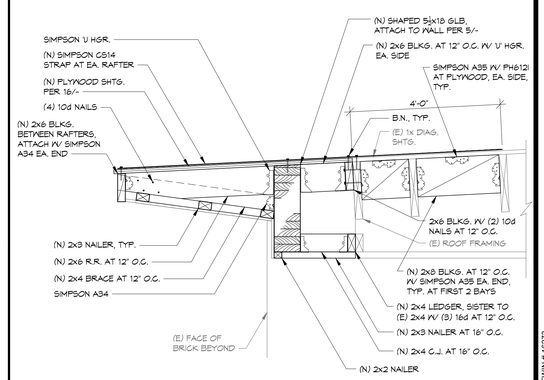

4 ROOF EAVE DETAIL

1"=1'-0"

8/28/2024 2:53 PM J:\18000-19499\18273\STRUCT\18273S101.DWG

PLEASE RECYCLE

HOHBACH-LEWIN # 18273

AGENCY APPROVAL:

APPROVED DIV. OF THE STATE ARCHITECT APP: 03-123508 INC.: REVIEWED FOR SS ☑ FLS ☐ ACS ☐ DATE: 09/03/2024

HMC Architects
3566-002-000
3546 CONCOURS STREET
ONTARIO, CA 91764
909 989 9979 / www.hmcarchitects.com

NOT FOR CONSTRUCTION

Δ	DESCRIPTION	DATE
2	ADDENDUM #2	11/30/2023
1	CCD 001	03/08/2024
4	CCD 004A	08/28/2024

KEYNOTES

HOHBACH-LEWIN, INC.
STRUCTURAL & CIVIL ENGINEERS
511 Mission Street
South Pasadena, CA 91030
(626) 441-1211

REGISTERED PROFESSIONAL ENGINEER LESLIE ISOM 3-30-79 Exp. 03-31-2025 STRUCTURAL STATE OF CALIFORNIA

NOTES

KEY PLAN:

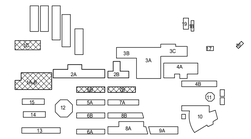

FACILITY:
Arvin High School
900 Varsity Rd
Arvin, CA 93203

PROJECT:
KHSD Arvin High School ESSER III Phase 1 Roofing Project

SHEET NAME:
DETAILS

FILE NO.: **15-H3** A NO.: **03-XXXXXX**
DATE: **03/29/23** CLIENT PROJ NO: **3566002000**
SHEET:

S1.01

THE LINE SHOWN ABOVE IS 6 INCHES LONG WHEN PLOTTED ON ANSI SIZE E ORIGINAL IMAGE SIZE

ROOF FRAMING PLAN NOTES:

1. PROVIDE 15/32" PLYWOOD SHEATHING OVER ALL (N) ROOF FRAMING PER 16/S1.01.
2. — · · · — · · · — INDICATES STRAP

(X,X) INDICATES LENGTH ON EITHER SIDE OF CONNECTION

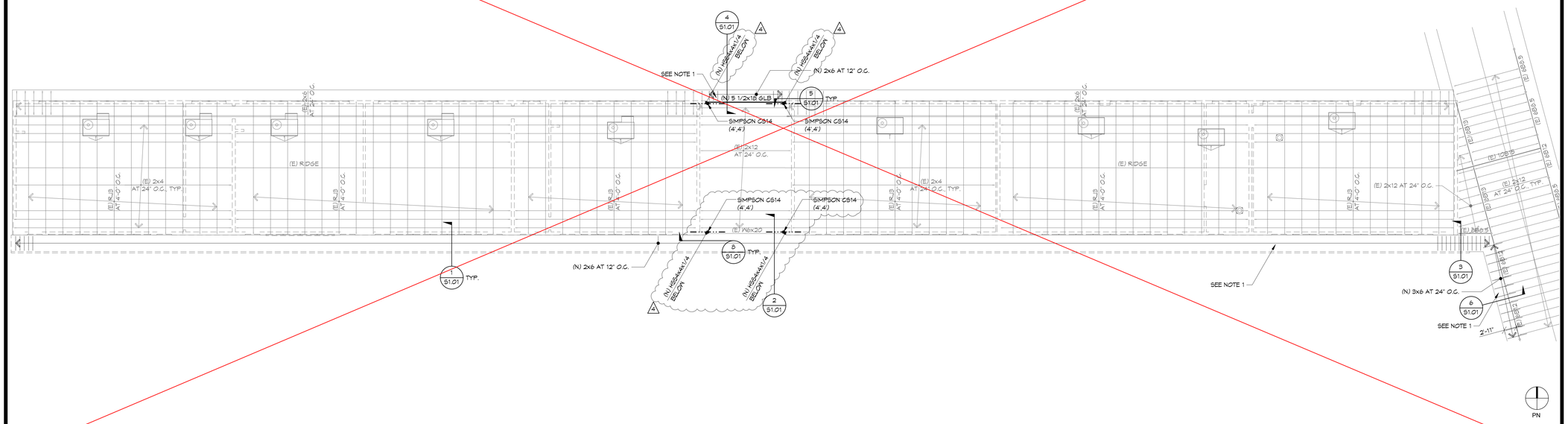

14 BLDG 5B & 7B ROOF FRAMING PLANS

3/32"=1'-0"

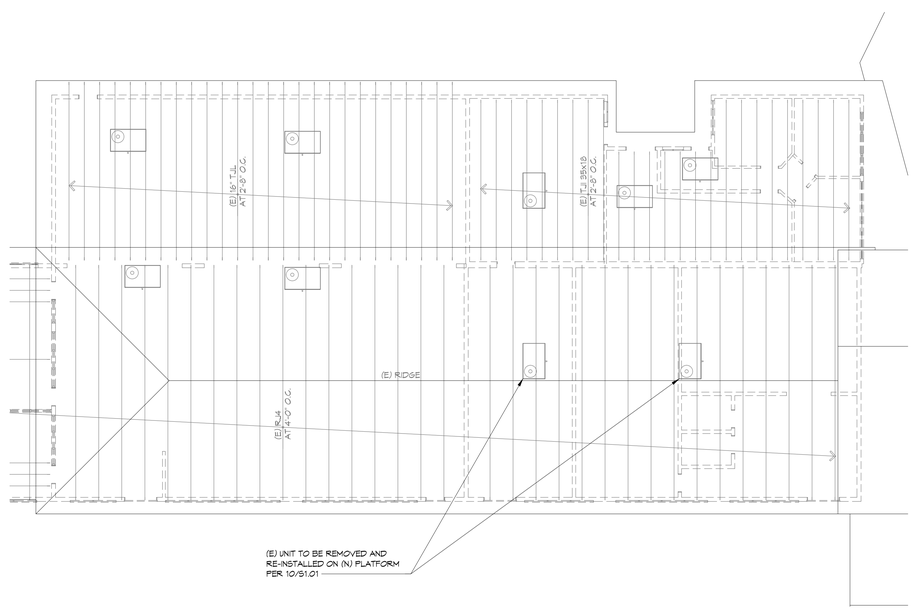

16 BLDG 8A ROOF FRAMING PLAN

3/32"=1'-0"

AGENCY APPROVAL:

APPROVED
DIV. OF THE STATE ARCHITECT
APP#: 03-123608 INC.:
REVIEWED FOR
SS ☑ FLS ☐ ACS ☐
DATE: 09/03/2024

KERN HIGH SCHOOL DISTRICT — Tradition of Excellence — Est. 1893

HMC Architects

3566-002-000

NOT FOR CONSTRUCTION

3546 CONCOURS STREET
ONTARIO, CA 91764
909 989 9979 / www.hmcarchitects.com

Δ	DESCRIPTION	DATE
2	ADDENDUM #2	11/30/2023
4	CCD 004A	08/28/2024

KEYNOTES

HOHBACH-LEWIN, INC.
STRUCTURAL & CIVIL ENGINEERS
511 Mission Street
South Pasadena, CA 91030
(626) 441-1211

REGISTERED PROFESSIONAL ENGINEER — ESLIE ISON — 3-30-24 — Exp. 03-31-2025 — STRUCTURAL — STATE OF CALIFORNIA

NOTES

KEY PLAN:

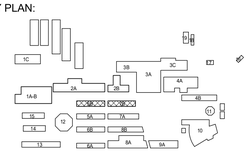

FACILITY:
Arvin High School
900 Varsity Rd
Arvin, CA 93203

PROJECT:
KHSD Arvin High School ESSER III Phase 1 Roofing Project

SHEET NAME:
BLDG 5B, 7B & 8A ROOF FRAMING PLANS

FILE NO.: 15-H3 | **A NO.: 03-XXXXXX**
DATE: **03/29/23** | CLIENT PROJ NO: **3566002000**
SHEET:

S2.11

8/28/2024 2:15 PM J:\18000-19499\18273\STR\CT\18273S211DWG

HOHBACH-LEWIN # 18273

PLEASE RECYCLE